# Errata

**Title & Document Type:** 4192A LF Impedance Analyzer Operating and Service Manual

**Manual Part Number:** 04192-90011

**Revision Date:** March 2000

---

## HP References in this Manual

This manual may contain references to HP or Hewlett-Packard. Please note that Hewlett-Packard's former test and measurement, semiconductor products and chemical analysis businesses are now part of Agilent Technologies. We have made no changes to this manual copy. The HP XXXX referred to in this document is now the Agilent XXXX. For example, model number HP8648A is now model number Agilent 8648A.

## About this Manual

We've added this manual to the Agilent website in an effort to help you support your product. This manual provides the best information we could find. It may be incomplete or contain dated information, and the scan quality may not be ideal. If we find a better copy in the future, we will add it to the Agilent website.

## Support for Your Product

Agilent no longer sells or supports this product. You will find any other available product information on the Agilent Test & Measurement website:

**www.tm.agilent.com**

Search for the model number of this product, and the resulting product page will guide you to any available information. Our service centers may be able to perform calibration if no repair parts are needed, but no other support from Agilent is available.

Agilent Technologies

# Agilent 4192A
## LF Impedance Analyzer

**Operation Manual**

**MANUAL IDENTIFICATION**

Model Number: 4192A
Date Printed: March 2000
Part Number: 04192-90011

This supplement contains information for correcting manual errors and for adapting the manual to newer instruments that contains improvements or modifications not documented in the existing manual.

To use this supplement
1. Make all ERRATA corrections
2. Make all appropriate serial-number-related changes listed below

| SERIAL PREFIX OR NUMBER CHANGES | MAKE MANUAL |
|---|---|
| All | 1 |
| | |
| | |
| | |

| SERIAL PREFIX OR NUMBER CHANGES | MAKE MANUAL |
|---|---|
| | |
| | |
| | |
| | |

◆ New Item

## ERRATA

## CHANGES 1

Change the company name from YOKOGAWA-HEWLETT-PACKARD, LTD. or its abbreviation YHP to Agilent Technologies Japan, Ltd.

CHANGE 1 contains the information needed to adapt the HP 4192A's manual.

NOTE

Manual change supplement are revised as often as necessary to keep manuals as current and accurate as possible. Agilent Technologies recommends that you periodically request the latest edition of this supplement. Free copies are available from all Agilent Technologies offices. When requesting copies, quote the manual identification information from your supplement, or the model number and print date from the title page of the manual.


PRINTED IN JAPAN

Agilent Technologies

## The pink sheet titled "CAUTION ON OPERATION"

**Change the page title as follows.**

⚠ CAUTIONS ON OPERATION

**Section "HOW TO REPLACE A1F1"**

**Add the following information.**

Fuse: 0.125A 125V Non Time Delay

If you need this fuse,contact your nearest Agilent Technologies Sales and Service Office.

**Warning** **Dangerous energy/voltage exists when the 4192A is in operation,and for a time after it is powered down.Allow 1 minute for the internal capacitors to discharge.**

## First page of the front matter "SAFETY SUMMARY"

**Add the following note.**

*Note* *4192A complies with INSTALLATION CATEGORY II and POLLUTION DEGREE 2 in IEC1010-1. 4192A is INDOOR USE product.*

*Note* *LEDs in this product are Class 1 in accordance with IEC825-1.*

*CLASS 1 LED PRODUCT*

## Third page of the front matter "SAFTY SYMBOLS"

**Add the following symbols.**


On (Supply).

Off (Supply).

In position of push-button switch.

Out position of push-button switch.

Affixed to product containing static sensitive devices - use anti-static handling procedures to prevent electrostatic discharge damage to component

## Page ii “TABLE OF CONTENTS”

**Change the SECTION2 as follows.**

SECTION2

Installation and Set Up Guide

2-1. Incoming Inspection ..... 2-1

2-2. Power requirements ..... 2-2

2-3. ⚠ Line Voltage and Fuse Selection ..... 2-3

2-4. Power Cable ..... 2-4

2-5. Operation Environment ..... 2-6

2-6. Electromagnetic Compatibility ..... 2-6

2-7. Ventilation Requirements ..... 2-6

2-8. Instruction for Cleaning ..... 2-6

2-9. Rack/Handle Installation ..... 2-7

**Change the 3-5 as follows.**

3-5. ⚠ PANEL FEATURES ..... 3-2

## Page1-3 “Figure 1-2. Serial Number Plate”

**Change the Serial Number Plate as follows.**

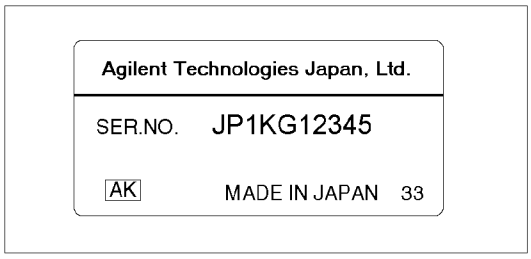


**Figure 1-2. Serial Number Plate**

## Page1-15 “GENERAL”

**Add the Operating Altitude.**

**Operating Altitude** 0m to 2000m

## Page3-2 “Figure3-2 Front Panel Features”

**Change the figure as follows.**

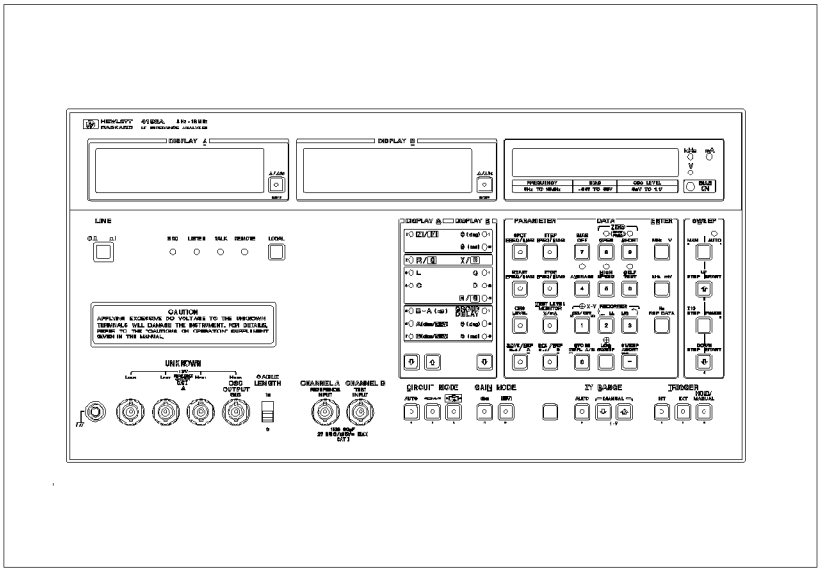

## Page3-2 “PANEL FEATURES”

**Add the description in (8)CHANNEL B (TEST INPUT) Connector:**

INSTALLATION CATEGORY I

**Add the description in (9)CHANNEL A (REFEREBCE INPUT) Connector:**

INSTALLATION CATEGORY I

**Change the (12)UNKNOWN Terminals as follows and add the description.**

**(12) ⚠ UNKNOWN Terminals**

Available four terminal-pair test fixtures or test leads are refer to the Accessories Selection Guide For Impedance Measurements (Catalog number 5963-6834E).

INSTALLATION CATEGORY I

**Change the (13)GROUND Terminal as follows.**

**(13)FRAME Terminal**

## Page3-86 "3-139.INTERNAL CONTROL SWITCH"

**Change the warning as follows.**

Warning **Dangerous energy/voltage exists when the 4192A is in operation,and for a time after it is powered down.Allow 1 minute for the internal capacitors to discharge.**

**Add the description (8) after (7).**

(8) Reinstall the A6 board, then replace the top cover, and two plastic feet.

## SECTION 2 "INSTALLATION"

**Change the SECTION 2 as following pages.**

# Installation and Set Up Guide

This chapter provides the information necessary for performing an incoming inspection and setting up the 4192A. The main topics in this chapter are:

2-1. Incoming Inspection

2-2. Power requirements

2-3. Line Voltage and Fuse Selection

2-4. Power Cable

2-5. Operation Environment

2-6. Electromagnetic Compatibility

2-7. Ventilation Requirements

2-8. Instruction for Cleaning

2-9. Rack/Handle Installation

## 2-1. Incoming Inspection

**Warning** **To avoid hazardous electrical shock, do not turn on the 4192A when there are signs of shipping damage to any portion of the outer enclosure (for example, covers, panel, or display)**

Inspect the shipping container for damage. If the shipping container or cushioning material is damaged, it should be kept until the contents of the shipment have been checked for completeness and the 4192A has been checked mechanically and electrically. The contents of the shipment should be as listed in Table 2-1. If the contents are incomplete, if there is mechanical damage or defect, or if the analyzer does not pass the power-on selftests, notify the nearest Agilent Technologies office. If the shipping container is damaged, or the cushioning material shows signs of unusual stress, notify the carrier as well as the Agilent Technologies office. Keep the shipping materials for the carrier's inspection.

**Table 2-1. 4192A Contents**

| Description | Qty. | Agilent Part Number |
|---|---|---|
| **4192A** | | |
| 16047A Test Fixture | 1 | — |
| 50ΩFeedthrough(2ea.) | 1 | 04192-61002 |
| Power Splitter | 1 | 04192-61001 |
| BNC Adapter | 1 | 1250-0216 |
| 11170A BNC Cable(2ea.) | 1 | 8120-1838 |
| Additional Fuses for A1F1(2ea.) | 1 | 2110-0650 |
| Power cable[1] | 1 | — |
| Operation Manual | 1 | 04192-90011 |
| **Option 907 Handle Kit** | | |
| Handle kit | 1 | 5061-9690 |
| **Option 908 Rack Flange Kit** | | |
| Rack Flange Kit | 1 | 5061-9678 |
| **Option 909 Rack Flange & Handle Kit** | | |
| Rack Flange & Handle Kit | 1 | 5061-9684 |

1 Power Cable depends on where the instrument is used, see "2-4. Power Cable".

## 2-2. Power Requirements

The 4192A requires the following power source:

Voltage : 90 to 132 Vac, 198 to 252 Vac

Frequency : 48 to 66 Hz

Power : 150 VA maximum

## 2-3. Line Voltage and Fuse Selection

The 4192A requires a power source of 100 V~,120 V~,220 V~,240 V~ ac.Select the line voltage from 100V, 120V, 220V, and 240 V using the two voltage selectors on the rear panel. (Refer to Figure2-1.)

Use a screwdriver to set the Line Voltage Selector switch to the appropriate voltage.

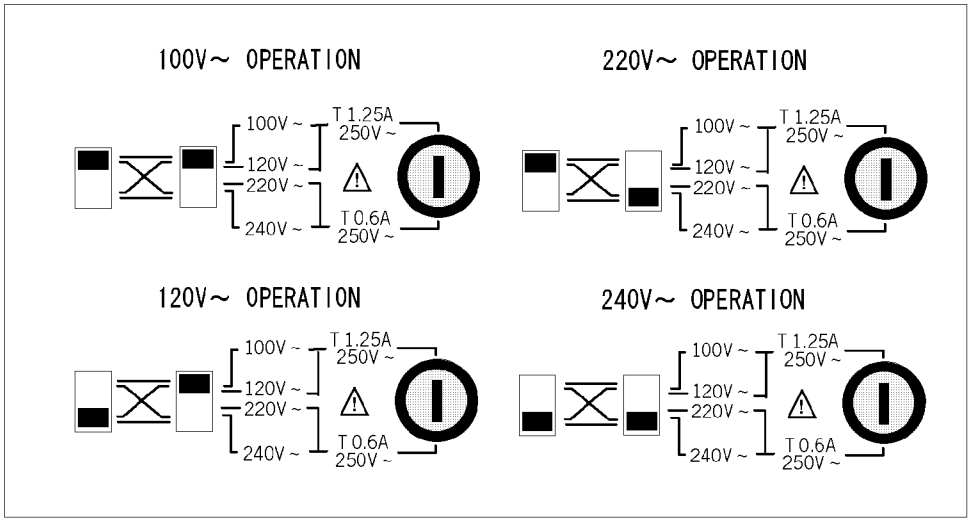


**Figure 2-1. Line Voltage and Fuse Selection**

**Caution** **Before connecting the instrument to the power source, make sure that the correct fuse has been installed and the Line Voltage Selection Switch is correctly set.**

### Line Voltage Selection

Select the proper voltage selector according to the Table 2-2.

**Table 2-2. Line Voltage Selection**

| Voltage Selector | Line Voltage |
|---|---|
| 100 V~ | 90–110 V, 48–66 Hz |
| 120 V~ | 108–132 V, 48–66 Hz |
| 220 V~ | 198–242 V, 48–66 Hz |
| 240 V~ | 216–252 V, 48–66 Hz |

### ⚠Fuse Selection

Select proper fuse according to the Table 2-3. Current ratings for the fuse are printed under the fuseholder on the rear panel, and are listed, along with the fuse's Agilent Part number, in Table 2-3.

**Table 2-3. Fuse Selection**

| Operating Voltage | Fuse Rating/Type | Fuse Part Number |
|---|---|---|
| 100 V~ | 1.25A 250Vac | |
| | UL/CSA type | 2110-0305 |
| 120 V~ | Time Delay | |
| 220 V~ | 0.6A 250Vac | |
| | UL/CSA type | 2110-0016 |
| 240 V~ | Time Delay | |

If you need this fuse,contact your nearest Agilent Technologies Sales and Service Office.

To remove the fuse, turn the fuse holder counterclockwise until the fuse pops out.

**Caution** **Use the proper fuse for the line voltage selected. Use only fuses with the required current rating and of the specified type as replacements. DO NOT use a mended fuse or short-circuit the fuse-holder in order to by-pass a blown fuse. Find out what caused the fuse to blow!**

## 2-4. Power Cable

In accordance with international safety standards, this instrument is equipped with a three-wire power cable. When connected to an appropriate ac power outlet, this cable grounds the instrument frame.
The type of power cable shipped with each instrument depends on the country of destination. Refer to Figure2-2. for the part numbers of the power cables available.

**Warning** **For protection from electrical shock, the power cable ground must not be defeated.The power plug must be plugged into an outlet that provides a protective earth ground connection.**

OPTION 900 — United Kingdom

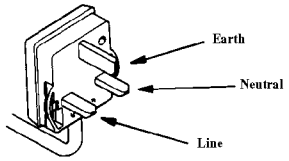


Plug : BS 1363A, 250V
Cable : HP 8120-1351

OPTION 901 — Australia / New Zealand

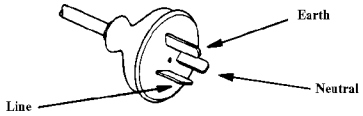


Plug : NZSS 198/AS C112, 250V
Cable : HP 8120-1369

OPTION 902 — European Continent

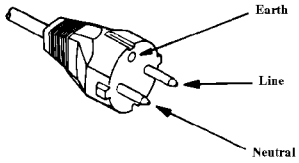


Plug : CEE-VII, 250V
Cable : HP 8120-1689

OPTION 903 — U.S. / Canada

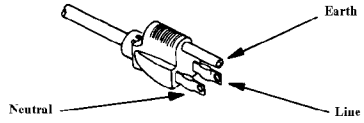


Plug : NEMA 5-15P, 125V, 15A
Cable : HP 8120-1378

OPTION 904 — U.S. / Canada

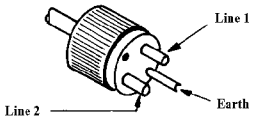


Plug : NEMA 6-15P, 250V, 15A
Cable : HP 8120-0698

OPTION 905* — Any country

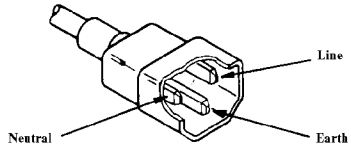


Plug : CEE 22-VI, 250V
Cable : HP 8123-1396

OPTION 906 — Switzerland

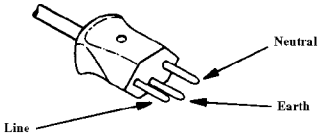


Plug : SEV 1011.1959-24507 Type 12, 250V
Cable : HP 8120-2104

OPTION 912 — Denmark

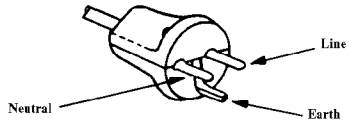


Plug : DHCR 107, 220V
Cable : HP 8120-2956

OPTION 917 — India / Republic of S.Africa

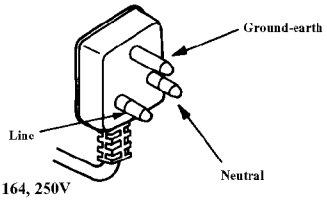


Plug : SABS 164, 250V
Cable : HP 8120-4211

OPTION 918 — Japan

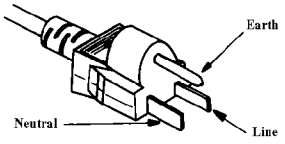


Plug : JIS C 8303, 125V, 15A
Cable : HP 8120-4753

NOTE: Each option number includes a 'family' of cords and connectors of varoius materials and plug body configurations (straight, 90° etc.).

* Plug option 905 is frequently used for interconnecting system components and peripherals.

**Figure2-2. Power Cable Supplied**

## 2-5. Operation Environment

The 4192A must be operated under within the following environment conditions, and sufficient space must be kept behind the 4192A to avoid obstructing the air flow of the cooling fans.

Temperature: 0°C to 55°C

Humidity: less than 95% RH at 40°C

*Note* *The 4192A must be protected from temperature extremes which could cause condensation within the instrument.*

## 2-6. Electromagnetic Compatibility

This product has been designed and tested to the requirements of the Electromagnetic Compatibility (EMC) Directive 89/336/EEC. To use a properly shielded cable or shielded coaxial cable (such as those recommended in the General Information and the Performance Test) to connect each of the ports to their respective controllers, peripherals, equipments or devices may ensure to meet the requirements.

## 2-7. Ventilation Requirements

To ensure adequate ventilation, make sure that there is adequate clearance around the 4192A.

## 2-8. Instruction for Cleaning

To prevent electrical shock, disconnect the 4192A power cable from the receptacle before cleaning. Use a dry cloth or a cloth slightly dipped in water to clean the casing. Do not attempt to clean the 4192A internally.

## 2-9. Rack/Handle Installation

The analyzer can be rack mounted and used as a component in a measurement system. Figure2-3 shows how to rack mount the 4192A.

**Table 2-4. Rack Mount Kits**

| Option | Description | Agilent Part Number |
|---|---|---|
| 907 | Handle Kit | 5061-9690 |
| 908 | Rack Flange Kit | 5061-9678 |
| 909 | Rack Flange & Handle Kit | 5061-9684 |

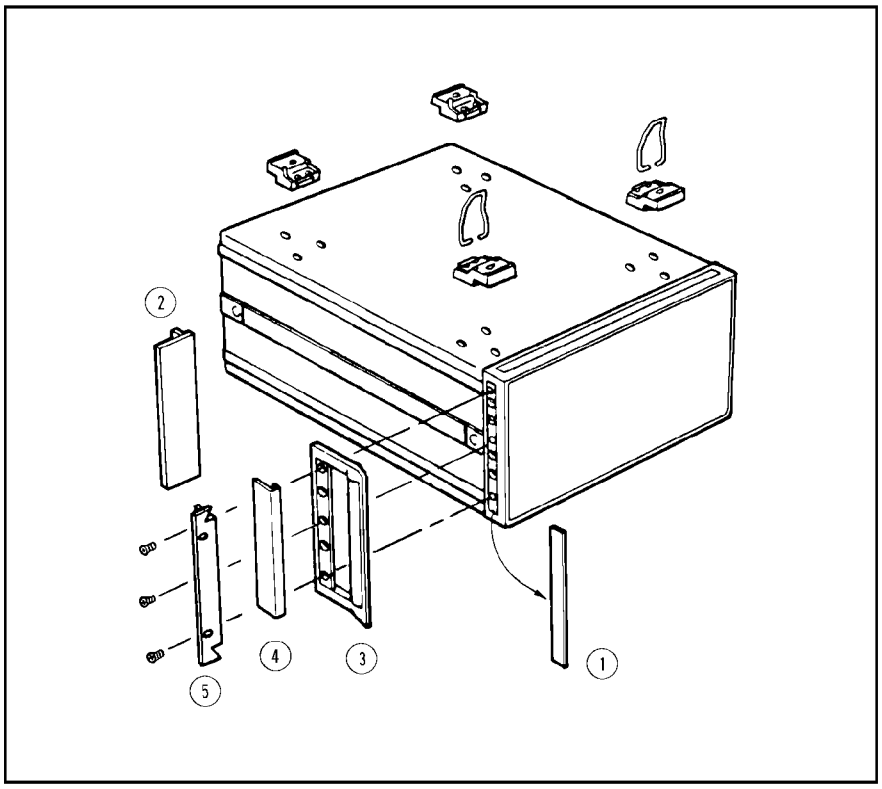


**Figure2-3. Rack Mount Kits Installation**

### Option 907 Handle Kit

Option 907 is a handle kit containing a pair of handles and the necessary hardware to attach them to the instrument.

#### Installing the Handle

1. Remove the adhesive-backed trim strips ① from the left and right front sides of the 4192A. (Refer to Figure2-3.)
2. Attach the front handles ② to the sides using the screws provided.
3. Attach the trim strips ③ to the handles.

## Option 908 Rack Flange Kit

Option 908 is a rack flange kit containing a pair of flanges and the necessary hardware to mount them to the instrument in an equipment rack with 482.6 mm (19 inches) horizontal spacing.

### Mounting the Rack

1. Remove the adhesive-backed trim strips ① from the left and right front sides of the 4192A. (Refer to Figure2-3.)
2. Attach the rack mount flange ④ to the left and right front sides of the 4192A using the screws provided.
3. Remove all four feet ⑤ (lift bar on the inner side of the foot, and slide the foot toward the bar.)

## Option 909 Rack Flange & Handle Kit

Option 909 is a rack mount kit containing a pair of flanges and the necessary hardware to mount them to an instrument which has handles attached, in an equipment rack with 482.6 mm (19 inches) spacing.

### Mounting the Handle and Rack

1. Remove the adhesive-backed trim strips 1 from the left and right front sides of the 4192A.
2. Attach the front handle 3 and the rack mount flange 5 together on the left and right front sides of the 4192A using the screws provided.
3. Remove all four feet (lift bar on the inner side of the foot, and slide the foot toward the bar).

# Agilent 4192A
## LF Impedance Analyzer

**Operation Manual**

**MANUAL IDENTIFICATION**

Model Number: 4192A
Date Printed: March 2000
Part Number: 04192-90011

This supplement contains information for correcting manual errors and for adapting the manual to newer instruments that contains improvements or modifications not documented in the existing manual.

To use this supplement
1. Make all ERRATA corrections
2. Make all appropriate serial-number-related changes listed below

| SERIAL PREFIX OR NUMBER | MAKE MANUAL CHANGES |
|---|---|
| All | 1 |
| | |
| | |
| | |

| SERIAL PREFIX OR NUMBER | MAKE MANUAL CHANGES |
|---|---|
| | |
| | |
| | |
| | |

◆ New Item

Some LCR components used in the HP 4192A have been standardized to decrease the number of similar components. For example, if a unit uses both 6.8kΩ 5% and 6.81kΩ 1% resistors, the standard resistor will be now be 6.81kΩ 1%.

Change the part numbers in the Replaceable Parts List of Section 6 as given in the following table.

Table 1. Parts Standardization Change (Sheet 1 of 2)

| Old Part | | New Part | |
|---|---|---|---|
| Part Number | Description | Part Number | Description |
| 0160-3847 | Capacitor .01uF +100 | 0160-4832 | Capacitor .01uF 10% |
| 0683-1005 | Resistor 10Ω 5% | 0757-0346 | Resistor 10Ω 1% |
| 0683-1015 | Resistor 100Ω 5% | 0757-0401 | Resistor 100Ω 1% |
| 0683-1025 | Resistor 1kΩ 5% | 0757-0280 | Resistor 1kΩ 1% |
| 0683-1035 | Resistor 10kΩ 5% | 0757-0442 | Resistor 10kΩ 1% |
| 0683-1045 | Resistor 100kΩ 5% | 0757-0465 | Resistor 100kΩ 1% |
| 0683-1055 | Resistor 1MΩ 5% | 0698-8827 | Resistor 1MΩ 1% |
| 0683-1215 | Resistor 120Ω 5% | 0757-0403 | Resistor 121Ω 1% |

NOTE

Manual change supplement are revised as often as necessary to keep manuals as current and accurate as possible. Agilent Technologies recommends that you periodically request the latest edition of this supplement. Free copies are available from all Agilent Technologies offices. When requesting copies, quote the manual identification information from your supplement, or the model number and print date from the title page of the manual.


PRINTED IN JAPAN

**Agilent Technologies**

Table 1. Parts Standardization Change (Sheet 2 of 2)

| Old Part | | New Part | |
|---|---|---|---|
| Part Number | Description | Part Number | Description |
| 0683-1245 | Resistor 120kΩ 5% | 0757-0467 | Resistor 121kΩ 1% |
| 0683-1525 | Resistor 1.5kΩ 5% | 0757-1094 | Resistor 1.47kΩ 1% |
| 0683-1535 | Resistor 15Ω 5% | 0698-3156 | Resistor 14.7kΩ 1% |
| 0683-1545 | Resistor 150kΩ 5% | 0698-3452 | Resistor 147kΩ 1% |
| 0683-1815 | Resistor 180Ω 5% | 0698-3439 | Resistor 178Ω 1% |
| 0683-1825 | Resistor 1.8kΩ 5% | 0757-0278 | Resistor 1.78kΩ 1% |
| 0683-1845 | Resistor 180kΩ 5% | 0698-3243 | Resistor 178kΩ 1% |
| 0683-2205 | Resistor 22Ω 5% | 0698-3430 | Resistor 21.5Ω 1% |
| 0683-2215 | Resistor 220Ω 5% | 0698-3441 | Resistor 215Ω 1% |
| 0683-2225 | Resistor 2.2kΩ 5% | 0698-0084 | Resistor 2.15kΩ 1% |
| 0683-2235 | Resistor 22kΩ 5% | 0757-0199 | Resistor 21.5kΩ 1% |
| 0683-2245 | Resistor 220kΩ 5% | 0698-3454 | Resistor 215kΩ 1% |
| 0683-2725 | Resistor 2.7kΩ 5% | 0698-0085 | Resistor 2.61kΩ 1% |
| 0683-2745 | Resistor 270kΩ 5% | 0698-3455 | Resistor 261kΩ 1% |
| 0683-3305 | Resistor 33Ω 5% | 0757-0180 | Resistor 31.6Ω 1% |
| 0683-3315 | Resistor 330Ω 5% | 0698-3444 | Resistor 316Ω 1% |
| 0683-3325 | Resistor 3.3kΩ 5% | 0757-0279 | Resistor 3.16kΩ 1% |
| 0683-3335 | Resistor 33kΩ 5% | 0698-3160 | Resistor 31.6kΩ 1% |
| 0683-3345 | Resistor 330kΩ 5% | 0698-3457 | Resistor 316kΩ 1% |
| 0683-3935 | Resistor 39kΩ 5% | 0698-3161 | Resistor 38.3kΩ 1% |
| 0683-3945 | Resistor 390kΩ 5% | 0698-3459 | Resistor 383kΩ 1% |
| 0683-4705 | Resistor 47Ω 5% | 0698-4037 | Resistor 46.4Ω 1% |
| 0683-4715 | Resistor 470Ω 5% | 0698-0082 | Resistor 464Ω 1% |
| 0683-4725 | Resistor 4.7kΩ 5% | 0698-3155 | Resistor 4.64kΩ 1% |
| 0683-4735 | Resistor 47kΩ 5% | 0698-3162 | Resistor 46.4kΩ 1% |
| 0683-4745 | Resistor 470kΩ 5% | 0698-3260 | Resistor 464kΩ 1% |
| 0683-5615 | Resistor 560Ω 5% | 0698-0417 | Resistor 562Ω 1% |
| 0683-5625 | Resistor 5.6kΩ 5% | 0698-0200 | Resistor 5.62kΩ 1% |
| 0683-5645 | Resistor 560kΩ 5% | 0698-8824 | Resistor 562kΩ 1% |
| 0683-6805 | Resistor 68Ω 5% | 0757-0397 | Resistor 68.1Ω 1% |
| 0683-6815 | Resistor 680Ω 5% | 0757-0419 | Resistor 681Ω 1% |
| 0683-6845 | Resistor 680kΩ 5% | 0698-8825 | Resistor 681kΩ 1% |
| 0683-8245 | Resistor 820kΩ 5% | 0698-8826 | Resistor 825kΩ 1% |

# Agilent 4192A
## LF Impedance Analyzer

**Operation Manual**

**MANUAL IDENTIFICATION**

Model Number: 4192A
Date Printed: March 2000
Part Number: 04192-90011

This supplement contains information for correcting manual errors and for adapting the manual to newer instruments that contains improvements or modifications not documented in the existing manual.

To use this supplement
1. Make all ERRATA corrections
2. Make all appropriate serial-number-related changes listed below

| SERIAL PREFIX OR NUMBER | MAKE MANUAL CHANGES |
|---|---|
| All | 1 |
| 2514J05056 and above | 2 |
| 2514J05200 and above | 3 |
| 2514J05738 and above | 4 |

| SERIAL PREFIX OR NUMBER | MAKE MANUAL CHANGES |
|---|---|
| | |
| | |
| | |
| | |

◆ New Item

## ERRATA

**Page 4-7, Table 4-5. Resistance Accuracy Test**

**Change the test limit at 100 Hz, 500 Hz, and 5 MHz setting for 100 Ω resistance measurement, and the test limit at 500 Hz setting for 1 kΩ resistance measurement as follows.**

| Test Frequency | 100 Ω | 1 kΩ |
|---|---|---|
| 100 Hz | C.V.±0.19 Ω | C.V.±3.3 Ω |
| 500 Hz | C.V.±0.13 Ω | |
| 5 MHz | C.V.±0.88 Ω | |

**Add the following note under Table 4-5.**

**NOTE**

**For the 100 Ω resistor, use calibrated "R" as C.V. For the 1k, 10k, and 100 kΩ resistors, calculate C.V. from calibrated "R" and "Cp" using the following formula.**

$$C.V. = \frac{R}{1 + (2 \times \pi \times (\text{Test Frequency}) \times Cp \times R)^2}$$

NOTE

Manual change supplement are revised as often as necessary to keep manuals as current and accurate as possible. Agilent Technologies recommends that you periodically request the latest edition of this supplement. Free copies are available from all Agilent Technologies offices. When requesting copies, quote the manual identification information from your supplement, or the model number and print date from the title page of the manual.


PRINTED IN JAPAN

Agilent Technologies

Section 4, Page i to viii. Performance Test Record
Replace page i to viii with the attached replacement pages in this supplement.

Page 6-30, Table 6-3. Replaceable Parts.
Change reference designator A8R76 to A8R75.

Page 6-32, Table 6-3. Replaceable Parts
Change the part number for A10BT1 and A10BT2 to 1420-0337.

Page 6-44, Table 6-5. Interconnecting Cable Assemblies.
Delete the part number (04192-61609) for the HP-IB CABLE connected between the A13 board and connector A6J1.

Page 8-121, Figure 8-76. A6 Board Schematic Diagram.
Change the part number for the HP-IB PCB assy. to 04262-66503.

Pages 8-129, 8-132, Figure 8-81, A8 Board Component Locations.
Change reference designator R81 to R32, and place the reference designator C1 as shown in Figure 1.

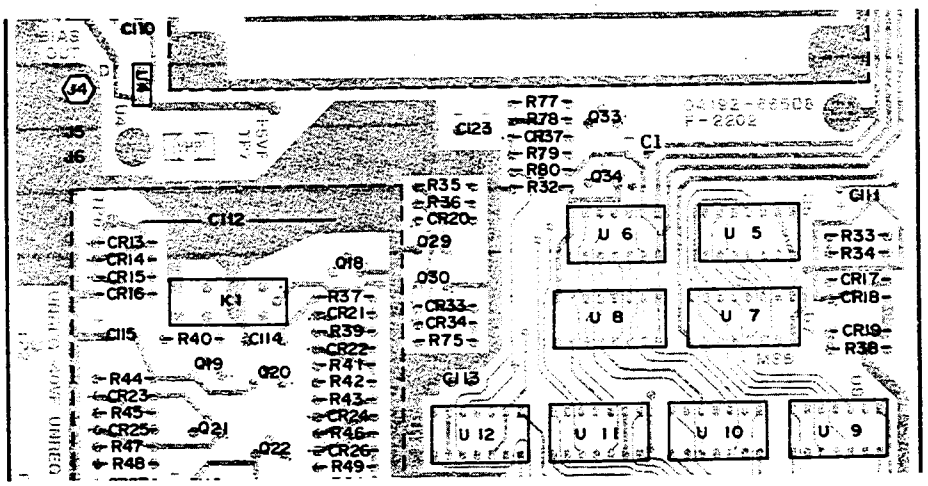


Figure 1.

CHANGE 1

Section 4, Table 4-1. Recommended Test Equipment
Delete the Signature Analyzer HP 5004A.
Delete the Logic Test Box with Test ROM's HP 16343A.

Page 8-47, FLOW DIAGRAM NOTES
Add the following note at the top of the page.

**NOTE**

Pages 8-47 through 8-66 are valid for the A6 board with PN 04192-66506 only. Ignore the pages if the board has a different part number.

► Page 8-119, Fig 8-75. A6 Microprocessor Digital Control Board Assembly Schematic Diagram
Add the following note.

**NOTE**

Pages 8-199 through 8-122 are valid for the A6 board with PN 04192-66506 only. Ignore the pages if the board has a different part number.

Section 6, Table 6-3. Replaceable Parts.
See Table 1. Parts Information.

Page 5-7, Paragraph 5-19. A8 DC BIAS CHECK AND ADJUSTMENT.
Change the adjustment procedure (2) Zero Bias Adjustment as follows.

(2) Zero Bias Adjustment

a. Confirm the revision number of the A8 board, if the revision number is 'A-XXXX', 'B-XXXX', 'C-XXXX', 'D-XXXX', 'E-XXXX', or 'F-XXXX' (XXXX: any number), skip steps b through d.

b. Connect the digital voltmeter's high lead to A8TP14, and its low lead to "GNDF".

c. Set the HP 4192A's SPOT BIAS to 0 V, and OSC LEVEL to 5 mV ( [blue], [SPOT BIAS], [0], ENTER [mV], [OSC LEVEL], [5], ENTER [mV] ).
d. Adjust A8R81 (OFFSET ADJ) until the digital voltmeter's reading is 0 V ±0.01 mV.

**NOTE**

If the digital voltmeter's reading can not be adjusted within range with A8R81, replace the factory selected parts A8R83* and A8R84* as follows, and repeat steps b through d.

1) If A8R83* is 21.5 kΩ and A8R84* is 31.6 kΩ, replace them with the following resistors.
A8R83* HP p/n 0757-0443 (11 kΩ)
A8R84* HP p/n 0698-3450 (42.2 kΩ)

2) If A8R83* is 11 kΩ and A8R84* is 42.2 kΩ, replace them with the following resistors.
A8R83* HP p/n 0757-0199 (21.5 kΩ)
A8R84* HP p/n 0698-3160 (31.6 kΩ)

e. Remove the smaller of the two shield covers from the A8 board.

f. Connect the digital voltmeter's high lead to A8TP6.

g. Set the HP 4192A's SPOT BIAS to 0 V ( [blue], [SPOT BIAS], [0], ENTER [V] ).

h. Adjust A8R71 (ZERO ADJ) until the digital voltmeter's reading is 0 V ±2 mV.

CHANGE 2

Pink Sheet, CAUTION OF OPERATION, EXTERNAL BIASING: PRECAUTIONS AND LIMITATIONS.
Delete the second paragraph; "If a dc voltage exceeding the limits ... ... if the 4192A's built-in dc bias source is used."

Pink Sheet, CAUTION OF OPERATION, SYMPTOMS OF A BLOWN A1F1, and HOW TO REPLACE A1F1.
Delete this page.

Page 6-5, Table 6-3. Replaceable Parts.
See Table 1. Parts Information.

Pages 8-78, 8-84, 8-90, Figure 8-43. A1 Board Component Locations.
Delete F1 on the Component Locations.

Pages 8-91, Figure 8-49. A1 Board Schematic Diagram.
Delete F1 on the Schematic Diagram, and replace it with a line (wire) , as shown in Figure 2.

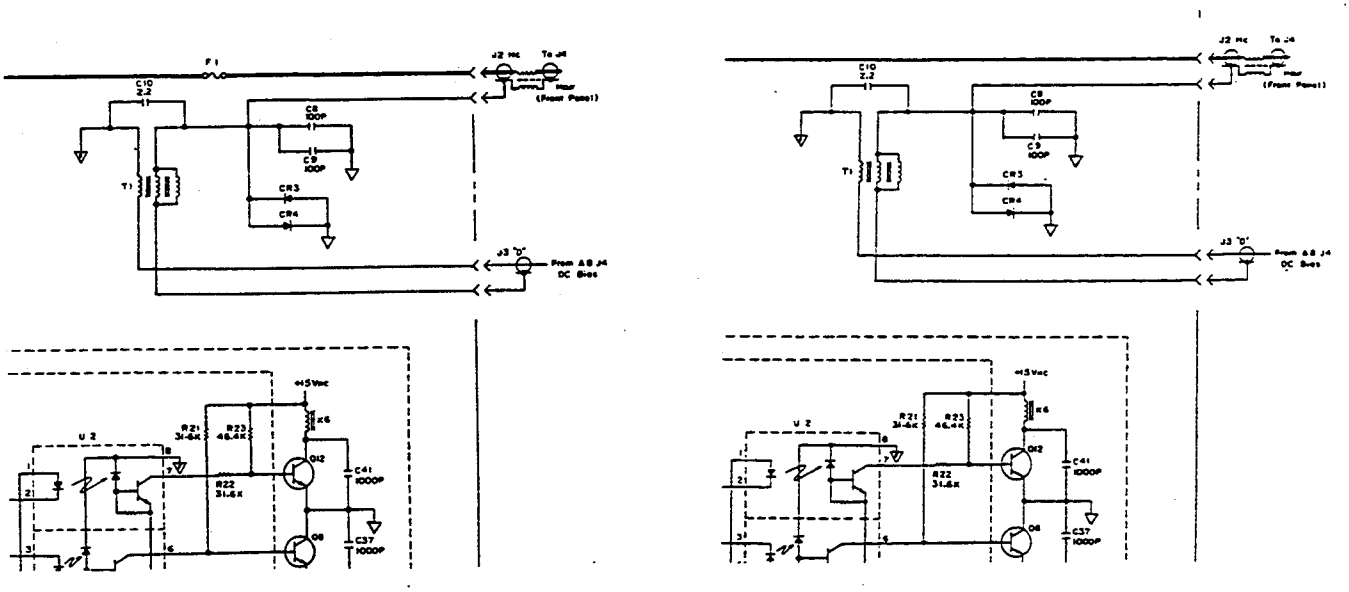

old new

Figure 2.

► CHANGE 3

Pages 6-21 through 6-23, Table 6-3. Replaceable Parts
Delete all parts which begins with the designator "A6". Add the following parts.

| Reference Designation | HP Part Number | Description |
|---|---|---|
| A6 | 04192-66516 | CONTROL LOGIC BOARD ASSY. (Non-exchange) |
| A6 | 04192-69516 | CONTROL LOGIC BOARD ASSY. (Rebuilt-exchange) |

CHANGE 4

Pages 6-28, 6-30, 6-31, Table 6-3. Replaceable Parts.
See Table 1. Parts Information.

Pages 8-129, 8-132, Figure 8-81. A8 Board Component Locations.
Change the component locations as shown in Figure 3.

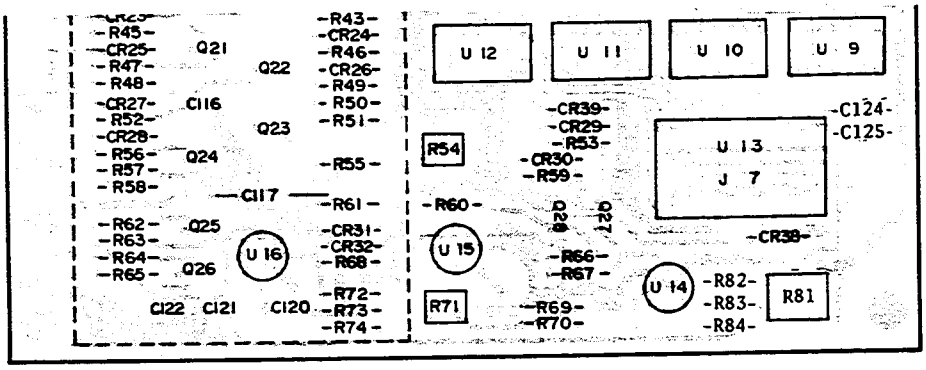


Figure 3.

Page 8-133, Figure 8-84. A8 Board Schematic Diagram
Change the schematic diagram as shown in Figure 4.

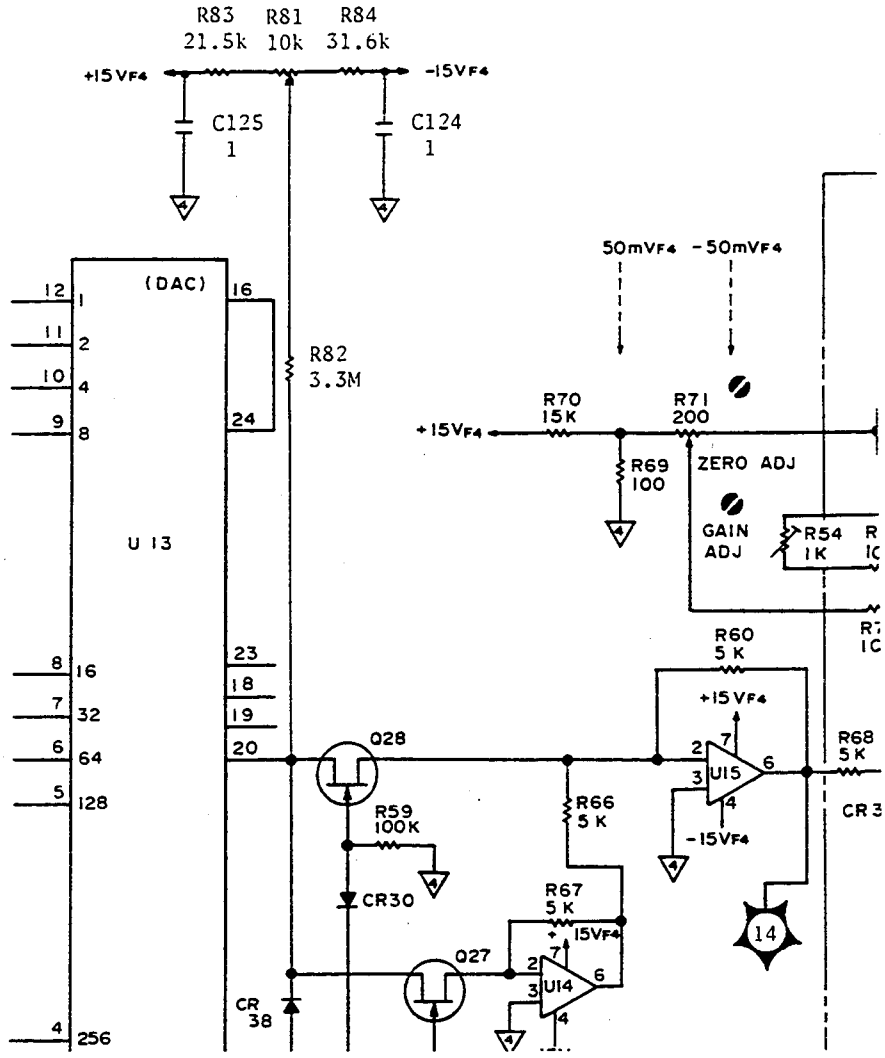


Figure 4.

Table 1. Parts Information (1 of 2)

| CHANGE | PAGE | NOTE | REFERENCE DESIGNATION | HP PART NUMBER | DESCRIPTION |
|---|---|---|---|---|---|
| 1 | 6-16 | C | A4R76 | 1810-1241 | NETWORK-RESISTOR 16 PIN DIP |
| | 6-23 | C | A6U114 | 1820-2293 | IC MC68B00P |
| | 6-27 | C | A8C1-C11 | 0180-3600 | CAPACITOR 33 µF 25VDC AL |
| | | | A8C13 | 0180-3600 | CAPACITOR 33 µF 25VDC AL |
| | | | A8C15 | 0180-3600 | CAPACITOR 33 µF 25VDC AL |
| | | | A8C16 | 0160-4835 | CAPACITOR 1 µF 50VDC CER |
| | | | A8C17-C22 | 0180-3600 | CAPACITOR 33 µF 25VDC AL |
| | | | A8C27-C29 | 0180-3600 | CAPACITOR 33 µF 25VDC AL |
| | | | A8C32 | 0180-3600 | CAPACITOR 33 µF 25VDC AL |
| | | | A8C34 | 0180-3600 | CAPACITOR 33 µF 25VDC AL |
| | | | A8C35 | 0160-4835 | CAPACITOR 1 µF 50VDC CER |
| | | | A8C36-C41 | 0180-3600 | CAPACITOR 33 µF 25VDC AL |
| | | | A8C46-C48 | 0180-3600 | CAPACITOR 33 µF 25VDC AL |
| | | | A8C51 | 0180-3600 | CAPACITOR 33 µF 25VDC AL |
| | | | A8C53 | 0180-3600 | CAPACITOR 33 µF 25VDC AL |
| | | | A8C54 | 0160-4835 | CAPACITOR 1 µF 50VDC CER |
| | | | A8C55-C60 | 0180-3600 | CAPACITOR 33 µF 25VDC AL |
| | | | A8C66-C67 | 0180-3600 | CAPACITOR 33 µF 25VDC AL |
| | | | A8C68 | 0180-3468 | CAPACITOR 47 µF 50VDC AL |
| | | | A8C70 | 0180-3600 | CAPACITOR 33 µF 25VDC AL |
| | 6-28 | C | A8C72-C78 | 0180-3468 | CAPACITOR 47 µF 50VDC AL |
| | | | A8C80 | 0180-3468 | CAPACITOR 47 µF 50VDC AL |
| | | | A8C83 | 0180-3600 | CAPACITOR 33 µF 25VDC AL |
| | | | A8C85-C86 | 0160-4835 | CAPACITOR 1 µF 50VDC CER |
| | | | A8C89 | 0180-3468 | CAPACITOR 47 µF 50VDC AL |
| | | | A8C91 | 0160-4835 | CAPACITOR 1 µF 50VDC CER |
| | | | A8C92-C101 | 0180-3600 | CAPACITOR 33 µF 25VDC AL |
| | | | A8C103-C104 | 0180-3600 | CAPACITOR 33 µF 25VDC AL |
| | | | A8C107-C108 | 0180-3600 | CAPACITOR 33 µF 25VDC AL |
| | | | A8C110-C111 | 0180-3600 | CAPACITOR 33 µF 25VDC AL |
| | | | A8C113 | 0180-3600 | CAPACITOR 33 µF 25VDC AL |
| | | | A8C114 | 0160-4805 | CAPACITOR 47 pF 100VDC CER |
| | | | A8C115-C116 | 0180-3468 | CAPACITOR 47 µF 50VDC AL |
| | | | A8C117 | 0160-4834 | CAPACITOR .047 µF 100VDC CER |
| | | | A8C121-C122 | 0180-3600 | CAPACITOR 33 µF 25VDC AL |
| | | | A8C123 | 0180-3431 | CAPACITOR 220 µF 10VDC AL |

►: NEW ITEM
A: Added
D: Deleted
C: Change

Table 1. Parts Information (2 of 2)

| CHANGE | PAGE | NOTE | REFERENCE DESIGNATION | HP PART NUMBER | DESCRIPTION |
|---|---|---|---|---|---|
| 2 | 6-5 | D | A1F1 | 2110-0650 | FUSE .125A 125V |
| 4 | 6-28 | A | A8C124<br>A8C125 | 0160-0127<br>0160-0127 | CAPACITOR 1 µF 25VDC CER<br>CAPACITOR 1 µF 25VDC CER |
| | 6-30 | A | A8R81<br>A8R82<br>A8R83*<br><br>A8R84* | 2100-3210<br>0683-3355<br>0757-0199<br>0757-0443<br>0698-3160<br>0698-3450 | RESISTOR-TRMR 10 kΩ<br>RESISTOR 3.3 MΩ 1/8W<br>RESISTOR 21.5 kΩ 1/8W 1%<br>RESISTOR 11 kΩ 1/8W 1%<br>RESISTOR 31.6 kΩ 1/8W 1%<br>RESISTOR 42.2 kΩ 1/8W 1% |
| | 6-31 | C | A8U13 | 1813-0105 | IC DAC80-CBI-V |

►: NEW ITEM
A: Added
D: Deleted
C: Change

## PERFORMANCE TEST RECORD

Hewlett-Packard

Model 4192A
LF IMPEDANCE ANALYZER

Tested by _____

Date _____

Serial No. _____

| Paragraph Number | Test | | Minimum | Result Actual | Maximum |
|---|---|---|---|---|---|
| 4-9 | Measurement Signal Frequency Accuracy Test | | | | |
| | | 1MHz ($H_{CUR}$) | 0.99995MHz | ——— | 1.00005MHz |
| | | 10MHz ($H_{CUR}$) | 9.9995MHz | ——— | 10.0005MHz |
| | | 1MHz (1MHz Output) | 0.99995MHz | ——— | 1.00005MHz |
| 4-11 | Measurement Signal Level Accuracy Test | | | | |
| | OSC Level : 5mV | | | | |
| | | 100Hz | 2.75mV | ——— | 7.26mV |
| | | 1kHz | 2.75mV | ——— | 7.26mV |
| | | 10kHz | 2.75mV | ——— | 7.25mV |
| | | 100kHz | 2.75mV | ——— | 7.25mV |
| | | 1MHz | 2.73mV | ——— | 7.27mV |
| | OSC Level : 100mV | 5Hz | 91.0mV | ——— | 109.0mV |
| | | 100Hz | 92.9mV | ——— | 107.1mV |
| | | 1kHz | 93.0mV | ——— | 107.0mV |
| | | 10kHz | 93.0mV | ——— | 107.0mV |
| | | 100kHz | 93.0mV | ——— | 107.0mV |
| | | 1MHz | 93.0mV | ——— | 107.0mV |
| | | 13MHz | 74.5mV | ——— | 125.5mV |
| | OSC Level : 105mV | 5Hz | 87.7mV | ——— | 122.35mV |
| | | 100Hz | 89.7mV | ——— | 120.3mV |
| | | 1kHz | 89.8mV | ——— | 120.2mV |
| | | 10kHz | 89.8mV | ——— | 120.2mV |
| | | 100kHz | 89.8mV | ——— | 120.2mV |
| | | 1MHz | 89.8mV | ——— | 120.2mV |
| | | 13MHz | 70.4mV | ——— | 139.6mV |

| Paragraph Number | Test | | Minimum | Result Actual | Maximum |
|---|---|---|---|---|---|
| 4-11 (continued) | Measurement Signal Level Accuracy Test | | | | |
| | OSC Level : 1.1V | 5Hz | 1.013V | ——— | 1.187V |
| | | 100Hz | 1.034V | ——— | 1.166V |
| | | 1kHz | 1.035V | ——— | 1.165V |
| | | 10kHz | 1.035V | ——— | 1.165V |
| | | 100kHz | 1.035V | ——— | 1.165V |
| | | 1MHz | 1.035V | ——— | 1.165V |
| | | 13MHz | 0.832V | ——— | 1.368V |
| 4-13 | Capacitance Accuracy Test | | | | |
| | Standard Capacitor : 1pF | | | | |
| | Capacitance | 100kHz | C.V. -6fF | ——— | C.V. +6fF |
| | | 500kHz | C.V. -3fF | ——— | C.V. +3fF |
| | | 1MHz | C.V. -2.6fF | ——— | C.V. +2.6fF |
| | | 5MHz | C.V. -13fF | ——— | C.V. +13fF |
| | | 10MHz | C.V. - 21.6fF | ——— | C.V. + 21.6fF |
| | | 13MHz | C.V. - 28.0fF | ——— | C.V. + 28.0fF |
| | Dissipation | 100kHz | - 0.0191 | ——— | + 0.0191 |
| | | 500kHz | -0.0055 | ——— | +0.0055 |
| | | 1MHz | - 0.0038 | ——— | + 0.0038 |
| | | 5MHz | -0.0113 | ——— | +0.0113 |
| | | 10MHz | -0.0216 | ——— | +0.0216 |
| | | 13MHz | -0.0279 | ——— | +0.0279 |
| | Standard Capacitor : 10pF | | | | |
| | Capacitance | 10kHz | C.V.-0.06pF | ——— | C.V. +0.06pF |
| | | 50kHz | C.V.-0.03pF | ——— | C.V. +0.03pF |
| | | 100kHz | C.V. -26fF | ——— | C.V. +26fF |
| | | 500kHz | C.V. - 40fF | ——— | C.V. + 40fF |
| | | 1MHz | C.V. -13fF | ——— | C.V. +13fF |
| | | 5MHz | C.V. -110fF | ——— | C.V. +110fF |
| | | 10MHz | C.V. - 163fF | ——— | C.V. + 163fF |
| | | 13MHz | C.V. - 211fF | ——— | C.V. + 211fF |
| | Dissipation | 10kHz | - 0.0191 | ——— | + 0.0191 |
| | | 50kHz | -0.0055 | ——— | +0.0055 |
| | | 100kHz | - 0.0038 | ——— | + 0.0038 |
| | | 500kHz | -0.0016 | ——— | +0.0016 |
| | | 1MHz | -0.0012 | ——— | +0.0012 |
| | | 5MHz | -0.0092 | ——— | +0.0092 |
| | | 10MHz | - 0.0174 | ——— | + 0.0174 |
| | | 13MHz | - 0.0224 | ——— | + 0.0224 |

C.V. = Calibrated Value

| Paragraph Number | Test | | Minimum | Result Actual | Maximum |
|---|---|---|---|---|---|
| 4-13 (continued) | Capacitance Accuracy Test | | | | |
| | Standard Capacitor : 100pF | | | | |
| | Capacitance | 1kHz | C.V. -0.6pF | ——— | C.V. +0.6pF |
| | | 5kHz | C.V. -0.3pF | ——— | C.V. +0.3pF |
| | | 10kHz | C.V. -0.26pF | ——— | C.V. +0.26pF |
| | | 50kHz | C.V. - 0.4pF | ——— | C.V. + 0.4pF |
| | | 100kHz | C.V. -0.13pF | ——— | C.V. +0.13pF |
| | | 500kHz | C.V. - 0.4pF | ——— | C.V. + 0.4pF |
| | | 1MHz | C.V. -0.13pF | ——— | C.V. +0.13pF |
| | | 5MHz | C.V. -1.1pF | ——— | C.V. +1.1pF |
| | | 10MHz | C.V. - 2.91pF | ——— | C.V. + 2.91pF |
| | | 13MHz | C.V. - 4.74pF | ——— | C.V. + 4.74pF |
| | Dissipation | 1kHz | - 0.0191 | ——— | + 0.0191 |
| | | 5kHz | -0.0055 | ——— | +0.0055 |
| | | 10kHz | - 0.0038 | ——— | + 0.0038 |
| | | 50kHz | -0.0016 | ——— | +0.0016 |
| | | 100kHz | -0.0012 | ——— | +0.0012 |
| | | 500kHz | -0.0016 | ——— | +0.0016 |
| | | 1MHz | -0.0012 | ——— | +0.0012 |
| | | 5MHz | -0.0107 | ——— | +0.0107 |
| | | 10MHz | - 0.0354 | ——— | + 0.0354 |
| | | 13MHz | -0.0580 | ——— | +0.0580 |
| | Standard Capacitor : 1000pF | | | | |
| | Capacitance | 100Hz | C.V. -13pF | ——— | C.V. +13pF |
| | | 400Hz | C.V. -3pF | ——— | C.V. +3pF |
| | | 1kHz | C.V. -2.6pF | ——— | C.V. +2.6pF |
| | | 5kHz | C.V. - 4pF | ——— | C.V. + 4pF |
| | | 10kHz | C.V. -1.3pF | ——— | C.V. +1.3pF |
| | | 50kHz | C.V. - 4pF | ——— | C.V. + 4pF |
| | | 100kHz | C.V. -1.3pF | ——— | C.V. +1.3pF |
| | | 500kHz | C.V. - 4pF | ——— | C.V. + 4pF |
| | | 1MHz | C.V. -1.3pF | ——— | C.V. +1.3pF |
| | Dissipation | 100Hz | -0.025 | ——— | +0.025 |
| | | 400Hz | -0.006 | ——— | +0.006 |
| | | 1kHz | - 0.0038 | ——— | + 0.0038 |
| | | 5kHz | -0.0016 | ——— | +0.0016 |
| | | 10kHz | -0.0012 | ——— | +0.0012 |
| | | 50kHz | -0.0016 | ——— | +0.0016 |
| | | 100kHz | -0.0012 | ——— | +0.0012 |
| | | 500kHz | -0.0016 | ——— | +0.0016 |
| | | 1MHz | -0.0012 | ——— | +0.0012 |

C.V. = Calibrated Value

| Paragraph Number | Test | | Minimum | Result Actual | Maximum |
|---|---|---|---|---|---|
| 4-15 | Resistance Accuracy Test | | | | |
| | Standard Resistor : 100Ω | 5Hz | C.V. -1.29Ω | ——— | C.V. +1.29Ω |
| | | 10Hz | C.V. -0.71Ω | ——— | C.V. +0.71Ω |
| | | 50Hz | C.V. -0.25Ω | ——— | C.V. + 0.25Ω |
| | | 100Hz | C.V. - 0.19Ω | ——— | C.V. + 0.19Ω |
| | | 500Hz | C.V. -0.13Ω | ——— | C.V. + 0.13Ω |
| | | 1kHz | C.V. - 0.13Ω | ——— | C.V. + 0.13Ω |
| | | 5kHz | C.V. - 0.13Ω | ——— | C.V. + 0.13Ω |
| | | 10kHz | C.V. - 0.13Ω | ——— | C.V. + 0.13Ω |
| | | 50kHz | C.V. - 0.13Ω | ——— | C.V. + 0.13Ω |
| | | 100kHz | C.V. - 0.13Ω | ——— | C.V. + 0.13Ω |
| | | 500kHz | C.V. - 0.13Ω | ——— | C.V. + 0.13Ω |
| | | 1MHz | C.V. - 0.13Ω | ——— | C.V. + 0.13Ω |
| | | 5MHz | C.V. -0.88Ω | ——— | C.V. + 0.88Ω |
| | | 10MHz | C.V. - 2.91Ω | ——— | C.V. + 2.91Ω |
| | | 13MHz | C.V. - 4.74Ω | ——— | C.V. + 4.74Ω |
| | Standard Resistor : 1kΩ | 5Hz | C.V. -22.6Ω | ——— | C.V. + 22.6Ω |
| | | 10Hz | C.V. -12.9Ω | ——— | C.V. + 12.9Ω |
| | | 50Hz | C.V. -5.23Ω | ——— | C.V. + 5.23Ω |
| | | 100Hz | C.V. -4.2Ω | ——— | C.V. + 4.2Ω |
| | | 500Hz | C.V. -3.3Ω | ——— | C.V. + 3.3Ω |
| | | 1kHz | C.V. - 3.3Ω | ——— | C.V. + 3.3Ω |
| | | 5kHz | C.V. - 3.3Ω | ——— | C.V. + 3.3Ω |
| | | 10kHz | C.V. - 3.3Ω | ——— | C.V. + 3.3Ω |
| | | 50kHz | C.V. - 3.3Ω | ——— | C.V. + 3.3Ω |
| | | 100kHz | C.V. - 3.3Ω | ——— | C.V. + 3.3Ω |
| | | 500kHz | C.V. - 3.3Ω | ——— | C.V. + 3.3Ω |
| | | 1MHz | C.V. - 3.3Ω | ——— | C.V. + 3.3Ω |
| | | 5MHz | C.V. -10.7Ω | ——— | C.V. + 10.7Ω |
| | | 10MHz | C.V. - 31.0Ω | ——— | C.V. + 31.0Ω |
| | | 13MHz | C.V. - 49.3Ω | ——— | C.V. + 49.3Ω |

| Paragraph Number | Test | | Result | | |
|---|---|---|---|---|---|
| | | | Minimum | Actual | Maximum |
| 4-15 (continued) | Resistance Accuracy Test | | | | |
| | Standard Resistor : 10kΩ | 5Hz | C.V. - 0.206kΩ | ——— | C.V. + 0.206kΩ |
| | | 10Hz | C.V. - 0.119kΩ | ——— | C.V. + 0.119kΩ |
| | | 50Hz | C.V. - 0.050kΩ | ——— | C.V. + 0.050kΩ |
| | | 100Hz | C.V. - 0.041kΩ | ——— | C.V. + 0.041kΩ |
| | | 500 Hz | C.V. - 0.033kΩ | ——— | C.V. + 0.033kΩ |
| | | 1kHz | C.V. - 0.033kΩ | ——— | C.V. + 0.033kΩ |
| | | 5kHz | C.V. - 0.033kΩ | ——— | C.V. + 0.033kΩ |
| | | 10kHz | C.V. - 0.033kΩ | ——— | C.V. + 0.033kΩ |
| | | 50kHz | C.V. - 0.033kΩ | ——— | C.V. + 0.033kΩ |
| | | 100kHz | C.V. - 0.033kΩ | ——— | C.V. + 0.033kΩ |
| | | 500kHz | C.V. - 0.033kΩ | ——— | C.V. + 0.033kΩ |
| | | 1MHz | C.V. - 0.033kΩ | ——— | C.V. + 0.033kΩ |
| | Standard Resistor : 100kΩ | 5Hz | C.V. - 2.43kΩ | ——— | C.V. + 2.43kΩ |
| | | 10Hz | C.V. - 1.38kΩ | ——— | C.V. + 1.38kΩ |
| | | 50Hz | C.V. - 0.54kΩ | ——— | C.V. + 0.54kΩ |
| | | 100Hz | C.V. - 0.43kΩ | ——— | C.V. + 0.43kΩ |
| | | 500Hz | C.V. - 0.33kΩ | ——— | C.V. + 0.33kΩ |
| | | 1kHz | C.V. - 0 33kΩ | ——— | C.V. + 0.33kΩ |
| | | 5kHz | C.V. - 0.33kΩ | ——— | C.V. + 0.33kΩ |
| | | 10kHz | C.V. - 0.33kΩ | ——— | C.V. + 0.33kΩ |
| | | 50kHz | C.V. - 0.33kΩ | ——— | C.V. + 0.33kΩ |
| | | 100kHz | C.V. - 0.33kΩ | ——— | C.V. + 0.33kΩ |
| 4-17 | Frequency Phase Accuracy Test | | | | |
| | | 100Hz | C.V. - 0.033Ω | ——— | C.V. + 0.033Ω |
| | | 400Hz | C.V. - 0.028Ω | ——— | C.V. + 0.028Ω |
| | | 1kHz | C.V. - 0.026Ω | ——— | C.V. + 0.026Ω |
| | | 5kHz | C.V. - 0.026Ω | ——— | C.V. + 0.026Ω |
| | | 10kHz | C.V. - 0.026Ω | ——— | C.V. + 0.026Ω |
| | | 50kHz | C.V. - 0.026Ω | ——— | C.V. + 0.026Ω |
| | | 100kHz | C.V. - 0.027Ω | ——— | C.V. + 0.027Ω |
| | | 500kHz | C.V. - 0.029Ω | ——— | C.V. + 0.029Ω |
| | | 1MHz | C.V. - 0.032Ω | ——— | C.V. + 0.032Ω |
| | | 5MHz | C.V. - 0.158Ω | ——— | C.V. + 0.158Ω |
| | | 10MHz | C.V. - 0.462Ω | ——— | C.V. + 0.462Ω |
| | | 13MHz | C.V. - 0.726Ω | ——— | C.V. + 0.726Ω |

C.V. = Calibrated Value

| Paragraph Number | Test | | Minimum | Result Actual | Maximum |
|---|---|---|---|---|---|
| 4-19 | Amplitude/Phase (0dB) Accuracy Test | | | | |
| | Amplitude | 5Hz | - 0.096dB | ——— | + 0.096dB |
| | | 10Hz | - 0.056dB | ——— | + 0.056dB |
| | | 50Hz | - 0.024dB | ——— | + 0.024dB |
| | | 100Hz | - 0.020dB | ——— | + 0.020dB |
| | | 500Hz | - 0.020dB | ——— | + 0.020dB |
| | | 1kHz | - 0.020dB | ——— | + 0.020dB |
| | | 5kHz | - 0.020dB | ——— | + 0.020dB |
| | | 10kHz | - 0.020dB | ——— | + 0.020dB |
| | | 50kHz | - 0.090dB | ——— | + 0.090dB |
| | | 100kHz | - 0.090dB | ——— | + 0.090dB |
| | | 500kHz | - 0.090dB | ——— | + 0.090dB |
| | | 1MHz | - 0.090dB | ——— | + 0.090dB |
| | | 5MHz | - 0.250dB | ——— | + 0.250dB |
| | | 10MHz | - 0.450dB | ——— | + 0.450dB |
| | | 13MHz | - 0.570dB | ——— | + 0.570dB |
| | Phase | 5Hz | - 0.48 deg | ——— | + 0.48 deg |
| | | 10Hz | - 0.28 deg | ——— | + 0.28 deg |
| | | 50Hz | - 0.12deg | ——— | + 0.12deg |
| | | 100Hz | - 0.10 deg | ——— | + 0.10 deg |
| | | 500Hz | - 0.10 deg | ——— | + 0.10 deg |
| | | 1kHz | - 0.10 deg | ——— | + 0.10 deg |
| | | 5kHz | -0.10deg | ——— | +0.10deg |
| | | 10kHz | -0.10deg | ——— | +0.10deg |
| | | 50kHz | - 0.16 deg | ——— | + 0.16 deg |
| | | 100kHz | - 0.16 deg | ——— | + 0.16 deg |
| | | 500kHz | - 0.16 deg | ——— | + 0.16 deg |
| | | 1MHz | - 0.16 deg | ——— | + 0.16 deg |
| | | 5MHz | - 0.80deg | ——— | + 0.80deg |
| | | 10MHz | - 1.60 deg | ——— | + 1.60 deg |
| | | 13MHz | - 2.08 deg | ——— | + 2.08 deg |
| 4-21 | Amplitude Accuracy Test | | | | |
| | Attenuator setting : - 10dB | 50kHz | C.V. - 0.090dB | ——— | C.V. +0.090dB |
| | | 1MHz | C.V. - 0.090dB | ——— | C.V. + 0.090dB |
| | | 10MHz | C.V. - 0.450dB | ——— | C.V. + 0.450dB |
| | Attenuator setting : - 30dB | 50 kHz | C.V. - 0.16dB | ——— | C.V. + 0.16dB |
| | | 1MHz | C.V. - 0.16dB | ——— | C.V. + 0.16dB |
| | | 10MHz | C.V. - 0.88dB | ——— | C.V. + 0.88dB |
| | Attenuator setting : - 50dB | 50 kHz | C.V. - 0.24dB | ——— | C.V. + 0.24dB |
| | | 1MHz | C.V. - 0.24dB | ——— | C.V. + 0.24dB |
| | | 10MHz | C.V. - 1.32dB | ——— | C.V. + 1.32dB |

C.V. = Calibrated Value

| Paragraph Number | Test | Minimum | Result Actual | Maximum |
|---|---|---|---|---|
| 4-21 (continued) | Amplitude Accuracy Test | | | |
| | Attenuator setting : - 70dB 50 kHz | C.V. - 2.04dB | ——— | C.V. + 2.04dB |
| | 1MHz | C.V. - 2.04dB | ——— | C.V. + 2.04dB |
| | 10MHz | C.V. - 11.22dB | ——— | C.V. + 11.22dB |
| 4-23 | Absolute Amplitude Accuracy Test | | | |
| | 5Hz | C.V. - 0.60dBV | ——— | C.V. + 0.60dBV |
| | 10Hz | C.V. - 0.50dBV | ——— | C.V. + 0.50dBV |
| | 30Hz | C.V. - 0.43dBV | ——— | C.V. + 0.43dBV |
| | 100Hz | C.V. - 0.40dBV | ——— | C.V. + 0.40dBV |
| | 300Hz | C.V. - 0.40dBV | ——— | C.V. + 0.40dBV |
| | 1kHz | C.V. - 0.40dBV | ——— | C.V. + 0.40dBV |
| | 3kHz | C.V. - 0.40dBV | ——— | C.V. + 0.40dBV |
| | 10kHz | C.V. - 0.40dBV | ——— | C.V. + 0.40dBV |
| | 30kHz | C.V. - 0.40dBV | ——— | C.V. + 0.40dBV |
| | 75kHz | C.V. - 0.40dBV | ——— | C.V. + 0.40dBV |
| | 100kHz | C.V. - 0.40dBV | ——— | C.V. + 0.40dBV |
| | 300kHz | C.V. - 0.40dBV | ——— | C.V. + 0.40dBV |
| | 1MHz | C.V. - 0.40dBV | ——— | C.V. + 0.40dBV |
| | 3MHz | C.V. - 0.64dBV | ——— | C.V. + 0.64dBV |
| | 10MHz | C.V. - 1.20dBV | ——— | C.V. + 1.20dBV |
| | 13MHz | C.V. - 1.44dBV | ——— | C.V. + 1.44dBV |
| 4-25 | Phase Accuracy Test | | | |
| | 0 deg | | ——— | |
| | - 22.5 deg | - 22.66deg | ——— | - 22.34deg |
| | - 45 deg | - 45.16deg | ——— | - 44.84deg |
| | - 67.5 deg | - 67.66deg | ——— | - 67.34deg |
| | - 90 deg | - 90.16deg | ——— | - 89.84deg |
| | - 112.5 deg | - 112.66deg | ——— | - 112.34deg |
| | - 135 deg | - 135.16deg | ——— | - 134.84deg |
| | - 157.5 deg | - 157.66deg | ——— | - 157.34deg |
| | - 180 deg | - 180.16deg | ——— | -179.84deg |
| | + 157.5 deg | + 157.34deg | ——— | + 157.66deg |
| | + 135 deg | + 134.84deg | ——— | + 135.16deg |
| | + 112.5 deg | + 112.34deg | ——— | + 112.66deg |
| | + 90 deg | + 89.84deg | ——— | + 90.16deg |
| | + 67.5 deg | + 67.34deg | ——— | + 67.66deg |
| | + 45 deg | + 44.84deg | ——— | + 45.16deg |
| | +22.5 deg | + 22.34deg | ——— | + 22.66deg |

C.V. = Calibrated Value

| Paragraph Number | Test | Minimum | Result Actual | Maximum |
|---|---|---|---|---|
| 4-27 | DC Bias Voltage Accuracy Test | | | |
| | 0V | - 5mV | ——— | + 5mV |
| | 10mV | + 5mV | ——— | + 15mV |
| | 100mV | + 95mV | ——— | + 105mV |
| | 1V | + 0.990V | ——— | + 1.010V |
| | 10V | + 9.945V | ——— | + 10.055V |
| | 35V | + 34.82V | ——— | + 35.18V |
| | - 10mV | - 15mV | ——— | - 5mV |
| | - 100mV | - 105mV | ——— | - 95mV |
| | - 1V | - 1.010V | ——— | - 0.990V |
| | - 10V | - 10.055V | ——— | - 9.945V |
| | - 35V | - 35.18V | ——— | - 34.82V |
| 4-29 | Recorder Output Voltage Accuracy Test | | | |
| | 0V (LL) | - 20mV | ——— | + 20mV |
| | + 1V (UR) | + 0.995V + 0V* | ——— | + 1.005V + 0V* |
| | - 1V (SELFTEST 7) | - 1.005V + 0V* | ——— | - 0.995V + 0V* |
| | *D.C. OFFSET [ = Actual voltage of 0V (LL) ] | | | |
| 4-31 | HP-IB Test | | | |
| | Remote/Local Test | ☐ PASS | ——— | ☐ FAIL |
| | Listen/Talk Test | ☐ PASS | ——— | ☐ FAIL |
| | Listener Test – 1 | ☐ PASS | ——— | ☐ FAIL |
| | Listener Test – 2 | ☐ PASS | ——— | ☐ FAIL |
| | Talker Test | ☐ PASS | ——— | ☐ FAIL |
| | Data Output Test | ☐ PASS | ——— | ☐ FAIL |
| | Complete Data Output Test – 1 | ☐ PASS | ——— | ☐ FAIL |
| | Complete Data Output Test – 2 | ☐ PASS | ——— | ☐ FAIL |
| | Complete Data Output Test – 3 | ☐ PASS | ——— | ☐ FAIL |
| | SRQ Test | ☐ PASS | ——— | ☐ FAIL |

# CAUTIONS ON OPERATION

## EXTERNAL BIASING: PRECAUTIONS AND LIMITATIONS

When measuring a device or circuit that is biased from an external source, DO NOT allow the dc voltage applied to the 4192A's measurement terminals (LCUR, LPOT, HPOT, HCUR, CHANNEL A, and CHANNEL B) to exceed the limits given in Figures A and B, below.

If a dc voltage exceeding the limits shown in Figure A is applied to the UNKNOWN terminals, an internal fuse, A1F1, will blow to protect the 4192A's measurement circuits. The symptoms of and the replacement procedure for a blown A1F1 are given on the reverse side of this supplement. Note, however, that this problem will not occur if the 4192A's built-in dc bias source is used.

Special caution should be observed when making gain-phase measurements on active networks and circuits. If excessive voltage (>±35V) is applied to CHANNEL A or CHANNEL B, serious damage to the 4192A will result.

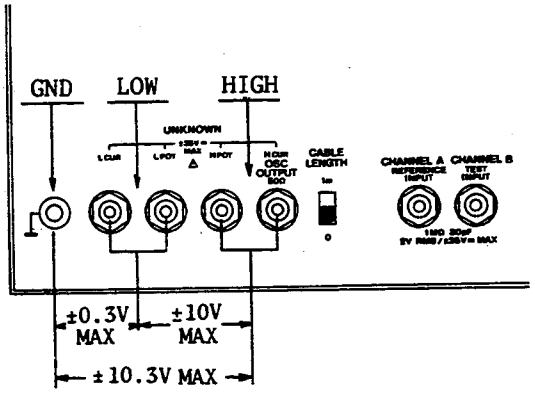


Figure A. External Bias Limits for Impedance Measurements

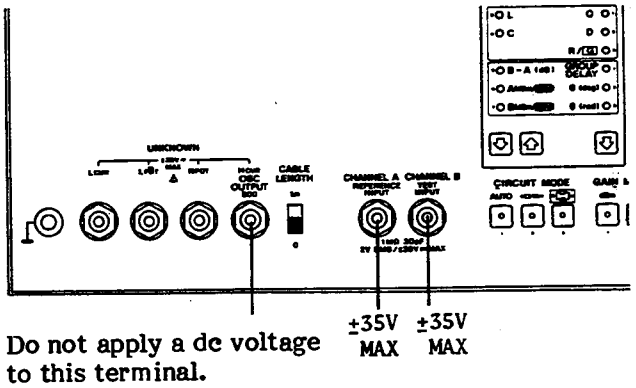


Figure B. External Bias Limits for Gain-Phase Measurements

Instructions for increasing the external bias voltage limits for impedance measurements are given in Figure 3-30 (see "CAUTIONS") and in paragraph 3-107 of the 4192A Operation and Service Manual.

## SYMPTOMS OF A BLOWN A1F1

1. No test signal at the HCUR terminal
2. No internal dc bias voltage at the HCUR terminal
3. Excessive display fluctuation during impedance measurements

If the 4192A exhibits these symptoms, A1F1 has blown and must be replaced. Two replacement fuses are furnished with the 4192A. Additional fuses are available from Hewlett-Packard. Order PN 2110-0650.

## HOW TO REPLACE A1F1

1. Turn the 4192A off and disconnect the power cable.
2. Turn the 4192A upside down.
3. Remove the two bottom feet from the rear panel and then fully loosen the bottom cover retaining screw. Refer to Figure C.
4. Slide the bottom cover towards the rear of the instrument and lift it off.
5. Remove A1F1 (indicated by arrow in Figure D) from its socket and carefully insert the new fuse (Figure E).
6. Replace the bottom cover and instrument feet.

If the 4192A continues to exhibit the above mentioned symptoms after A1F1 has been replaced, contact the nearest Hewlett-Packard Sales and Service Office.

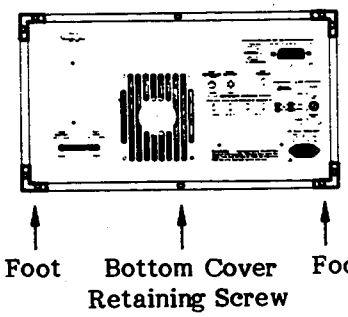


Figure C. Rear Panel

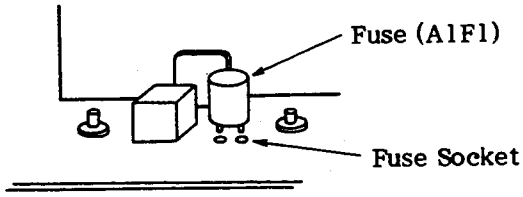


Figure E. A1F1 Fuse

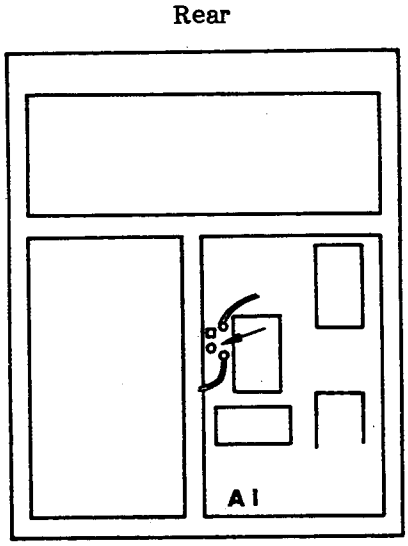


Figure D. Botton View of 4192A

Agilent Technologies
Innovating the HP Way

# DECLARATION OF CONFORMITY

According to ISO/IEC Guide 22 and CEN/CENELEC EN 45014

**Manufacturer's Name:** Agilent Technologies Japan, Ltd.
**Manufacturer's Address:** Component Test PGU-Kobe
1-3-2, Murotani, Nishi-ku, Kobe-shi,
Hyogo, 651-2241 Japan

**Declares, that the product**

**Product Name:** LF Impedance Analyzer
**Model Number:** 4192A
**Product Options:** All options and customized products based on the above

**Is in conformity with:**

**EMC** European Council Directive 89/336/EEC and carries the CE-marking accordingly
EMC Standards required by the Australia Radio Communications Act
IEC 61326-1:1997+A1 / EN 61326-1:1997+A1
CISPR 11:1990 / EN 55011:1991 / AS/NZS 2064.1– Group 1 Class A [1]
IEC 61000-4-2:1995 / EN 61000-4-2:1995 (4 kV CD, 8 kV AD)
IEC 61000-4-3:1995 / EN 61000-4-3:1996 (3 V/m 80% AM 27 - 1000 MHz)
IEC 61000-4-4:1995 / EN 61000-4-4:1995 (1 kV power line, 0.5 kV Signal line)
IEC 61000-4-5:1995 / EN 61000-4-5:1995 (0.5 kV line-line, 1 kV line-earth)
IEC 61000-4-6:1996 / EN 61000-4-6:1996 (3 V 80% AM, power line)
IEC 61000-4-11:1994 / EN 61000-4-11:1994 (100% 1cycle)

**Safety** European Council Directive 73/23/EEC and carries the CE-marking accordingly
IEC 61010-1:1990+A1+A2 / EN 61010-1:1993+A2

**Additional Information:**

LEDs in this product are Class 1 in accordance with EN 60825-1:1994.

[1] The product was tested in a typical configuration.

Dec. 15, 1999
Date

Yukihiko Ota
Name Yukihiko Ota / Quality Engineering Manager

For further information, please contact your local Agilent Technologies sales office, agent or distributor.

## Herstellerbescheinigung

GERÄUSCHEMISSION

LpA < 70 dB
am Arbeitsplatz
normaler Betrieb
nach DIN 45635 T. 19

## Manufacturer's Declaration

ACOUSTIC NOISE EMISSION

LpA < 70 dB
operator position
normal operation
per ISO 7779

# Safety Summary

When you notice any of the unusual conditions listed below, immediately terminate operation and disconnect the power cable.
Contact your local Agilent Technologies sales representative or authorized service company for repair of the instrument. If you continue to operate without repairing the instrument, there is a potential fire or shock hazard for the operator.

- Instrument operates abnormally.
- Instrument emits abnormal noise, smell, smoke or a spark-like light during the operation.
- Instrument generates high temperature or electrical shock during operation.
- Power cable, plug, or receptacle on instrument is damaged.
- Foreign substance or liquid has fallen into the instrument.

# 使用上の安全について

以下のような異常が見られたときは、直ちに使用を中止して電源プラグを抜き、最寄りの当社セールス・オフィスまたは当社指定のサービス会社に連絡して修理を受けて下さい。そのまま使用を続けると、火災や感電のおそれがあります。

- 正常な動作をしない。
- 動作中に異音、異臭、発煙あるいはスパークのような光が発生した。
- 使用時に異常な高温や電気ショックを感じた。
- 電源コード、電源プラグ、電源コネクタが損傷した。
- 製品内に異物、液体などが入った。

Agilent 4192A LF Impedance Analyzer

# Operation Manual

Agilent Technologies

Agilent Part No. 04192-90011
Printed in JAPAN March 2000

## Notice

The information contained in this document is subject to change without notice.

This document contains proprietary information that is protected by copyright. All rights are reserved. No part of this document may be photocopied, reproduced, or translated to another language without the prior written consent of the Agilent Technologies.

Agilent Technologies Japan, Ltd.
Component Test PGU-Kobe
1-3-2, Murotani, Nishi-ku, Kobe-shi,
Hyogo, 651-2241 Japan

©Copyright 1986, 1996, 2000 Agilent Technologies Japan, Ltd.

## Manual Printing History

The manual printing date and part number indicate its current edition. The printing date changes when a new edition is printed. (Minor corrections and updates that are incorporated at reprint do not cause the date to change.) The manual part number changes when extensive technical changes are incorporated.

1986 ..... First Edition

December 1996 ..... Second Edition (part number: 04192-90011)

March 2000 ..... Third Edition (part number: 04192-90011)

## Certification

Agilent Technologies certifies that this product met its published specifications at the time of shipment from the factory. Agilent Technologies further certifies that its calibration measurements are traceable to the United States National Institute of Standards and Technology, to the extent allowed by the Institution's calibration facility, or to the calibration facilities of other International Standards Organization members.

## Warranty

This Agilent Technologies instrument product is warranted against defects in material and workmanship for a period of one year from the date of shipment, except that in the case of certain components listed in *General Information* of this manual, the warranty shall be for the specified period. During the warranty period, Agilent Technologies will, at its option, either repair or replace products that prove to be defective.

For warranty service or repair, this product must be returned to a service facility designated by Agilent Technologies. Buyer shall prepay shipping charges to Agilent Technologies and Agilent Technologies shall pay shipping charges to return the product to Buyer. However, Buyer shall pay all shipping charges, duties, and taxes for products returned to Agilent Technologies from another country.

Agilent Technologies warrants that its software and firmware designated by Agilent Technologies for use with an instrument will execute its programming instruction when property installed on that instrument. Agilent Technologies does not warrant that the operation of the instrument, or software, or firmware will be uninterrupted or error free.

## Limitation Of Warranty

The foregoing warranty shall not apply to defects resulting from improper or inadequate maintenance by Buyer, Buyer-supplied software or interfacing, unauthorized modification or misuse, operation outside the environmental specifications for the product, or improper site preparation or maintenance.

*No other warranty is expressed or implied. Agilent Technologies specifically disclaims the implied warranties of merchantability and fitness for a particular purpose.*

## Exclusive Remedies

*The remedies provided herein are buyer's sole and exclusive remedies. Agilent Technologies shall not be liable for any direct, indirect, special, incidental, or consequential damages, whether based on contract, tort, or any other legal theory.*

## Assistance

Product maintenance agreements and other customer assistance agreements are available for Agilent Technologies products.

For any assistance, contact your nearest Agilent Technologies Sales and Service Office. Addresses are provided at the back of this manual.

## Safety Summary

The following general safety precautions must be observed during all phases of operation, service, and repair of this instrument. Failure to comply with these precautions or with specific *WARNINGS* elsewhere in this manual may impair the protection provided by the equipment. In addition it violates safety standards of design, manufacture, and intended use of the instrument.
*The Agilent Technologies assumes no liability for the customer's failure to comply with these requirements.*

### Ground The Instrument

To avoid electric shock hazard, the instrument chassis and cabinet must be connected to a safety earth ground by the supplied power cable with earth blade.

### DO NOT Operate In An Explosive Atmosphere

Do not operate the instrument in the presence of flammable gasses or fumes. Operation of any electrical instrument in such an environment constitutes a definite safety hazard.

### Keep Away From Live Circuits

Operating personnel must not remove instrument covers. Component replacement and internal adjustments must be made by qualified maintenance personnel. Do not replace components with the power cable connected. Under certain conditions, dangerous voltages may exist even with the power cable removed. To avoid injuries, always disconnect power and discharge circuits before touching them.

### DO NOT Service Or Adjust Alone

Do not attempt internal service or adjustment unless another person, capable of rendering first aid and resuscitation, is present.

### DO NOT Substitute Parts Or Modify Instrument

Because of the danger of introducing additional hazards, do not install substitute parts or perform unauthorized modifications to the instrument. Return the instrument to a Agilent Technologies Sales and Service Office for service and repair to ensure that safety features are maintained.

### Dangerous Procedure Warnings

**Warnings** , such as the example below, precede potentially dangerous procedures throughout this manual. Instructions contained in the warnings must be followed.

**Warning**

**Dangerous voltages, capable of causing death, are present in this instrument. Use extreme caution when handling, testing, and adjusting this instrument.**

## SAFETY SYMBOLS

General Definitions of Safety Symbols Used On Equipment or In Manuals.

Instruction manual symbol: the product will be marked with this symbol when it is necessary for the user to refer to the instruction manual in order to protect against damage to the instrument.

Indicates dangerous voltage (terminals fed from the interior by voltage exceeding 1000 volts must be so marked).

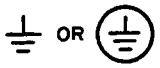


Protective conductor terminal. For protection against electrical shock in case of a fault. Used with field wiring terminals to indicate the terminal which must be connected to ground before operating equipment.

Low-noise or noiseless, clean ground (earth) terminal. Used for a signal common, as well as providing protection against electrical shock in case of fault. A terminal marked with this symbol must be connected to ground in the manner described in the installation (operating) manual, and before operating the equipment.

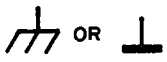


Frame or chassis terminal. A connection to the frame (chassis) of the equipment which normally includes all exposed metal structures.

Alternating current (power line).

Direct current (power line).

Alternating or direct current (power line).

**WARNING** — A **WARNING** denotes a hazard. It calls attention to a procedure, practice, condition or the like, which, if not correctly performed or adhered to, could result in injury or death to personnel.

**CAUTION** — The **CAUTION** sign denotes a hazard. It calls attention to an operating procedure, practice, condition or the like, which, if not correctly performed or adhered to, could result in damage to or destruction of part or all of the product.

Note — A Note denotes important information. It calls attention to a procedure, practice, condition or the like, which is essential to highlight.

## Herstellerbescheinigung

Hiermit wird bescheinigt, daß das Gerät HP 4192A LF Impedance Analyzer in Übereinstimmung mit den Bestimmungen von Postverfügung 1046/84 funkentstört ist.

Der Deutschen Bundespost wurde das Inverkehrbringen dieses Gerätes angezeigt und die Berechtigung zur Überprüfung der Serie auf Einhaltung der Bestimmungen eingeräumt.

Anm: Werden Meß- und Testgeräte mit ungeschirmten Kabeln und/oder in offenen Meßaufbauten verwendet, so ist vom Betreiber sicherzustellen, daß die Funk-Entstörbestimmungen unter Betriebsbedingungen an seiner Grundstücksgrenze eingehalten werden.

GERÄUSCHEMISSION

Lpa < 70 dB
am Arbeitsplatz
normaler Betrieb
nach DIN 45635 T. 19

## Manufacturer's Declaration

This is to certify that this product, the HP 4192A LF Impedance Analyzer, meets the radio frequency interference requirements of directive 1046/84. The German Bundespost has been notified that this equipment was put into circulation and was granted the right to check the product type for compliance with these requirements.

Note: If test and measurement equipment is operated with unsereened cables and/or used for measurements on open set-ups, the user must insure that under these operating conditions, the radio frequency interference limits are met at the border of his premises.

ACOUSTIC NOISE EMISSION

Lpa < 70 dB
operator position
normal operation
per ISO 7779

# TABLE OF CONTENTS


| Section | Title | Page |
|---|---|---|
| I | GENERAL INFORMATION | |
| 1-1. | Introduction | 1-1 |
| 1-4. | Description | 1-1 |
| 1-12. | Specifications | 1-3 |
| 1-14. | Safety Considerations | 1-3 |
| 1-17. | Instruments Covered by Manual | 1-3 |
| 1-22. | Options | 1-18 |
| 1-26. | Accessories Supplied | 1-18 |
| 1-28. | Accessories Available | 1-18 |
| II | INSTALLATION | |
| 2-1. | Introduction | 2-1 |
| 2-3. | Initial Inspection | 2-1 |
| 2-5. | Preparation for Use | 2-1 |
| 2-6. | Power Requirements | 2-1 |
| 2-8. | Line Voltage and Fuse Selection | 2-1 |
| 2-10. | Power Cable | 2-2 |
| 2-14. | Interconnections | 2-2 |
| 2-16. | Operating Environment | 2-4 |
| 2-19. | Installation Instructions | 2-4 |
| 2-21. | Installation of Options 907, 908 and 909 | 2-4 |
| 2-23. | Storage and Shipment | 2-5 |
| 2-24. | Environment | 2-5 |
| 2-26. | Packaging | 2-5 |
| III | OPERATION | |
| 3-1. | Introduction | 3-1 |
| 3-3. | Operating Instructions | 3-2 |
| 3-5. | Panel Features | 3-2 |
| 3-7. | Self Test | 3-14 |
| 3-9. | Initial Control Settings | 3-14 |
| 3-11. | Displays | 3-15 |
| 3-18. | Test Signal | 3-18 |
| 3-20. | Measurement Modes | 3-18 |
| 3-22. | Trigger Modes | 3-19 |
| 3-26. | Deviation Measurement | 3-19 |
| 3-30. | Continuous Memorization of Control Settings (SAVE and RECALL Functions) | 3-21 |
| 3-34. | Amplitude/Phase Measurement | 3-22 |
| 3-36. | Measurement Functions | 3-22 |
| 3-38. | Measurement Ranges | 3-22 |
| 3-40. | OSC Output | 3-23 |
| 3-42. | Channel A/B | 3-23 |
| 3-46. | Input Configurations | 3-24 |
| 3-48. | Impedance Matching | 3-26 |
| 3-55. | Measurement Time | 3-27 |
| 3-57. | Test Fixture Characteristics | 3-28 |
| 3-59. | Amplitude/Phase Measurement Operating Instructions | 3-32 |
| 3-61. | Swept Frequency Measurement | 3-34 |
| 3-63. | Group Delay Measurement | 3-37 |
| 3-65. | Impedance Measurements | 3-40 |
| 3-67. | Measurement Functions | 3-40 |
| 3-71. | Measurement Range | 3-41 |
| 3-73. | Circuit Mode | 3-46 |
| 3-75. | Unknown Terminals | 3-47 |
| 3-77. | Selection of Test Cable Length | 3-49 |
| 3-79. | ZERO Offset Adjustment | 3-49 |
| 3-82. | Actual Measurement Equivalent Circuit | 3-51 |
| 3-86. | Measured Values and Behavior of Components | 3-53 |
| 3-89. | Measurement Time | 3-53 |
| 3-91. | Test Signal Level Monitor | 3-55 |
| 3-93. | Characteristics of Test Fixtures | 3-56 |
| 3-95. | Impedance Measurement Operating Instructions | 3-57 |
| 3-97. | Swept Frequency Measurements | 3-60 |
| 3-99. | Swept OSC Level Measurements | 3-62 |
| 3-101. | Internal DC Bias Supply | 3-62 |
| 3-103. | Swept Bias Voltage Measurements | 3-64 |
| 3-105. | Measurement of Grounded Devices | 3-65 |
| 3-107. | External DC Bias | 3-65 |
| 3-109. | HP-IB Interface | 3-68 |

# TABLE OF CONTENTS


| Section | Title | Page |
|---|---|---|
| | 3-111. Connection to HP-IB | 3-68 |
| | 3-113. HP-IB Status Indicators | 3-68 |
| | 3-115. LOCAL Key | 3-68 |
| | 3-117. HP-IB Control Switch | 3-68 |
| | 3-119. HP-IB Interface Capabilities | 3-69 |
| | 3-121. Remote Program Code | 3-69 |
| | 3-123. Parameter Setting | 3-72 |
| | 3-125. Data Output | 3-72 |
| | 3-127. Service Request Status Byte | 3-74 |
| | 3-129. Programming Guide for 4192A | 3-75 |
| | 3-131. X-Y Recorder Output | 3-78 |
| | 3-133. Analog Outputs | 3-78 |
| | 3-135. Control Capabilities for Analog Output | 3-78 |
| | 3-137. External Synthesizer | 3-84 |
| | 3-139. Internal Control Switch | 3-86 |
| IV | PERFORMANCE TESTS | |
| | 4-1. Introduction | 4-1 |
| | 4-3. Equipment Required | 4-1 |
| | 4-5. Test Record | 4-1 |
| | 4-7. Calibration Cycle | 4-1 |
| | 4-9. Measurement Signal Frequency Accuracy Test | 4-2 |
| | 4-11. Measurement Signal Level Accuracy Test | 4-3 |
| | 4-13. Capacitance Accuracy Test | 4-4 |
| | 4-15. Resistance Accuracy Test | 4-6 |
| | 4-17. Frequency/Phase Accuracy Test | 4-8 |
| | 4-19. Amplitude/Phase Accuracy Test | 4-9 |
| | 4-21. Amplitude Accuracy Test | 4-10 |
| | 4-23. Absolute Amplitude Accuracy Test | 4-12 |
| | 4-25. Phase Accuracy Test | 4-13 |
| | 4-27. DC Bias Voltage Accuracy Test | 4-15 |
| | 4-29. Recorder Output Voltage Accuracy Test | 4-16 |
| | 4-31. HP-IB Interface Test | 4-17 |
| V | ADJUSTMENT | |
| | 5-1. Introduction | 5-1 |
| | 5-3. Safety Requirements | 5-1 |
| | 5-7. Equipment Required | 5-1 |
| | 5-9. Factory Selected Components | 5-1 |
| | 5-11. Adjustment Relationships | 5-1 |
| | 5-13. Adjustment Locations | 5-2 |
| | 5-15. Initial Operating Procedure | 5-2 |
| | 5-17. A7 Power Supply Adjustment | 5-5 |
| | 5-19. A8 DC Bias Check and Adjustment | 5-6 |
| | 5-21. A3 40MHz VCXO Adjustment/ 40MHz-IF VCO Adjustment | 5-8 |
| | 5-23. A4 API Adjustment | 5-10 |
| | 5-25. A4 S/H 100kHz Spurious Adjustment | 5-12 |
| | 5-27. A12 OSC Level Adjustment | 5-14 |
| | 5-29. A11 Input Channel Isolation Check | 5-15 |
| | 5-31. A11 Input Channel Tracking Adjustment | 5-16 |
| | 5-33. A11 IF Attenuator Adjustment | 5-17 |
| | 5-35. A11IF Amplifier Adjustment | 5-18 |
| | 5-37. A1 Null Detector DC Offset Adjustment | 5-19 |
| | 5-39. A1 $L_{CUR}$ Amplifier Output Level Adjustment | 5-20 |
| | 5-41. A1 $L_{CUR}$ Amplifier Phase Adjustment | 5-22 |
| | 5-43. A1 Phase Tracking Adjustment | 5-24 |
| | 5-45. A1 10MHz Phase Adjustment | 5-26 |
| | 5-47. A9 Analog Recorder Output Check and Adjustment | 5-28 |
| VI | REPLACEABLE PARTS | |
| | 6-1. Introduction | 6-1 |
| | 6-3. Abbreviations | 6-1 |
| | 6-5. Replaceable Parts List | 6-1 |
| | 6-7. Order Information | 6-2 |
| | 6-10. Direct Mail Order System | 6-2 |
| VII | MANUAL CHANGES | |
| | 7-1. Introduction | 7-1 |
| | 7-3. Manual Changes | 7-1 |

# TABLE OF CONTENTS


| Section | Title | Page |
|---|---|---|
| VIII | SERVICE ..... | 8-1 |
| 8-1. | Introduction ..... | 8-1 |
| 8-3. | Safety Considerations ..... | 8-1 |
| 8-5. | Theory of Operation .. | 8-1 |
| 8-7. | Recommended Test Equipment ..... | 8-1 |
| 8-9. | Troubleshooting ..... | 8-1 |
| 8-11. | Repair ..... | 8-1 |
| 8-13. | Basic Operating Theory | 8-2 |
| 8-15. | Auto-Balance Bridge Measurement Circuit ..... | 8-2 |
| 8-21. | Vector Voltage Ratio Detector ..... | 8-6 |
| 8-30. | Amplitude-Phase Measurement Circuit ..... | 8-10 |
| 8-34. | Block Diagram Discussion ..... | 8-12 |
| 8-35. | Analog Measurement Section ..... | 8-12 |
| 8-37. | Signal Source ..... | 8-12 |
| 8-40. | Reference Signal ... | 8-16 |
| 8-42. | Test Signal Output ..... | 8-16 |
| 8-44. | Auto-Balance Bridge ..... | 8-17 |
| 8-46. | Phase Tracking of the Bridge Control Loop ..... | 8-17 |
| 8-48. | IF Signal Source ... | 8-17 |
| 8-50. | Floating Measurement Circuit Configuration .... | 8-17 |
| 8-52. | Process Amplifier Stage .. | 8-18 |
| 8-54. | Phase Detection ... | 8-19 |
| 8-56. | A-D Conversion .... | 8-19 |
| 8-58. | Internal DC Bias Source ..... | 8-20 |
| 8-60. | Digital Control Section ..... | 8-24 |
| 8-62. | A6 Microprocessor Digital Control ... | 8-24 |
| 8-65. | I/O Signals ..... | 8-24 |
| 8-68. | Memory ..... | 8-24 |
| 8-71. | Read/Write Control ..... | 8-25 |
| 8-75. | IRQ Circuit ..... | 8-25 |
| 8-77. | Serial Port ..... | 8-25 |
| 8-79. | VRD Control ..... | 8-26 |
| 8-81. | Measurement Control Register ..... | 8-28 |
| 8-83. | Fractional N Control Register ..... | 8-28 |
| 8-85. | Status Buffer ..... | 8-28 |
| 8-87. | HP-IB Interface ... | 8-28 |
| 8-89. | Front-Panel Control ..... | 8-29 |
| 8-93. | A5 Display and Keyboard Control ..... | 8-30 |
| 8-96. | Timing Diagram Discussion ..... | 8-35 |
| 8-98. | Troubleshooting ..... | 8-38 |
| 8-100. | Warnings and Cautions ..... | 8-41 |
| 8-102. | Analog Section Troubleshooting To Assembly Level ..... | 8-41 |
| 8-104. | Primary Troubleshooting Guide ..... | 8-41 |
| 8-106. | Isolation of the Signal Source .... | 8-41 |
| 8-109. | Isolation of Trouble Causing UCL Display ..... | 8-42 |
| 8-111. | Isolation of the Range Control Circuit ..... | 8-43 |
| 8-113. | Isolation of the VRD Section (All and A2 Boards) .... | 8-44 |
| | Diagnostic Test Flow Diagram Notes ..... | 8-47 |
| 8-115. | Repair ..... | 8-67 |
| 8-116. | A6 Microprocessor Digital Control Board Disassembly .. | 8-67 |
| 8-118. | A2, A3, A4 and A9 Boards Disassembly .. | 8-68 |
| 8-120. | A1, A11 and A12 Boards Disassembly .. | 8-68 |
| 8-122. | A5 Display and Keyboard Control Board Disassembly .. | 8-68 |
| 8-124. | Product Safety Checks ..... | 8-70 |

## TABLE OF CONTENTS


| Section | Title | Page |
|---|---|---|
| 8-126. | A1 Range Resistor/ Null Detector ..... | 8-77 |
| 8-127. | Null Detector (1): I-V Converter and IF Amplifier ..... | 8-77 |
| 8-130. | Null Detector (2): Phase Detector and Phase Tracking Circuit ..... | 8-81 |
| | A1 Board Functional Test ..... | 8-83 |
| 8-133. | Range Resistor and Power Amplifiers ... | 8-87 |
| | A1 Board Functional Test ..... | 8-89 |
| 8-135. | A2 Phase Detector and Integrator ..... | 8-93 |
| | A3 Board Functional Test ..... | 8-100 |
| 8-137. | A3 Reference Frequency Generator ..... | 8-100 |
| | A4 Board Functional Test ..... | 8-108 |
| 8-139. | A4 Fractional N Loop (Analog) ..... | 8-108 |
| 8-140. | Phase Comparator, Loop Filter, API Current Source and VCO Circuits ..... | 8-108 |
| 8-142. | A4 Fractional N Loop (Digital) ..... | 8-114 |
| 8-143. | Fractional Down Counter and Fractional N Control Chip ..... | 8-114 |
| 8-145. | A7 Power Supply ..... | 8-125 |
| 8-147. | A8 Floating Power Supply/Bias Supply .. | 8-128 |
| 8-148. | Floating Power Supply Section ..... | 8-128 |
| 8-150. | Floating DC Bias Supply Section ..... | 8-131 |
| 8-152. | A9 Analog Recorder Output ..... | 8-135 |
| | A11 Board Functional Test ..... | 8-140 |
| 8-154. | A11 Process Amplifier ..... | 8-140 |
| 8-156. | A12 Modulator ..... | 8-147 |

# LIST OF TABLES


| Number | Title | Page |
|---|---|---|
| 1-1. | Specifications | 1-4 |
| 1-2. | General Information | 1-16 |
| 1-3. | Available Options | 1-18 |
| 1-4. | Accessories Available | 1-19 |
| 3-1. | 4192A Self Test | 3-14 |
| 3-2. | Operational Error-codes | 3-16 |
| 3-3. | Annunciations | 3-16 |
| 3-4. | SELF TEST Error-codes | 3-17 |
| 3-5. | Frequency and Output Level of Test Signal | 3-18 |
| 3-6. | Test Parameters | 3-20 |
| 3-7. | DISPLAY A/B Functions for Amplitude/Phase Measurements | 3-22 |
| 3-8. | Measurement Range for Amplitude/Phase Measurements | 3-22 |
| 3-9. | BNC Cables | 3-24 |
| 3-10. | Impedance Terminations | 3-24 |
| 3-11. | Balancing Transformers | 3-26 |
| 3-12. | Measurement Time for Amplitude/Phase Measurements | 3-27 |
| 3-13. | DISPLAY A/B Functions for Impedance Measurements | 3-40 |
| 3-14. | Measurement Parameter Formulas for Impedance Measurements | 3-41 |
| 3-15. | ZY RANGE | 3-41 |
| 3-16. | Measurement Range of θ/Q/D | 3-42 |
| 3-17. | Dissipation Factor Equations | 3-47 |
| 3-18. | ZERO Offset Adjustments | 3-50 |
| 3-19. | Measurement Time for Impedance Measurement | 3-54 |
| 3-20. | Test Signal Level Monitor | 3-55 |
| 3-21. | Typical Characteristics of Test Fixtures and Leads | 3-56 |
| 3-22. | HP-IB Interface Capabilities | 3-69 |
| 3-23. | Remote Program Code | 3-69 |
| 3-24. | Program Codes for Parameter Setting | 3-72 |
| 3-25. | Data Output Codes | 3-74 |
| 3-26. | Sample Program using 9825A/9835A | 3-75 |
| 3-27. | Connection of Recorder Output | 3-81 |
| 3-28. | Internal Control Switch | 3-87 |
| 4-1. | Recommended Test Equipment | 4-A |
| 4-2. | Measurement Signal Accuracy Test | 4-2 |
| 4-3. | Measurement Signal Level Accuracy Test | 4-4 |
| 4-4. | Capacitance Accuracy Test | 4-6 |
| 4-5. | Resistance Accuracy Test | 4-7 |
| 4-6. | Frequency-Phase Accuracy Test | 4-8 |
| 4-7. | Amplitude/Phase Accuracy Test | 4-10 |
| 4-8. | Amplitude Accuracy Test | 4-11 |
| 4-9. | Absolute Amplitude Accuracy Test | 4-13 |
| 4-10. | Phase Accuracy Test | 4-14 |
| 4-11. | DC Bias Voltage Accuracy Test | 4-15 |
| 4-12. | Recorder Output Voltage Accuracy Test | 4-16 |
| 4-13. | Controller Instructions and Operator Responses for Program 1 | 4-19 |
| 4-14. | Controller Instructions and Operator Responses for Program 4 | 4-23 |
| 4-15. | Controller Instructions and Operator Responses for Program 5 | 4-25 |
| 5-1. | Adjustable Components | 5 |
| 5-2. | Factory Selected Components | 5-4 |
| 5-3. | Adjustment Requirements | 5-4 |
| 5-4. | Manual Operating Self-Test Item | 5-30 |
| 6-1. | List of Reference Designators and Abbreviations | 6-1 |
| 6-2. | Manufacturers Code Lists | 6-2 |
| 6-3. | Replaceable Parts | 6-3 |
| 6-4. | Board Mounted Hardware | 6-42 |
| 6-5. | Interconnecting Cable Assemblies | 6-44 |
| 6-6. | Parts Identification | 6-46 |
| 7-1. | Manual Changes by Serial Number | 7-1 |

# LIST OF TABLES


| Number | Title | Page |
|---|---|---|
| 8-1. | Test Frequency and IF Signal Frequency Relationship .... | 8-18 |
| 8-2. | Digital Data Processing Time ..... | 8-35 |
| 8-3. | 4192A Error Message Meanings ..... | 8-39 |
| 8-4. | Front-Panel Troubleshooting Guide ..... | 8-40 |
| 8-5. | Null Detector Gain Control .. | 8-77 |
| 8-6. | Phase-Tracking Control Data States ..... | 8-82 |
| 8-7. | Relationship of the Source Resistor and the Measurement Range ..... | 8-88 |
| 8-8. | Relationship of the Range Resistor and the Measurement Range ..... | 8-88 |
| 8-9. | Integrator Charge Time Control ..... | 8-95 |
| 8-10. | IF Amplifier Gain Control .. | 8-143 |
| 8-11. | IF Conversion Mixer Gain Control ..... | 8-143 |

# LIST OF ILLUSTRATIONS


| Number | Title | Page |
|---|---|---|
| 1-1. | Model 4192A and Accessories | 1-1 |
| 1-2. | Serial Number Plate | 1-3 |
| 2-1. | Line Voltage and Fuse Selection | 2-2 |
| 2-2. | Available Power Codes | 2-3 |
| 2-3. | Rack Mount Kits | 2-4 |
| 3-1. | Contents of Section III | 3-1 |
| 3-2. | Front Panel Features | 3-2 |
| 3-3. | Rear Panel Features | 3-12 |
| 3-4. | External Trigger Pulse | 3-19 |
| 3-5. | Equivalent Output Circuit | 3-23 |
| 3-6. | Equivalent Input Circuit | 3-23 |
| 3-7. | Zt vs Frequency | 3-24 |
| 3-8. | Input Configurations | 3-25 |
| 3-9. | Cable Compensation | 3-28 |
| 3-10. | Overating Instructions for Amplitude/Phase Measurements | 3-32 |
| 3-11. | Operating Instructions for Swept-Frequency Amplitude/ Phase Measurements | 3-34 |
| 3-12. | Group Delay Measurement at Spot Frequency | 3-37 |
| 3-13. | Group Delay Measurement at Swept Frequency | 3-38 |
| 3-14. | Measurement Ranges and Resolution of the Group Delay Measurements | 3-39 |
| 3-15. | Display Digits for \|Z\|/ Y Measurements | 3-43 |
| 3-16. | Measurement Ranges, Resolution and Display Digits for L/C Measurements | 3-45 |
| 3-17. | Auto Changing of the Measurement Equivalent Circuit | 3-46 |
| 3-18. | Parallel and Series Parameter Relationship | 3-47 |
| 3-19. | Four Terminal Pair DUT Connectors | 3-48 |
| 3-20. | Four Terminal Pair Measurement Principle | 3-48 |
| 3-21. | Test Signal Phase on Test Cables | 3-49 |
| 3-22. | Residual Impedance | 3-49 |
| 3-23. | Stray Admittance | 3-51 |
| 3-24. | Parasitic Elements Incident to DUT Connections | 3-51 |
| 3-25. | Equivalent Circuits Including Residual Impedance | 3-51 |
| 3-26. | Effects of Residual Impedance | 3-52 |
| 3-27. | Effects of Resonance in Sample (Example) | 3-52 |
| 3-28. | Impedance Vector Representation | 3-53 |
| 3-29. | Typical Impedance Locus of an Inductor | 3-53 |
| 3-30. | Operating Instructions for Impedance Measurements | 3-57 |
| 3-31. | Operating Instructions for Swept-Frequency Impedance Measurements | 3-60 |
| 3-32. | Operating Instructions for Internal DC Bias Supply | 3-63 |
| 3-33. | Operating Instructions for Swept-Bias Voltage Impedance Measurements | 3-64 |
| 3-34. | External DC Voltage Supply | 3-66 |
| 3-35. | HP-IB Control Switch | 3-68 |
| 3-36. | Data Output Format for the 4192A | 3-73 |
| 3-37. | Status Byte for the 4192A | 3-75 |
| 3-38. | Sample Program 1 Using 9825A/9835A | 3-76 |
| 3-39. | Sample Program 2 Using 9825A/9835A | 3-77 |
| 3-40. | X-Y Recorder Output | 3-80 |
| 3-41. | Plot Areas of RECORDER OUTPUTS | 3-82 |
| 3-42. | External Synthesizer | 3-84 |
| 3-43. | A6S2 Internal Control Switch | 3-86 |
| 4-1. | Mesurement Signal Frequency Accuracy Test Setup | 4-2 |
| 4-2. | Measurement Signal Level Accuracy Test Setup | 4-3 |
| 4-3. | Capacitance Accuracy Test Setup | 4-4 |
| 4-4. | Resistance Accuracy Test Setup | 4-6 |
| 4-5. | Frequency/Phase Accuracy Test Setup | 4-8 |
| 4-6. | Amplitude/Phase Accuracy Test Setup | 4-8 |
| 4-7. | Amplitude Accuracy Test Setup | 4-10 |
| 4-8. | Absolute Amplitude Accuracy Test Setup | 4-12 |
| 4-9. | Phase Accuracy Test Setup | 4-13 |
| 4-10. | DC Bias Voltage Accuracy Test Setup | 4-15 |
| 4-11. | Recorder Output Voltage Accuracy Test Setup | 4-16 |

# LIST OF ILLUSTRATIONS


| Number | Title | Page |
|---|---|---|
| 4-12. | HP-IB Interface Test Setup | 4-17 |
| 5-1. | A7 Power Supply Adjustment Setup | 5-5 |
| 5-2. | A8 DC Bias Check and Adjustment Setup | 5-6 |
| 5-3. | A3 40MHz VCXO Adjustment/ 40MHz-IF VCO Adjustment Setup | 5-8 |
| 5-4. | A4 API Adjustment Setup | 5-10 |
| 5-5. | Waveforms at A4TP4 | 5-11 |
| 5-6. | A4 S/H 100kHz Spurious Adjustment Setup | 5-12 |
| 5-7. | Waveforms at A4TP4 | 5-13 |
| 5-8. | A12 OSC Level Adjustment Setup | 5-14 |
| 5-9. | A11 Input Channel Isolation Check Setup | 5-15 |
| 5-10. | A11 Input Channel Tracking Adjustment Setup | 5-16 |
| 5-11. | A11 IF Attenuator Adjustment Setup | 5-17 |
| 5-12. | A11 IF Amplifier Adjustment Setup | 5-18 |
| 5-13. | A1 Null Detector DC Offset Adjustment Setup | 5-19 |
| 5-14. | A1 $L_{CUR}$ Amplifier Phase Adjustment Setup | 5-20 |
| 5-15. | A1 $L_{CUR}$ Amplifier Phase Adjustment Setup | 5-22 |
| 5-16. | Waveforms at Outer Conductor of Feedthrough Termination | 5-23 |
| 5-17. | A1 Phase Tracking Adjustment Setup | 5-24 |
| 5-18. | 10MHz Phase Adjustment | 5-26 |
| 5-19. | A9 Analog Recorder Output Check and Adjustment | 5-28 |
| 5-20. | Adjustment Locations | 5-31 |
| 6-1. | Major Mechanical Parts on the Instrument Exterior - Exploded View | 6-45 |
| 6-2. | Major Mechanical Parts - Exploded View | 6-47 |
| 8-1. | Vector-Voltage-Current-Ratio Measurement Method Using the Range Resistor Amplifier | 8-2 |
| 8-2. | Two Oscillator Model of the Auto-Balance Bridge | 8-2 |
| 8-3. | Principle of the Auto-Balance Control | 8-3 |
| 8-4. | Actual Auto-Balance Bridge Circuit | 8-3 |
| 8-5. | Principle of the Modulator | 8-4 |
| 8-6. | Vector Voltage Ratio Detector Basic Block Diagram | 8-6 |
| 8-7. | Phase Detection Vector Diagram | 8-7 |
| 8-8. | Vector Voltage Ratio Detection Timing | 8-8 |
| 8-9. | Test Signal Voltage and Current Relationship to DUT's Impedance | 8-9 |
| 8-10. | Typical Network Analyzer Construction | 8-10 |
| 8-11. | Amplitude-Phase Measurement Circuit Basic Block Diagram | 8-10 |
| 8-12. | Amplitude-Phase Measurement Timing | 8-11 |
| 8-13. | 4192A Block Diagram | 8-12 |
| 8-14. | ÷ N/ ÷ N+1 Counter Block Diagram | 8-13 |
| 8-15. | API Circuit Block Diagram | 8-13 |
| 8-16. | Phase Relationship of the Phase Detector Inputs | 8-14 |
| 8-17. | Phase Accumulator Operating Principle | 8-15 |
| 8-18. | API Current Source Basic Block Diagram | 8-16 |
| 8-19. | Principle of the Multi-Slope A-D Conversion | 8-19 |
| 8-20. | A-D Converter Charge/ Discharge Control | 8-20 |
| 8-21. | DC Bias Circuit Simplified Schematic | 8-20 |
| 8-22. | Analog Measurement Section Block Diagram | 8-21 |
| 8-23. | Floating Measurement Circuit Configuration | 8-23 |
| 8-24. | Address Timing Control | 8-24 |
| 8-25. | VRD Control Circuit Block Diagram | 8-26 |
| 8-26. | A-D Conversion Data Counter Simplified Schematic | 8-27 |

## LIST OF ILLUSTRATIONS


| Number | Title | Page |
|---|---|---|
| 8-27. | HP-IB Interface Adapter Internal Register Configuration | 8-28 |
| 8-28. | Matrix Keyboard Operating Principle | 8-30 |
| 8-29. | Digital Control Section Block Diagram -- A6 Microprocessor Digital Control | 8-31 |
| 8-30. | Digital Control Section Block Diagram -- A5 Display and Keyboard Control | 8-33 |
| 8-31. | Measurement Control Timing Diagram | 8-37 |
| 8-32. | How to Use Troubleshooting Guides | 8-38 |
| 8-33. | Analog Measurement Section Troubleshooting Flow Diagram | 8-45 |
| 8-34. | Signature Analysis | 8-49 |
| 8-35. | 16343A Connection | 8-52 |
| 8-36. | Diagnostic Test Flow Diagram (Analog and Digital Section Isolation Procedure) | 8-53 |
| 8-37. | Signature Analysis Troubleshooting Flow Diagram | 8-54 |
| 8-38. | A6 Microprocessor Digital Control Board Disassembly | 8-67 |
| 8-39. | A5 Display and Keyboard Control Board Disassembly | 8-69 |
| 8-40. | Assembly Locations | 8-71 |
| 8-41. | Schematic Diagram Notes | 8-75 |
| 8-42. | A1 Range Resistor/Null Detector Board Troubleshooting Flow Diagram -- 1 of 3 | 8-76 |
| 8-43. | A1 Range Resistor/Null Detector Board Assembly Component Locations | 8-78 |
| 8-44. | A1 Range Resistor/Null Detector Board Assembly Schematic Diagram (Sheet 1 of 3) | 8-79 |
| 8-45. | A1 Range Resistor/Null Detector Board Troubleshooting Flow Diagram -- 2 of 3 | 8-80 |
| 8-46. | Phase Detector Circuit Operation | 8-81 |
| 8-47. | A1 Range Resistor/Null Detector Board Assembly Schematic Diagram (Sheet 2 of 3) | 8-85 |
| 8-48. | A1 Range Resistor/Null Detector Board Troubleshooting Flow Diagram -- 3 of 3 | 8-86 |
| 8-49. | A1 Range Resistor/Null Detector Board Assembly Schematic Diagram (Sheet 3 of 3) | 8-91 |
| 8-50. | A2 Phase Detector/A-D Converter Board Troubleshooting Flow Diagram | 8-92 |
| 8-51. | Basic Phase Detection | 8-93 |
| 8-52. | Phase Detection Vector Diagram | 8-93 |
| 8-53. | Full Wave Phase Detection | 8-93 |
| 8-54. | A2 Phase Detector/A-D Converter Board Assembly Component Locations | 8-96 |
| 8-55. | A2 Phase Detector/A-D Converter Board Assembly Schematic Diagram | 8-97 |
| 8-56. | A3 Reference Frequency Generator Board Troubleshooting Flow Diagram -- 1 of 2 | 8-98 |
| 8-57. | A3 Reference Frequency Generator Board Troubleshooting Flow Diagram -- 2 of 2 | 8-99 |
| 8-58. | A3 Reference Frequency Generator Block Diagram | 8-100 |
| 8-59. | A3 Reference Frequency Generator Board Assembly Component Locations | 8-102 |
| 8-60. | A3 Reference Frequency Generator Board Assembly Schematic Diagram | 8-103 |
| 8-61. | A4 Fractional N Loop Board Troubleshooting Flow Diagram -- 1 of 4 | 8-104 |
| 8-62. | A4 Fractional N Loop Board Troubleshooting Flow Diagram -- 2 of 4 | 8-105 |
| 8-63. | A4 Fractional N Loop Board Troubleshooting Flow Diagram -- 3 of 4 | 8-106 |
| 8-64. | A4 Fractional N Loop Board Troubleshooting Flow Diagram -- 4 of 4 | 8-107 |

## LIST OF ILLUSTRATIONS


| Number | Title | Page |
|---|---|---|
| 8-65. | A4 Fractional N Loop Block Diagram | 8-108 |
| 8-66. | API Current Source Simplified Schematic | 8-109 |
| 8-67. | API Control Timing Diagram | 8-111 |
| 8-68. | A4 Fractional N Loop Board Assembly Component Locations | 8-112 |
| 8-69. | A4 Fractional N Loop Board Assembly Schematic Diagram (Sheet 1 of 2) | 8-113 |
| 8-70. | 2/ 3 Counter Timing Diagram | 8-114 |
| 8-71. | A4 Fractional N Loop Board Assembly Schematic Diagram (Sheet 2 of 2) | 8-115 |
| 8-72. | A5 Display and Keyboard Control Board Assembly Component Locations | 8-116 |
| 8-73. | A5 Display and Keyboard Control Board Assembly Schematic Diagram | 8-117 |
| 8-74. | A6 Microprocessor Digital Control Board Assembly Component Locations | 8-118 |
| 8-75. | A6 Microprocessor Digital Control Board Assembly Schematic Diagram (Sheet 1 of 3) | 8-119 |
| 8-76. | A6 Microprocessor Digital Control Board Assembly Schematic Diagram (Sheet 2 of 3) | 8-121 |
| 8-77. | A6 Microprocessor Digital Control Board Assembly Schematic Diagram (Sheet 3 of 3) | 8-123 |
| 8-78. | A7 Power Supply Board Troubleshooting Flow Diagram | 8-124 |
| 8-79. | A7 Power Supply Board and A10 Battery and Charger Board Assembly Component Locations | 8-127 |
| 8-80. | A7 Power Supply Board and A10 Battery and Charger Board Assembly Schematic Diagram | 8-127 |
| 8-81. | A8 Floating Power Supply/ Bias Supply Board Assembly Component Locations | 8-129 |
| 8-82. | A8 Floating Power Supply/ Bias Supply Board Assembly Schematic Diagram (Sheet 1 of 2) | 8-129 |
| 8-83. | A8 Floating Power Supply/ Bias Supply Board Troubleshooting Flow Diagram (Bias Supply Section) | 8-130 |
| 8-84. | A8 Floating Power Supply/ Bias Supply Board Assembly Schematic Diagram (Sheet 2 of 2) | 8-133 |
| 8-85. | A9 Analog Recorder Output Board Troubleshooting Flow Diagram | 8-134 |
| 8-86. | A9 Analog Recorder Output Board Assembly Component Locations | 8-136 |
| 8-87. | A9 Analog Recorder Output Board Assembly Schematic Diagram | 8-137 |
| 8-88. | A11 Process Amplifier Board Troubleshooting Flow Diagram -- 1 of 2 | 8-138 |
| 8-89. | A11 Process Amplifier Board Troubleshooting Flow Diagram -- 2 of 2 | 8-139 |
| 8-90. | Basic IF Conversion Mixer | 8-140 |
| 8-91. | Actual IF Conversion Mixer on the A11 Board | 8-141 |
| 8-92. | A11 Process Amplifier Board Assembly Component Locations | 8-144 |
| 8-93. | A11 Process Amplifier Board Assembly Schematic Diagram | 8-145 |
| 8-95. | A12 Modulator Block Diagram | 8-147 |
| 8-96. | A12 Modulator Board Assembly Component Locations | 8-149 |
| 8-97. | A12 Modulator Board Assembly Schematic Diagram | 8-149 |

# SECTION I
# GENERAL INFORMATION

## 1-1. INTRODUCTION

1-2. This operating manual contains the information required to install, operate, and test the Hewlett-Packard Model 4192A LF Impedance Analyzer. Figure 1-1 shows the instrument and supplied accessories. This section covers specifications, instrument identification, description, options, accessories, and other basic information.

1-3. Listed on the title page of this manual is a microfiche part number. This number can be used to order 4 X 6 inch microfilm transparencies of the manual. Each micofiche contains up to 60 photo-duplicates of the manual pages. The microfiche package also includes the latest manual changes supplement as well as all pertinent service notes. To order an additional manual, use the part number listed on the title page of this manual.

## 1-4. DESCRIPTION

1-5. The HP Model 4192A LF Impedance Analyzer is a fully automatic, high performance test instrument designed to measure a wide range of impedance parameters as well as gain, phase, and group delay. The 4192A improves efficiency and quality in the development and production of many types of complex components, semiconductors, and materials. Complete network analysis of devices such as filters, crystals and audio/video equipment, plus evaluation of the impedance characteristics of their circuit components, can be performed. These tests can be performed using test signals equivalent to those found under actual operating conditions. The two measurement display sections, DISPLAY A and DISPLAY B, provide direct readout of the selected meas-

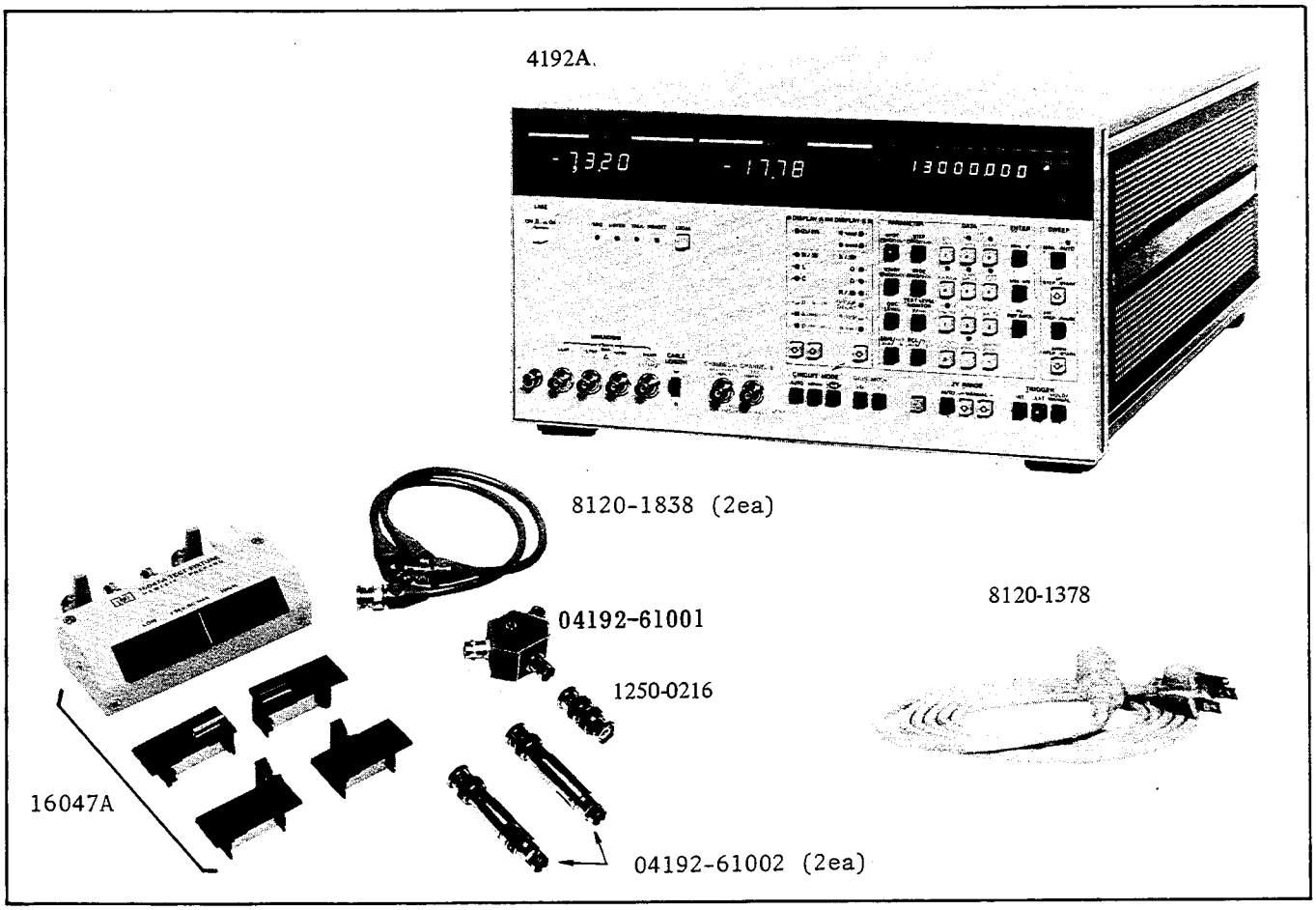


**Figure 1-1. Model 4192A and Accessories**

urement parameters with 4½ digit resolution along with the appropriate units. In NORMAL mode operation, the 4192A performs approximately five measurements per second. The 4192A also provides an AVERAGE measurement mode (approximately one measurement per second) to obtain measurement data of higher resolution and repeatabily than is possible in NORMAL measurement mode, and a HIGH SPEED measurement mode to perform approximately ten measurements per second.

1-6. The 4192A can provide measuring frequency, OSC level, and dc bias voltage (impedance measurements only) equivalent to actual operating conditions. The sweep capability of the built-in frequency synthesizer and dc bias source permits quick and accurate measurements. The built-in frequency synthesizer can be set to measuring frequency within the range from 5.000Hz to 13.00000MHz with 1mHz maximum resolution. OSC level is variable from 5mV to 1.1Vrms with 1mV resolution (5mV for levels higher than 100mV). The internal dc bias voltage source (impedance measurements only) provides ±35V in 10mV increments. Measuring frequency or dc bias voltage can be automatically or manually swept in either direction. OSC level can be manually swept in either direction in 1mV increments (5mV for levels above 100mV). Actual test voltage across- or test signal current through the device under test is also measured. Thus the 4192A can evaluate components and circuits under a wide variety of measurement conditions. For example, video frequency characteristics of a VTR head, dc bias voltage characteristics of a semiconductor or ceramic device, at circuit level as well as component level, can be accurately evaluated. For measurements on high Q ($\approx 10^6$) devices or for impedance measurements that require a test signal that is more stable than that provided by the 4192A, an external frequency synthesizer can be connected to the 4192A EXT VCO input connector. Using this technique, a frequency resolution of 1mHz over the full frequency range, from 5Hz to 13MHz, can be obtained. In addition, a high stability reference (1MHz or 10MHz) can be connected to the 4192A so that even more-stable test signals are obtained.

1-7. In amplitude/phase measurements, the 4192A can measure four transmission parameters – gain/loss (B–A), level (A, B), phase ($\theta$), and group delay. Measurement range of B – A is -100dB to +100dB with 0.001dB maximum resolution and 0.02dB to 0.09dB basic accuracy; measurement range of A/B is +0.8dBV to -100dBV, +13.8dBm to -87dBm with 0.001dB maximum resolution and 0.4dB basic accuracy; measurement range of $\theta$ is $-180° \sim +180°$ with 0.01° resolution and 0.1° to 0.2° basic accuracy; measurement range of group delay is 0.1ns to 19.999s with a resolution of 4½ digits. These features make accurate measurement of transmission characteristics easier than ever before. For example, 0.001dB changes in insertion loss and ripple in the pass band of a BPF (Band Pass Filter), caused by temperature changes, can be resolved. Moreover, the ability of the 4192A to measure group delay helps in the design and construction of filters that must accurately transmit phase information.

1-8. In impedance measurements, the 4192A can measure eleven impedance parameters – absolute value of impedance ($|Z|$), absolute value of admittance ($|Y|$), phase angle ($\theta$), resistance (R), reactance (X), conductance (G), susceptance (B), inductance (L), capacitance (C), dissipation factor (D) and quality factor (Q). Measurement range of $|Z|$ /R/X is 0.1mΩ to 1.2999MΩ. $|Y|$/G/B is 1 ns to 12.999s; $\theta$ is $-180.00°$ to $+180.00°$; L is 0.01mH to 1.000kH; C is 0.1pF to 100.0mF; D is 0.0001 to 19.999; Q is 0.1 to 1999.9. All have a basic accuracy of 0.1% and a resolution of 4½ digits (number of display digits depends on measuring frequency and OSC level setting). Moreover, the unique circuitry of the 4192A provides direct and accurate impedance measurements of both grounded and floated devices.

1-9. The 4192A employs certain functions which make the best use of the intelligence capability of its microprocessor. This microprocessor-based design of the hardware makes operation of the 4192A simple, yet improves performance to realize the accurate measuring capabilities. Desired test parameters are fully programmable through the front-panel control keys or via HP-IB control, a standard capability of the 4192A. The deviation measurement function eliminates the need for tedious deviation calculations. Deviation measurement can be performed on all measuring parameters and is displayed as either the deviation ($\Delta$) from a stored reference value or percent deviation ($\Delta$%). This feature is useful for environmental tests such as temperature characteristics measurement of filter loss, and gain vs. frequency for amplifiers. The self test function augments the high reliability design of the 4192A. Convenient introspective testing is possible by pressing the SELF TEST key and confirms the functional operation of the instrument. The zero offset adjustment function measures the residual impedance and stray admittance inherent to the test fixture used, and offsets the effects of these parasitic parameters to zero with respect to the measured values. The save/recall function can store (SAVE key) five completely different front-panel settings, including both parameter selection and sweep controls, and recall them at any time (RECALL key). This feature

improves efficiency in production applications where repetitive measurements are made. This feature can also be used to measure the same parameter on one component under (five) different sets of test conditions. The standard memory of the 4192A preserves stored data even when the instrument is off.

1-10. The 4192A provides HP-IB interface capability for complete remote control of all front-panel control key settings and test parameter settings. This feature makes it possible to integrate the 4192A into a measurement system which reduces cost by improving DUT throughout, improving circuit design efficiency, and shortening the component development period. The 4192A is also equipped with X-Y recorder outputs and pen lift control. Clear and accurate copies of characteristics curves resulting from swept measurements can be obtained easily with this capability, without an external HP-IB controller.

1-11. The versatility and operability of the 4192A are maximized by the availability of versatile test fixtures. Because components and networks are not of uniform shape and size, the 4192A has several test fixtures that can be used to best meet different measurement requirements.

## 1-12. SPECIFICATIONS

1-13. Complete specifications of the Model 4192A LF Impedance Analyzer are given in Table 1-1. These specifications are the performance standards or limits against which the instrument is tested. The test procedures for the specifications are covered in Section IV, Performance Tests. Table 1-2 lists supplemental performance characteristics. Supplemental performance characteristics are not specifications but are typical characteristics included as additional information for the operator. When the 4192A LF Impedance Analyzer is shipped from the factory, it meets the specifications listed in Table 1-1.

## 1-14. SAFETY CONSIDERATIONS

1-15. The Model 4192A LF Impedance Analyzer has been designed to conform to the safety requirements of an IEC (International Electromechanical Committee) Safety Class I instrument and is shipped from the factory in a safe condition.

1-16. This operating and service manual contains information, cautions, and warnings which must be followed by the user to ensure safe operation and to maintain the instrument in a safe condition.

## 1-17. INSTRUMENTS COVERED BY MANUAL

1-18. Hewlett-Packard uses a two-section nine character serial number which is stamped on the serial number plate (Figure 1-2) attached to the instrument's rear-panel. The first four digits and the letter are the serial prefix and the last five digits are the suffix. The letter placed between the two sections identifies the country where the instrument was manufactured. The prefix is the same for all identical instruments; it changes only when a change is made to the instrument. The suffix, however, is assigned sequentially and is different for each instrument. The contents of this manual apply to instruments with the serial number prefix(es) listed under SERIAL NUMBERS on the title page.

1-19. An instrument manufactured after the printing of this manual may have a serial number prefix that is not listed on the title page. This unlisted serial number prefix indicates the instrument is different from those described in this manual. The manual for this new instrument may be accompanied by a yellow Manual Changes supplement or have a different manual part number. This supplement contains "change information" that explains how to adapt the manual to the newer instrument.

1-20. In addition to change information, the supplement may contain information for correcting errors (called Errata) in the manual. To keep this manual as current and accurate as possible, Hewlett-Packard recommends that you periodically request the latest Manual Changes supplement. The supplement for this manual is identified with this manual's print date and part number, both of which appear on the manual's title page. Complimentary copies of the supplement are available from Hewlett-Packard. If the serial prefix or number of an instrument is lower than that on the title page of this manual, see Section VII, Manual Changes.

1-21. For information concerning a serial number prefix that is not listed on the title page or in the Manual Change supplement, contact the nearest Hewlett-Packard office.

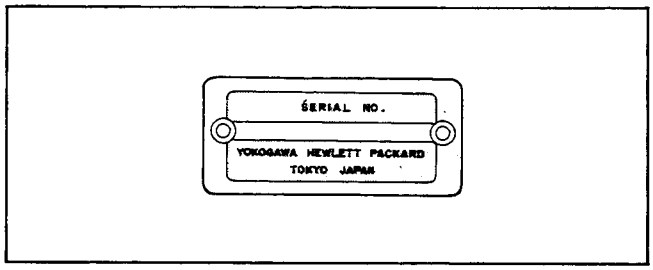


**Figure 1-2. Serial Number Plate**

**Table 1-1. Specifications (Sheet 1 of 12)**

## COMMON SPECIFICATIONS

### (Amplitude-Phase and Impedance Measurements)

**INTERNAL SYNTHESIZER :** Output from OSC OUTPUT ($H_{CUR}$) terminal

**Frequency Range :** 5.000Hz to 13.000000MHz

**Frequency Resolution :** 1mHz (5Hz to 10kHz), 10mHz (10kHz to 100kHz), 100mHz (100kHz to 1MHz), 1Hz (1MHz to 13MHz)

**Frequency Accuracy :** ± 50 ppm (23°C ± 5°C)

**OSC Level Range :** Variable from 5mVrms to 1.1Vrms (when terminated by 50Ω in amplitude-phase measurements or UNKNOWN terminals are open in impedance measurements).

**OSC Level Resolution :** 1mV (5mV to 100mV), 5mV (100mV to 1.1V)

**OSC Level Accuracy :**

| Measuring Frequency | OSC Level | |
|---|---|---|
| | ≤ 100mV | > 100mV |
| 5Hz ~ 1MHz | (5 + 10/f) % + 2mV | (5 + 10/f) % + 10mV |
| 1MHz ~ 13MHz | (4 + 1.5F) % + 2mV | (4 + 1.5F) % + 10mV |
| f : measuring frequency (Hz), F : measuring frequency (MHz). | | |

**Output Resistance :** 50Ω (amplitude/phase measurements),100Ω (impedance measurements, ≥ 38kHz) 100Ω to 10kΩ (impedance measurements, < 38kHz, depends on measuring range), dc coupling.

**Level Monitor (impedance measurement) :** Measures and displays the voltage across- or current through the device under test.

**Frequency and Level Control :** Set via the front-panel numeric keys or HP-IB; auto sweep (except for level) or manual sweep.

**EXTERNAL SYNTHESIZER :** Connected to the VCO INPUT connector on the rear-panel (HP3325A Synthesizer or equivalent is recommended).

**Frequency Range :** 40.000005MHz to 53MHz (measuring frequency is equal to the frequency of the external synthesizer minus 40MHz [5Hz to 13MHz]).

**Required Signal Level :** 0dBm to 3dBm

*Note: Frequency of the 4192A internal synthesizer should be set to the frequency of the external synthesizer minus 40MHz, and the internal and external synthesizers should be phase-locked.*

**Table 1-1. Specifications (Sheet 2 of 12)**

| | |
|---|---|
| **EXT REFERENCE INPUT CONNECTOR** : | Can be connected to a 1MHz/10MHz high stability reference signal (−1dBm to +5dBm) to improve the stability of the internal synthesizer. |
| **Input Resistance** : | Approximately 50Ω |
| **MEASURING MODE** : | |
| **Spot Measurement** : | At specific frequency (or dc bias*) |
| **Swept Measurement** : | Between START and STOP frequencies (or dc bias*). Sweep can be automatic or manual. |
| **Sweep Mode** : | Linear sweep mode (sweeps at specified step) and logarithmic sweep mode (20 measurement points per frequency decade). |
| **X10 STEP** : | Multiplies the specified frequency/dc bias* step by 10 in linear manual sweeps. |
| **PAUSE Key** : | Temporarily stops swept measurements. |
| **SWEEP ABORT Key** : | Makes sweep cancellation. |
| * : DC bias sweeps can be made for impedance measurements only. | |
| **RECORDER OUTPUT** : | DC outputs proportional to measured values of DISPLAY A, DISPLAY B, and measuring frequency or dc bias. PEN LIFT output and X-Y recorder scaling outputs are provided. |
| **Maximum Output** : | ±1V |
| **Output Voltage Accuracy** : | ± (0.5% of output voltage + 20mV). |
| **FIVE NONVOLATILE STORAGE REGISTERS** : | Memorize five complete instrument measurement configurations. Measurement configurations can be set from the front-panel, from the HP-IB, or both. |
| **HP-IB INTERFACE** : | Data output and remote control via the HP-IB (based on IEEE-Std-488 and ANSI-MC1·1. |
| **Interface Capability** : | SH1, AH1, T5, L4, SR1, RL1, DC1, DT1. |
| **Remote Control Function** : | All front-panel functions except LINE ON/OFF switch and X10 STEP key. |
| **Data Output** : | Measured values of DISPLAY A, DISPLAY B, and measuring frequency or dc bias. |
| **SELF TEST** : | Performs the 4192A basic operation checks and displays the test results when power is turned on or when the SELF TEST mode is set by the SELF TEST key or via HP-IB. |
| **TRIGGER** : | Internal, External, Hold/Manual, or HP-IB remote control. |

**Table 1-1. Specifications (Sheet 3 of 12)**

## AMPLITUDE/PHASE MEASUREMENTS

**PARAMETERS MEASURED :** Measures DISPLAY A parameters and DISPLAY B parameters simultaneously in the parameter combination listed below. Deviation measurement (Δ) and percent deviation measurement (Δ%) can be performed for all measurement parameters.

| DISPLAY A Function | DISPLAY B Function |
|---|---|
| B – A (dB) : Amplitude ratio | Group delay (s) |
| | $\theta$ (deg/rad) : Phase Difference |
| A (dBm/dBV) : Absolute amplitude of Reference Input | |
| B (dBm/dBV) : Absolute amplitude of Test Input | |

**REFERENCE AMPLITUDE :** 0dBv = 1Vrms, 0dBm = 1mW (into 50Ω)

**OSC OUTPUT CONNECTOR OUTPUT IMPEDANCE :** 50Ω + 5% - 8% (at 50Hz to 5MHz), 50Ω ± 10% (at 5Hz to 13MHz).

**CHANNEL A AND B :**

**Input Impedance :** 1MΩ ± 2%, shunt capacitance 25pF ± 5pF

**Maximum Input Voltage :** 2Vrms/±35V DC Max.

**DISPLAY RANGE AND RESOLUTION :** In NORMAL or AVERAGE measurement mode (Measuring resolution decreases one digit in HIGH SPEED measurement mode.

**B – A :** 0 to ± 100dB, 0.001dB (0 ~ 20dB), 0.01dB (20 ~ 100dB) resolution

**$\theta$ :** 0 to ±180° (0 to ± π radian), 0.01° resolution

**Group Delay ($\tau_g$) :** 0.1ns to 19.999s, 0.1ns maximum resolution

**A, B :** +0.8dBV to -100dBV, +13.8dBm to -87dBm, 0.001dB (> -20dB), 0.01dB (≦ -20dB) resolution

**Table 1-1. Specifications (Sheet 4 of 12)**

**MEASURING ACCURACY** : Specified at measuring terminals when the following conditions are satisfied:

**(1) Warmup Time** : > 30 minutes

**(2) Ambient Temperature** : 23°C ± 5°C (error limits double for 0°C to 55°C temperature range).

**(3) Measuring Speed** : NORMAL or AVERAGE mode.

*Note: Additional errors due to the power splitter, feedthrough termination, etc., are to be added to specifications given here.*

The measurement accuracy of each parameter is given below. The accuracy depends on input absolute level of each channel and the measuring frequency.

**B–A and $\theta$ Measurements Accuracies** : Accuracies are the sum of each channel accuracy given in the table below. For example, when the frequency is 1 kHz, A channel is −15 dBV and B channel is −25 dBV; the uncertainty contributed by each channel to the B–A error is 0.01 dB/0.05° and 0.05 dB/0.15°, respectively. Therefore, the final accuracy of 0.06 dB/0.2° is given by the accuracy of both channels.

**Group Delay Measurements Accuracy** : Accuracy is derived from the following equation (phase accuracy $\Delta\theta_A$ and $\Delta\theta_B$ are read from the table below):

$$\text{group delay accuracy} = \frac{\Delta\theta_A + \Delta\theta_B}{720 \times \Delta F} \text{ (s)}$$

where, $\Delta\theta_A$ : Channel A phase accuracy (degree)
$\Delta\theta_B$ : Channel B phase accuracy (degree)
$\Delta F$ : Step Frequency (Hz)

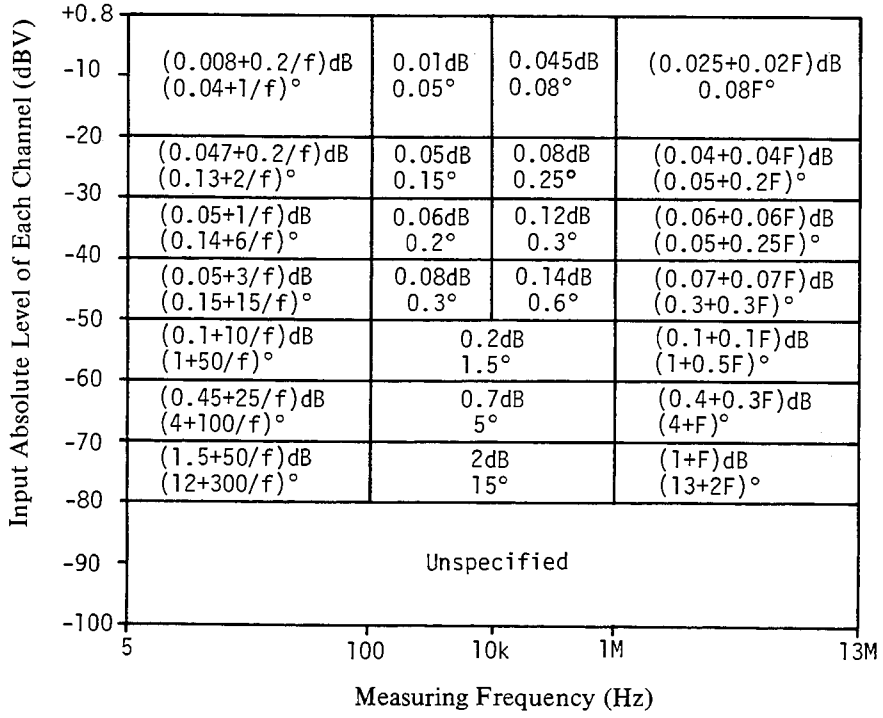


f : measuring frequency (Hz)

F : measuring frequency (MHz)

Equations in table represent:

| |
|---|
| A, B accuracy |
| $\theta$ accuracy |

**Note**

When calculating accuracy for points along a horizontal or vertical line, or at the intersection of two lines, use the narrowest accuracy equation.

**Table 1-1. Specifications (Sheet 5 of 12)**

**Absolute Amplitude (A, B) Accuracy** : Accuracy is given in the table below.

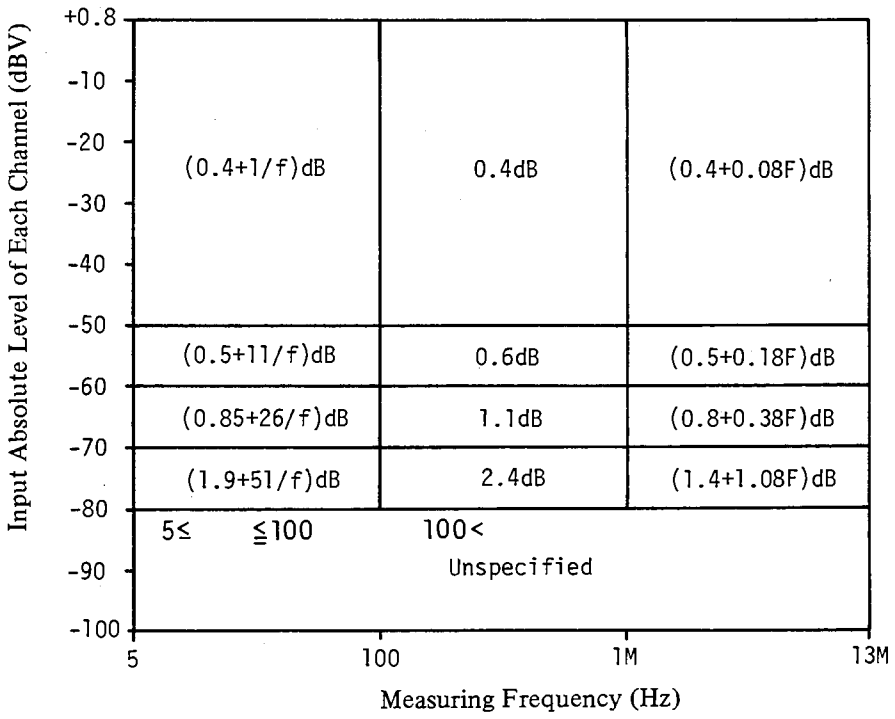


f : measuring frequency (Hz)

F : measuring frequency (MHz)

Note

When calculating accuracy for points along a horizontal or vertical line, or at the intersection of two lines, use the narrowest accuracy equation.

**Table 1-1. Specifications (Sheet 6 of 12)**

## IMPEDANCE MEASUREMENTS

**PARAMETERS MEASURED :** Measures DISPLAY A parameters and DISPLAY B parameters simultaneously in the parameter combinations listed below. Deviation measurement (Δ) and percent deviation measurement (Δ%) can be performed for all measurement parameters.

| DISPLAY A Function | DISPLAY B Function |
|---|---|
| \|Z\| : Absolute Value of Impedance | θ (deg/rad) : Phase Angle |
| \|Y\| : Absolute Value of Admittance | |
| R : Resistance | X : Reactance |
| G : Conductance | B : Susceptance |
| L : Inductance<br>C : Capacitance | Q : Quality Factor |
| | D : Dissipation Factor |
| | R : Resistance |
| | G : Conductance |

**EQUIVALENT CIRCUIT MODE :** Auto, 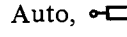 (Series), and 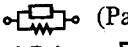 (Parallel). |Z|, R, and X are measured in 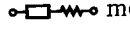 mode; and |Y|, G, and B in  mode.

**DISPLAY :** Maximum 4·1/2 digits in NORMAL or AVERAGE measurement mode, maximum 3·1/2 digits in HIGH SPEED measurement mode; 19999 full-scale display for L and C measurement, 12999 for other parameters. Number of display digits depends on OSC level, measurement range, and test frequency. (Refer to Para. 3-17)

**RANGING :** AUTO or MANUAL for impedance (|Z|)/admittance (|Y|) measured value.

**MEASUREMENT TERMINAL :** 4-terminal pair configuration

**AUTOMATIC ZERO ADJUSTMENT :** Residual impedance (R + jX) and stray admittance (G + jB) of the test fixture are measured at a frequency selected by the operator. These values are then stored and used as offset data for subsequent measurements. The stored offset values are converted and applied to other measurement frequencies (refer to paragraph 3-79).

**Table 1-1. Specifications (Sheet 7 of 12)**

**MEASURING RANGE AND RESOLUTION** : Accuracy is specified at UNKNOWN terminals under the following conditions:

**(1) Warmup Time** : ≧ 30 minutes

**(2) In Floating Measurements** : (see Table 1-2 for specifics on low-grounded measurements)

**(3) Measuring Frequency** : At the frequency of the zero offset adjustment

**(4) Ambient Temperature** : 23°C ± 5°C (error limits double for temperature range of 0°C to 55°C)

**(5) CABLE LENGTH** : At 0 position

**(6) Measuring Speed** : NORMAL or AVERAGE mode

**(7) In the tables,** ▒ **area** : Reference data (accuracy is not guaranteed.)

▨ area : When calculating the accuracy of measurements made at 400Hz, 1MHz, and 2MHz, use the accuracy equation listed to the left of the frequency division line.

$B = 1 + \frac{0.02}{\gamma}$ : use the left graph (below)

$C = \frac{1}{\gamma}$ : use the right graph (below)

where $\gamma$ : OSC LEVEL (V)

f : Measuring frequency (Hz)

F : Measuring frequency (MHz)

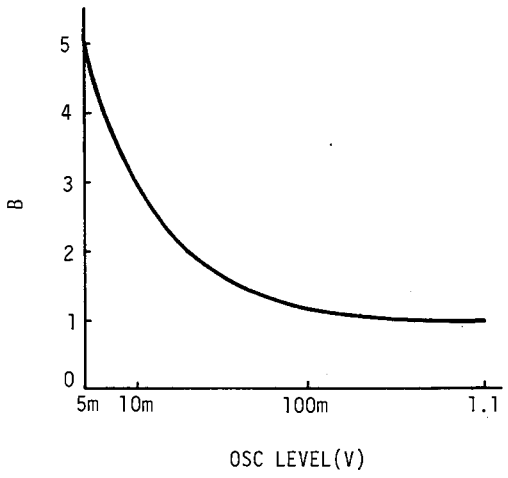


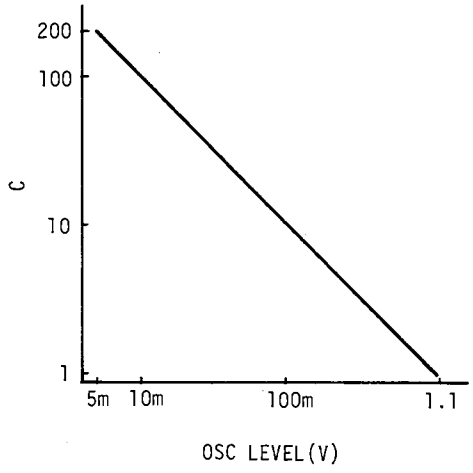

**Table 1-1. Specifications (Sheet 8 of 12)**

**|Z|–θ and R–X Measurements :**

**Measuring Range :**

| Parameter | Measuring Range | Maximum Resolution |
|---|---|---|
| \|Z\| · R · X | 0.0001Ω to 1.2999MΩ | 100μΩ |
| θ | −180.00° to +180.00° | 0.01° |

**Measurement Accuracy :** Refer to the table below (specified by ZY RANGE). However, R and X accuracy depends on the value of D as follows:

| | D < 1 | 1 ≦ D < 10 | 10 ≦ D |
|---|---|---|---|
| R | Accuracy of R is equal to the accuracy of X, in number of counts, as calculated from the table below. | Two times % error given in the table below. | Table below |
| X | Table below. | Accuracy of X is equal to the accuracy of R, in number of counts, as calculated from the table below. | |

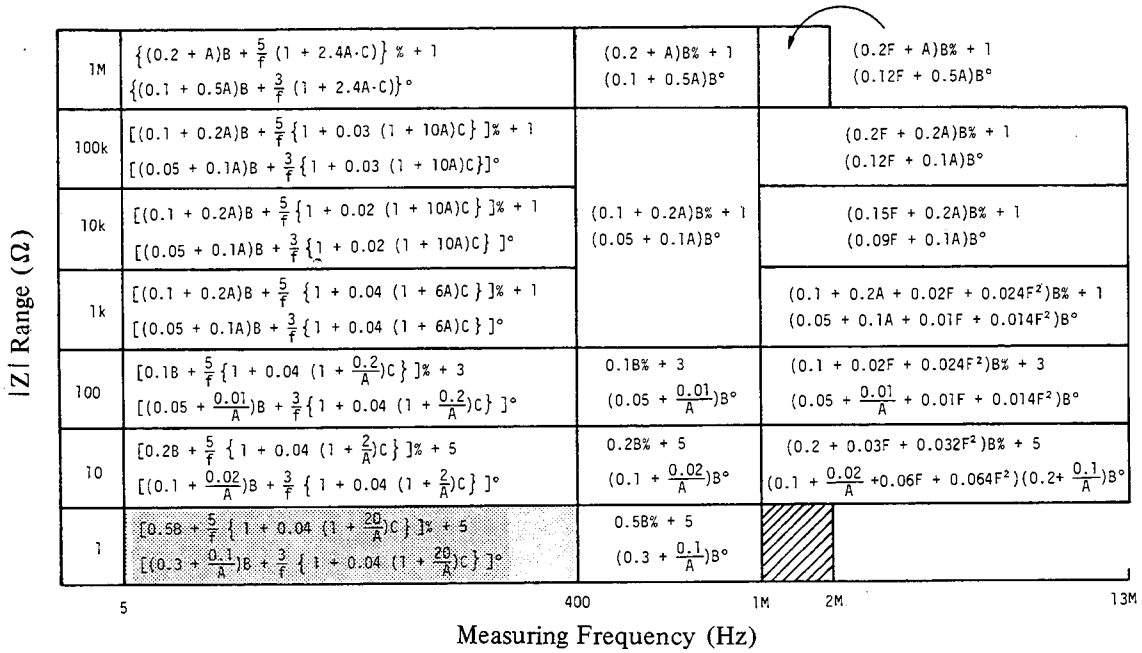


(1) $A = \dfrac{\text{Displayed } |Z|, R \text{ or } X\ (\Omega)}{|Z| \text{ Range full scale } (\Omega)}$ in the table.

(2) Equations in table represent :

|Z|, R, X accuracy [± (% of reading + number of counts)]
θ accuracy [± (absolute value)]

**Table 1-1. Specifications (Sheet 9 of 12)**

|Y| — $\theta$ and G—B Measurements :

**Measuring Range :**

| Parameter | Measuring Range | Maximum Resolution |
|---|---|---|
| \|Y\|, G, B | 0.001$\mu$S ~ 12.999S | 1nS |
| $\theta$ | -180.00° ~ +180.00° | 0.01° |

**Measurement Accuracy :** Refer to the table below (specified by ZY RANGE). However, G and B accuracy depends on the value of D as follows:

| | D ≦ 0.1 | 0.1 < D ≦ 1 | 1 < D |
|---|---|---|---|
| G | Accuracy of G is equal to the accuracy of B, in number of counts, as calculated from the table below. | | Table below |
| B | Table below | Two times % error given in the table below. | Accuracy of B is equal to the accuracy of G, in number of counts, as calculated from the table below. |

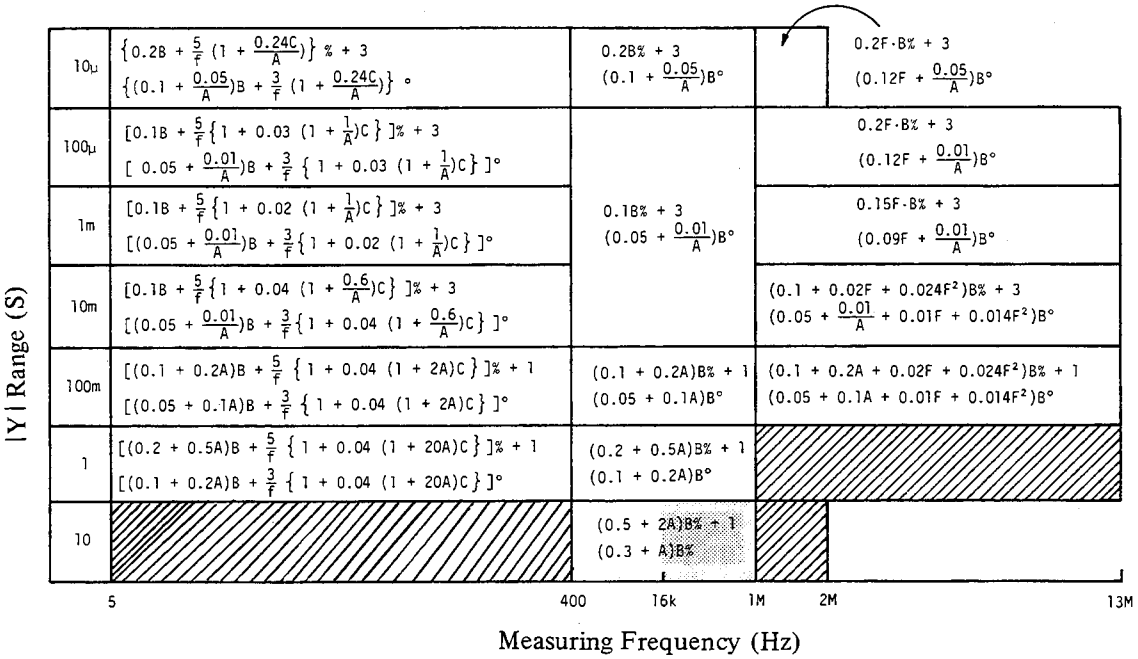


(1) $A = \frac{\text{Displayed |Y|, G or B (S)}}{\text{|Y| Range full scale (S)}}$ in the table.

(2) Equations in table represent :

|Y|, G, B accuracy:[ ± (% of reading + number of counts)]
$\theta$ accuracy:[ ± (absolute value)]

**Table 1-1. Specifications (Sheet 10 of 12)**

**L–Q, D, R, G Measurements :** Refer to R/X or G/B measurements for R and G accuracy.

**Measuring Range :**

| Parameter | Measuring Range | Maximum Resolution |
|---|---|---|
| L* | 0.01nH ~ 1.0000kH | 10pH |
| D | 0.0001 ~ 19.999 | 0.0001 |
| Q | 0.1 ~ 1999.9 | 0.1 |
| * : Depends on ZY RANGE and measuring frequency (refer to paragraph 3-71). | | |

**Measuring Accuracy :** Refer to the table below (specified by ZY RANGE).
To determine which |Z| range is selected for L measurements, change the DISPLAY A function to |Z|/|Y|.

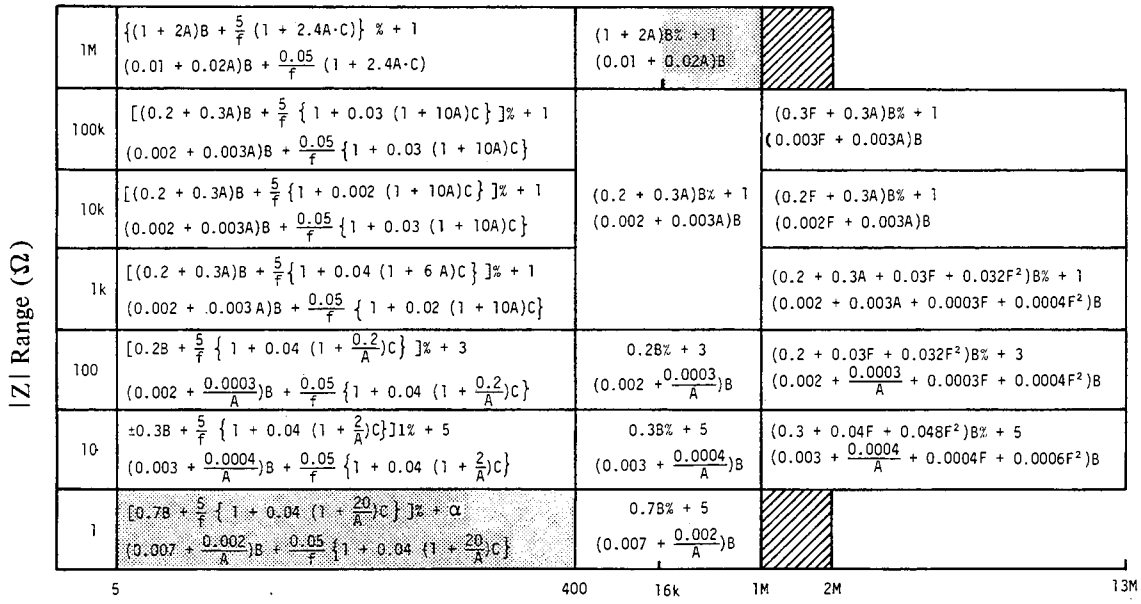


(1) $A = \dfrac{2\pi \times \text{Measuring frequency (Hz)} \times \text{Displayed L (H)}}{|Z| \text{ Range full scale } (\Omega)}$ in the table.

(2) Equations in table represent (at $D \leqq 0.1$) :

> L accuracy:[± (% of reading + number of counts)]
> D accuracy:[± (absolute value)]

(3) If $0.1 < D \leqq 1$, double the % error for all values of L.

(4) If $D > 0.1$, multiply error of D by $(1 + D)^2$.

(5) $\alpha = \dfrac{5}{2\pi f \times 10^{\beta}}$ (H) in the table.

Where $\beta$ : number of digits displayed when the DISPLAY A function is changed to |Z|/|Y|.

**Table 1-1. Specifications (Sheet 11 of 12)**

**C–Q, D, R, G Measurments :** Refer to R/X or G/B measurements for R and G accuracy.

**Measuring Range :**

| Parameter | Measurement Range | Maximum Resolution |
|---|---|---|
| C* | 0.0001pF ~ 100.00mF | 0.1fF |
| D | 0.0001 ~ 19.999 | 0.0001 |
| Q | 0.1 ~ 1999.9 | 0.1 |
| * : Depends on ZY RANGE and measuring frequency (refer to paragraph 3-71). | | |

**Measurement Accuracy :** Refer to the table below (specified by ZY RANGE).
To determine which |Y| range is selected for C measurements, change the DISPLAY A function to |Z|/|Y|.

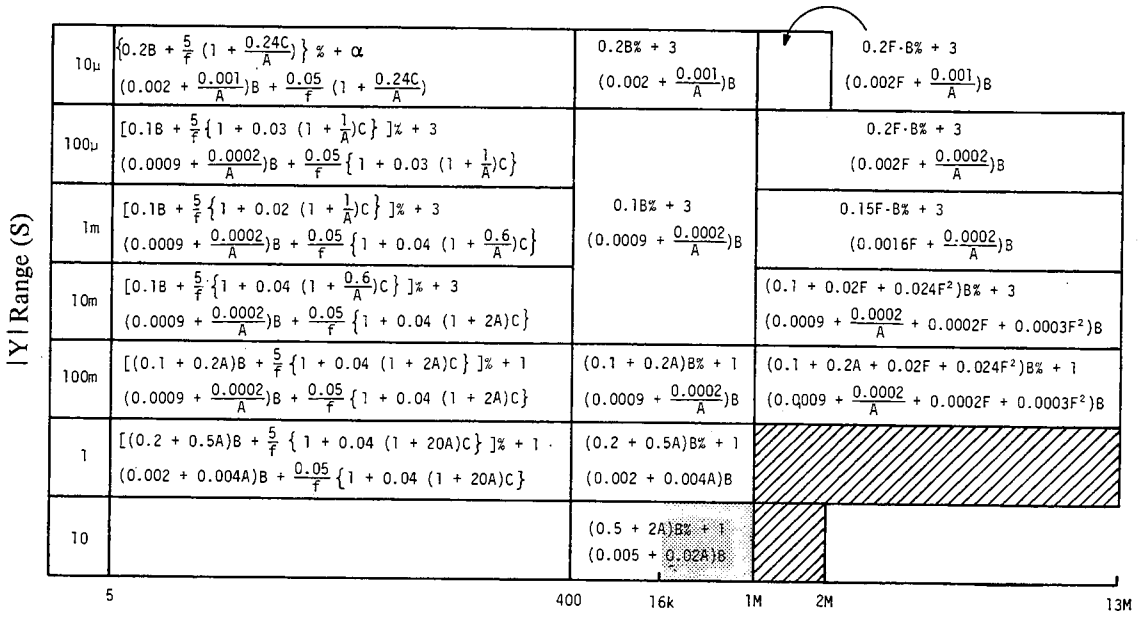


(1) $A = \dfrac{2\pi \times \text{Measuring frequency (Hz)} \times \text{Displayed C (F)}}{|Y| \text{ Range full scale}}$

(2) Equations in table represent (at $D \leqq 0.1$) :

> C accuracy:[± (% of reading + number of counts)]
> D accuracy:[± (absolute value)]

(3) If $0.1 < D \leqq 1$, double the % error for all values of C.

(4) If $D > 0.1$, multiply error of D by $(1 + D)^2$.

(5) $\alpha = \dfrac{3}{2\pi f \times 10^{\beta+5}}$ (F) in the table.

Where $\beta$ : number of digits displayed when the DISPLAY A function is changed to |Z|/|Y|.

**Table 1-1. Specifications (Sheet 12 of 12)**

**DC BIAS :** Valid for impedance measurements only.

**Voltage Range :** −35V to +35V, 10mV steps

**Setting Accuracy (at 23°C ± 5°C) :** ± (0.5% of setting +5mV)

**Output Resistance :** 110Ω to 11kΩ ± 10% (depends on measuring range)

**Maximum Output Current :** Varies with measuring frequency and range.

Floating measurements — 20mA max.
Low-grounded measurements — 5mA max.

**Control :** Front-panel numeric keys or HP-IB remote control

## GENERAL

**OPERATING TEMPERATURE :** 0°C to 55°C

**RELATIVE HUMIDITY :** ≤95% at 40°C

**POWER :** 100, 120, 220V ± 10%, 240V + 5% - 10%, 48Hz to 66Hz, power consumption 150VA maximum.

**DIMENSIONS :** 425.5mm (W) X 235mm (H) X 615mm (D)

**WEIGHT :** Approximately 19kg

**FURNISHED ACCESSORIES AND PARTS :**
16047A Test Fixture, 50Ω Feedthrough Termination (HP Part No.:04192-61002, 2ea.), Splitter (HP Part No.:04192-61001, Nominal 50Ω), Power Cord (HP Part No.:8120-1378).

## OPTIONS

**OPTION 907 :** Front Handle Kit (HP Part No.: 5061-0091)

**OPTION 908 :** Rack Flange Kit (HP Part No.: 5061-0079)

**OPTION 909 :** Rack and Handle Kit (HP Part No.: 5061-0085)

**OPTION 910 :** Extra Manual

**Table 1-2. General Information (Sheet 1 of 2)**

## GENERAL INFORMATION

**(The following information is reference data and not guaranteed specifications.)**

### TYPICAL MEASUREMENT ACCURACY :

**Impedance Measurement (Floating) :**

Accuracy when CABLE LENGTH is 1 m : 2.5 times percent error for frequencies above 1 MHz.

L · C accuracy for $D > 1$ : $(1 + D^2)$ times accuracy specifications

Low Grounded Impedance Measurement Accuracy :

To obtain low grounded measurement accuracy, add the accuracy for floating impedance measurements, given in the proceding tables, to the additional error given in the figure below. Compensation for residual impedance ($\leqq$ 9pF at $\leqq$ 600kHz or approximately 20kΩ at $\geqq$ 600kHz) must also be made using the 4192A's zero offset adjustment function.

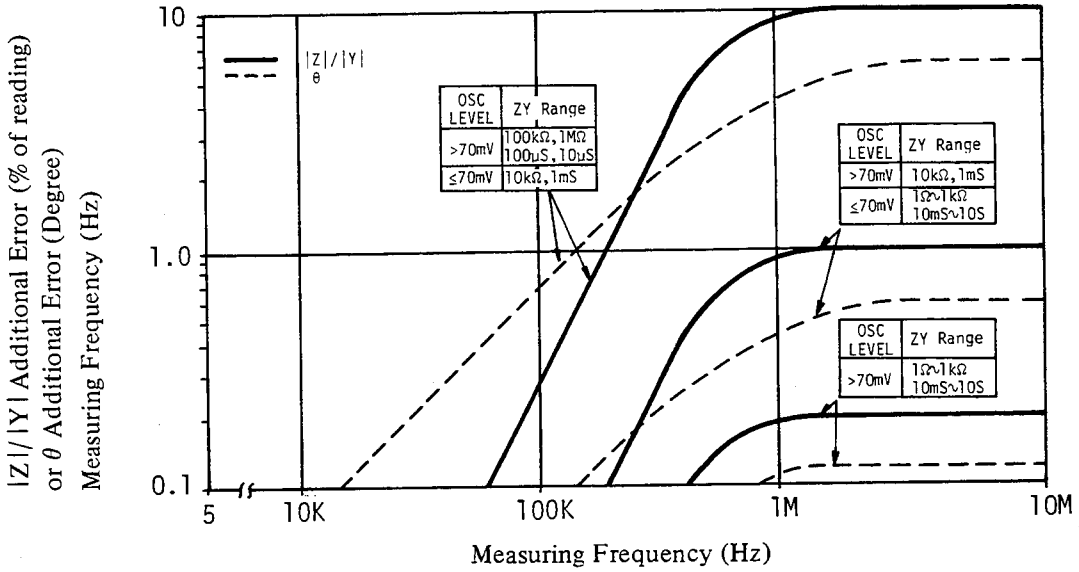


### MEASURING SPEED :

Refer to the figure below (at fixed measuring frequency, measurement range and OSC level for impedance measurement). Specific information is provided in paragraph 3-55 for amplitude/phase measurements and in paragraph 3-89 for impedance measurements. Speed in AVERAGE mode is approximately 7 times that for NORMAL mode.

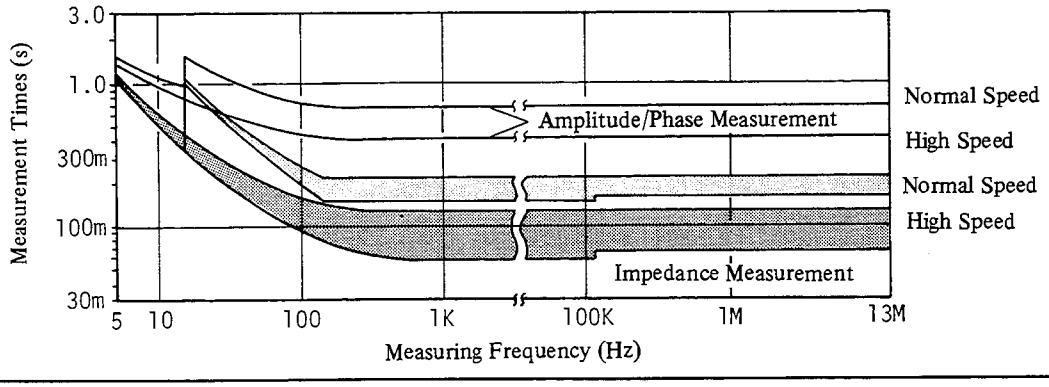

**Table 1-2. General Information (Sheet 2 of 2)**

**FREQUENCY SWITCHING TIME :** Approximately 50ms to 65ms

**ZY RANGE SWITCHING TIME :** Approximately 35ms to 50ms per range (at > 400Hz)

**OSC LEVEL SWITCHING TIME :** Approximately 65ms

**DC BIAS VOLTAGE SETTLING TIME :** Approximately (0.4 X ΔV + 10) ms where ΔV is the voltage change (V).

**LEVEL MONITOR RANGE AND ACCURACY :** At 23°C ± 5°C

| | Range | Accuracy (% of reading + count) |
|---|---|---|
| Voltage | 5mV ~ 1.1V | ≦ 100Hz : (4 + 10/f) % + 1<br>100Hz to 1MHz : 4% + 1<br>≧ 1MHz : (4 + 0.8F) % + 1 |
| Current | 1μA ~ 11mA | |
| where f : measuring frequency (Hz), F : measuring frequency (MHz). | | |

**TIME REQUIRED FOR LEVEL MONITOR :** Approximately 120ms

**1MHz REFERENCE OUTPUT :** Square wave, ≧ 1.6Vp-p

**Output Resistance :** Approximately 50Ω

## 1-22. OPTIONS

1-23. Options are modifications to the standard instrument that implement the user's special requirements for minor functional changes. The 4192A has four options as listed in Table 1-3.

**Table 1-3. Available Options**

| Option Number | Description |
|---|---|
| 907 | Front Handle Kit. |
| 908 | Rack Flange Kit. |
| 909 | Rack Flange and Front Handle Kit. |
| 910 | Extra Manual |

1-24. The following options provide the mechanical parts necessary for rack mounting and hand carrying:

Option 907: Front Handle Kit. Furnishes carrying handles for both ends of front-panel.

Option 908: Rack Flange Kit. Furnishes flanges for rack mounting for both ends of front-panel.

Option 909: Rack Flange and Front Handle Kit. Furnishes both front handles and rack flanges for instrument.

Installation procedures for these options are detailed in Section II.

1-25. Option 910 adds an extra copy of the Operation and Service Manual.

## 1-26. ACCESSORIES SUPPLIED

1-27. The HP Model 4192A LF Impedance Analyzer, along with its furnished accessories, is shown in Figure 1-1. The furnished accessories are also listed below.

16047A Test Fixture
50Ω Feedthrough (HP Part No.:04192-61002, 2ea.)
Power Splitter (HP Part No.: 04192-61001)
BNC Adapter (HP Part No.: 1250-0216)
BNC Cable (HP Part No.:8120-1838, 2ea.)
Power Cable (HP Part No.: 8120-1378)
Additional Fuses for A1F1 (2ea. PN: 2110-0650)

## 1-28. ACCESSORIES AVAILABLE

1-29. For certain measurements and for convenience in connecting samples, ten types of accessories are available. Each accessory is designed to meet the various measurement requirements and types of DUT. All accessories were developed with careful consideration to accuracy, reliability, and ease of measurement. A brief description and photo of each available accessory is given in Table 1-4.

**Table 1-4. Accessories Available (Sheet 1 of 4)**

| Model | Description |
|---|---|
| **HP 16047A**<br> 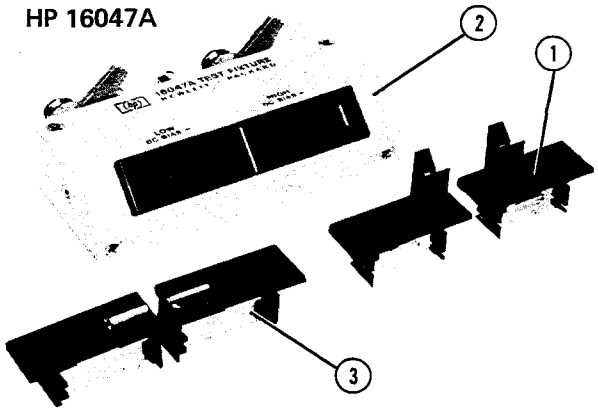 | **16047A Direct Coupled Test Fixture (furnished):**<br>Test Fixture (direct attachment type) for general measurement of both axial and radial lead components. Three kinds of contact inserts are furnished:<br>① For axial lead components, (HP P/N 16061-70022).<br>② For general radial lead components, (HP P/N 16061-70021).<br>③ For radial short lead components, (HP P/N 16047-65001).<br>DC bias up to ±35V can be applied. |
| **HP 16047B**<br> 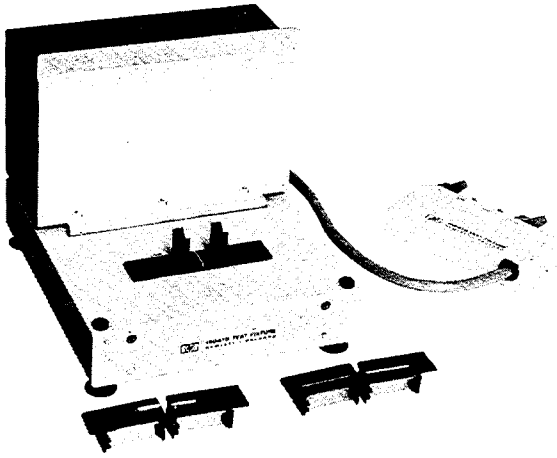 | **16047B Test Fixture with Safe Guard:**<br>Test Fixture (cable connection type) for general measurement of both axial and radial lead components at frequencies below 2MHz. Three kinds of contact inserts are furnished (same as those for the 16047A Test Fixture).<br>DC bias up to ±35V can be applied with using the 4192A (a protective cover provides for operator safety).<br>Cable length: approximately 40cm |
| **HP 16047C**<br> 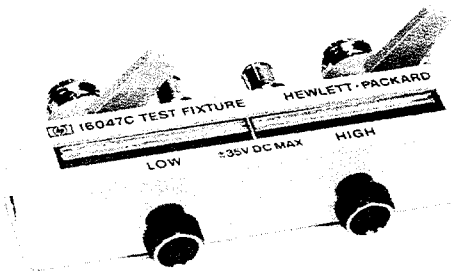 | **16047C High Frequency Test Fixture:**<br>Test Fixture (direct attachment type) especially appropriate for high frequency measurements requiring high accuracy. Two screw knobs facilitate and ensure optimum contact of electrodes and sample leads. Maximum applied dc bias voltage is ±35V. |

**Table 1-4. Accessories Available (Sheet 2 of 4)**

| Model | Description |
|---|---|
| **HP 16048A** 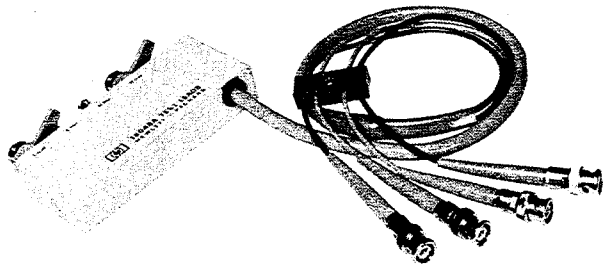 | **16048A Test Leads with BNC Connector:**<br>Test Leads (four terminal pair) with BNC connectors for connecting user-fabricated test fixtures.<br><br>Maximum applied dc bias voltage is ±200V (refer to Figure 3-34).<br>Cable length: 1m |
| **HP 16048B** 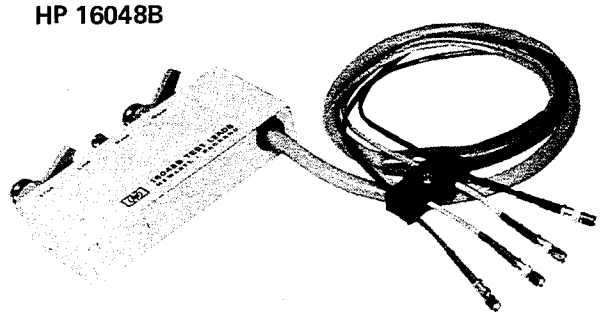 | **16048B Test Leads with RF Miniature Connectors:**<br>Test Lead (four terminal pair) with miniature RF connectors suitable for connecting user-fabricated test fixtures in systems applications.<br><br>Maximum applied dc bias voltage is ±200V (refer to Figure 3-34).<br>Cable length: 1m |
| **HP 16048C** 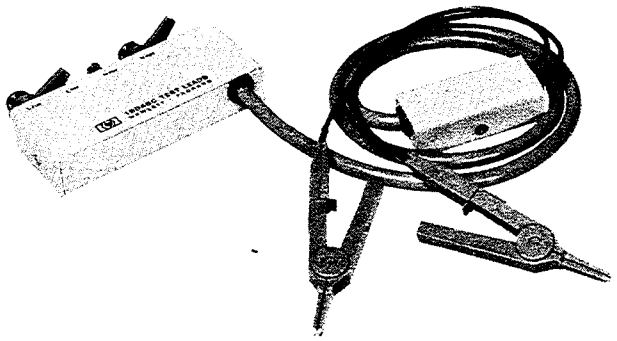 | **16048C Test Leads with Alligator Clips:**<br>Test Leads with dual alligator clips for testing components of various shapes and sizes at frequencies below 100kHz. Applicable measurement ranges:<br><br>Capacitance > 1000pF<br>Inductance > 100μH<br><br>Maximum applied dc bias voltage is ±35V.<br>Cable length: 1m |
| **HP 16034B** 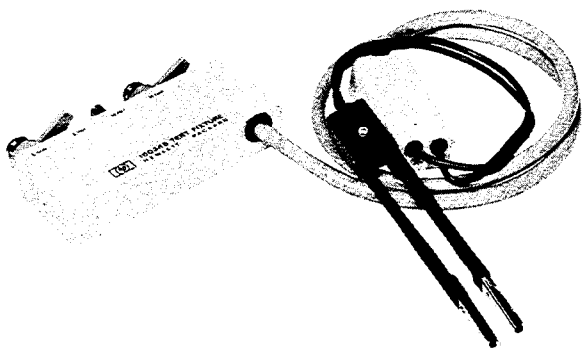 | **16034B Test Fixture for Chip Components:**<br>Test Fixture (tweezer type) for measurement of miniature, leadless components such as chip capacitors. Employs a three terminal configuration tweezer probe suitable for high impedance component measurements (above 50Ω).<br><br>Maximum applied dc bias voltage is ±35V.<br>Cable length: 1m |

**Table 1-4. Accessories Available (Sheet 3 of 4)**

| Model | Description |
|---|---|
| **HP 16095A**<br> 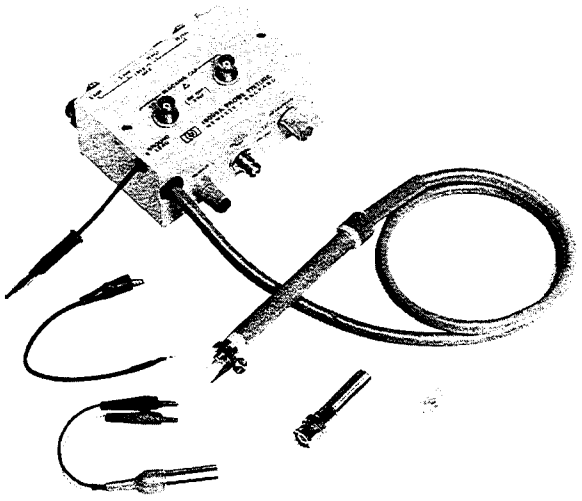 | **HP 16095A Probe Fixture:**<br>For probe impedance measurements on board-mounted components or entire circuits. Low lead can be floated or grounded. OSC OUTPUT connector is provided for amplitude-phase measurements. Following data is specified when BNC adapter is used:<br>Stray capacitance : ≦ 15pF<br>Residual inductance : ≦ 40nH<br>Residual resistance : ≦ 100mΩ<br>Following parts are furnished.<br>**Part** / **HP Part No.**<br>Center pins for probe (10 ea.) — 16095-60012<br>Alligator clip for ground — 16095-61611<br>BNC (male) adapter — 16095-60011<br>Alligator clip adapter — 16095-61612<br>Ground pins (5 ea., HP Part No. 16095-65001) are also available (not furnished). |
| **16097A**<br> 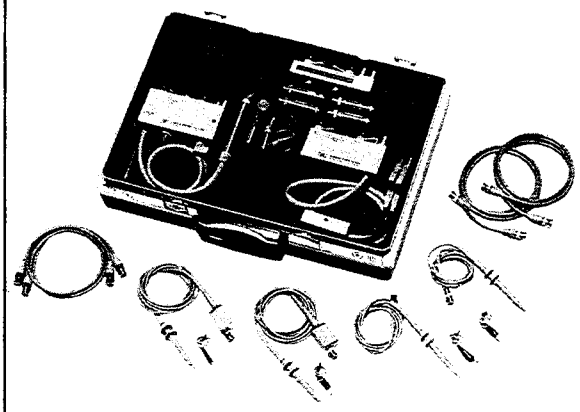 | **16097A Accessory Kit (with carrying case):**<br>Contains the following accessories for circuit measurements:<br>11094B 75Ω Feedthrough (2 ea.)<br>11095A 600Ω Feedthrough (2 ea.)<br>PN 8120-1839 60cm BNC cable (2 ea.)<br>PN 8120-1840 120cm BNC cable (2 ea.)<br>10006D 10 : 1 Scope probe (2 ea.)<br>10007B 1 : 1 Scope probe (2 ea.)<br>16047C Test Fixture<br>16048C Test Leads<br>16095A Probe Fixture |

**Table 1-4. Accessories Available (Sheet 4 of 4)**

| Model | Description |
|---|---|
| **16096A**<br> 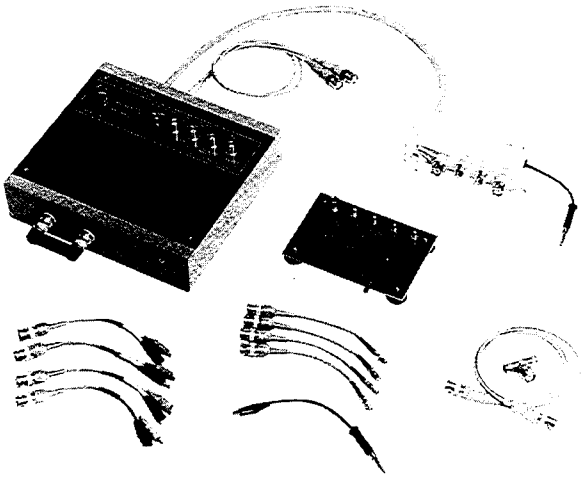 | **16096A Test Fixture:**<br>To alternately make amplitude/phase measurements and input impedance measurements on two-port devices. Following data is specified at BNC connectors:<br><br>Residual Impedances (after zero offset adjustment):<br>Stray capacitance : $\leqq$ 0.01pF<br>Residual Inductance: $\leqq (100 + 0.5F^2)$ nH<br>Residual resistance : $\leqq (50 + 5F^2)$ m$\Omega$<br><br>Error in amplitude/phase measurements (after cable compensation):<br>B–A error : ±0.1 dB<br>Phase error : ±0.1°<br>A, B error : $\pm (0.1 + 0.06F^2)$ dB<br><br>Input impedance of CHANNEL A/B : 1M$\Omega$ shunted by less than 15pF.<br><br>Following parts are furnished: |

| Part | HP Part No. |
|---|---|
| Textool® Grid zip test socket kit | 16096-65001 |
| BNC (male) to dual alligator clip cable | 16096-61614 (4 ea.) |
| BNC (male) to SMC cable | 16096-61611 (4 ea.) |
| Banana plug to alligator clip cable | 16096-61613 |
| BNC (male) – BNC (male) cable (90 cm) | 16096-61615 |
| BNC T adapter | 1250-0781 |

# SECTION II
# INSTALLATION

## 2-1. INTRODUCTION

2-2. This section provides installation instructions for the Model 4192A Impedance Analyzer. The section also includes information on initial inspection and damage claims, preparation for using the 4192A, packaging, storage, and shipment.

## 2-3. INITIAL INSPECTION

2-4. The 4192A Impedance Analyzer, as shipped from the factory, meets all the specifications listed in Table 1-1. Upon receipt, inspect the shipping container for damage. If the shipping container or cushioning material is damaged, it should be kept until the contents of the shipment have been checked for completeness and the instrument has been checked mechanically and electrically. The contents of the shipment should be as shown in Figure 1-1. The procedures for checking electrical performance are given in Section III, paragraph 3-7, Self Test and in Section IV, Performance Tests. If the shipment is incomplete, if the instrument is damaged in any way, or if the instrument does not pass the Performance Tests, notify the nearest Hewlett-Packard office. If the shipping container is damaged, notify the carrier as well as Hewlett-Packard. Keep the shipping materials for the carrier's inspection. The HP office will arrange for repair or replacement without waiting for claim settlement.

## 2-5. PREPARATION FOR USE

### 2-6. Power Requirements

2-7. The 4192A requires a power source of 100, 120, 220 Volts ac ±10%, or 240 Volts ac +5% -10%, 48 to 66Hz single phase; power consumption is 150VA maximum.

WARNING

**THIS IS A SAFETY CLASS I PRODUCT (PROVIDED WITH A PROTECTIVE EARTH TERMINAL). AN UNINTERRUPTIBLE SAFETY EARTH GROUND MUST BE PROVIDED FROM THE MAIN POWER SOURCE TO THE INSTRUMENT'S INPUT WIRING TERMINALS, POWER CORD, OR SUPPLIED POWER CORD SET. WHENEVER THE SAFETY EARTH GROUND HAS BEEN IMPAIRED, THE INSTRUMENT MUST BE MADE INOPERATIVE AND BE SECURED AGAINST ANY UNINTENDED OPERATION. IF THIS INSTRUMENT IS TO BE ENERGIZED VIA AN AUTOTRANSFORMER FOR VOLTAGE REDUCTION, MAKE SURE THAT THE COMMON TERMINAL IS CONNECTED TO THE EARTH POLE OF THE POWER SOURCE.**

### 2-8. Line Voltage and Fuse Selection

CAUTION

**BEFORE CONNECTING THE INSTRUMENT TO THE POWER SOURCE, make sure that the correct fuse has been installed and that the line voltage selection switch is set to the correct voltage.**

2-9. Figure 2-1 provides instructions for line voltage and fuse selection. The line voltage selection switch and the proper fuse are factory installed for 100 or 120 volts ac operation. Current ratings for the fuse are printed under the fuseholder on the instrument's rear-panel and are listed, with HP part numbers, in Figure 2-1.

CAUTION

**Use the proper fuse for the line voltage selected. Make sure that only fuses for the required rated current and of the specified type are used for replacement. The use of mended fuses or short-circuited fuse-holders must be avoided.**

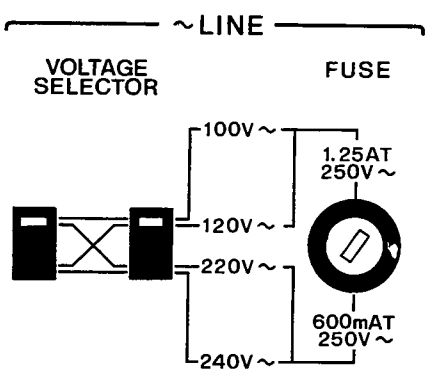


**Line Voltage Selection**

Use a screwdriver to set the Line Voltage Selector switch to the appropriate voltage.

**Fuse Removal**

Using a screwdriver, turn the fuse holder CCW45° or until it pops-out of the fuse socket.

| Line Voltage | Fuse Rating | HP Part No. |
|---|---|---|
| 100V/120V | 1.25AT, 250V, Slow Blow | 2110 – 0305 |
| 220V/240V | 0.6AT, 250V, Slow Blow | 2110 – 0016 |

**Figure 2-1. Line Voltage and Fuse Selection.**

## 2-10. POWER CABLE

2-11. To protect operating personnel, the National Electrical Manufacturer's Association (NEMA) recommends that the instrument panel and cabinet be grounded. The Model 4192A is equipped with a three-conductor power cable which, when plugged into an appropriate ac power receptacle, grounds the instrument. The offset pin on the power cable is the ground wire.

2-12. To preserve the protection feature when operating the instrument from a two contact outlet, use a three prong to two prong adapter (HP Part No. 1251-8196) and connect the green pigtail on the adapter to power line ground.

CAUTION

**The mains plug must only be inserted in a socket outlet provided with a protective earth contact. The protective action must not be negated by the use of an extension cord (POWER CABLE) without protective conductor (GROUNDING).**

2-13. Figure 2-2 shows the available power cords which may be used in various countries. Also shown is the standard power cord furnished with the instrument. HP Part numbers, applicable standards for power plug, power cord color, electrical characteristics and countries using each power cord are listed in the figure. If assistance is needed for selecting the correct power cable, contact the nearest Hewlett-Packard office.

## 2-14. Interconnections

2-15. To interconnect the 4192A to an external controller or peripheral device using the HP-IB interface capability (IEEE Std. 488/ANSI-MC1.1), connect the HP-IB interface cable between the HP-IB connector on the rear panel of the 4192A and the HP-IB connector on the peripheral device. Refer to paragraph 3-109 for details on the HP-IB.

When an external frequency synthesizer is used, remove the cable connected between the VCO OUTPUT and EXT VCO connectors (located on the 4192A's rear panel), connect the OUTPUT of the external frequency synthesizer to the EXT VCO connector, and connect the 1MHz or 10MHz REFERENCE OUTPUT of the external frequency synthesizer to the 4192A's EXT REFERENCE connector. Refer to paragraph 3-131 for details on using an external frequency synthesizer.

When an X-Y recorder is used, connect the RECORDER OUTPUTS connectors (located on the 4192A's rear panel) to the X and Y axes connectors of the X-Y recorder. If the X-Y recorder is equipped with remote TTL pen lift control, connect the 4192A's PEN LIFT connector to the X-Y recorder's pen lift terminal. Refer to paragraph 3-137 for details on using an X-Y recorder.

OPTION 900 — United Kingdom

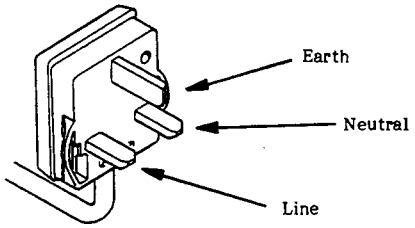


Plug : BS 1363A, 250V
Cable : HP 8120-1351

OPTION 901 — Australia/New Zealand

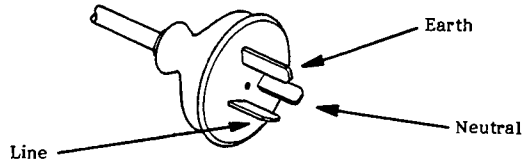


Plug : NZSS 198/AS C112, 250V
Cable : HP 8120-1369

OPTION 902 — European Continent

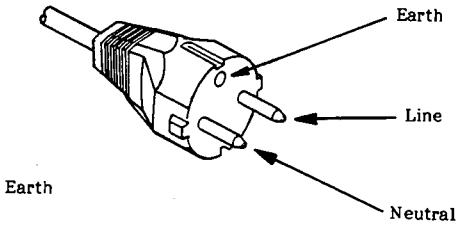


Plug : CEE-VII, 250V
Cable : HP 8120-1689

OPTION 903 — U.S./Canada

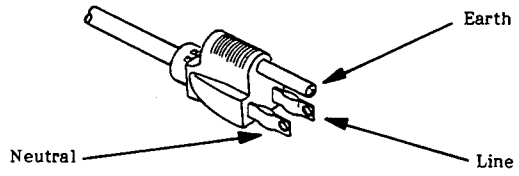


Plug : NEMA 5-15P, 125V, 15A
Cable : HP 8120-1378

OPTION 905** — Any country

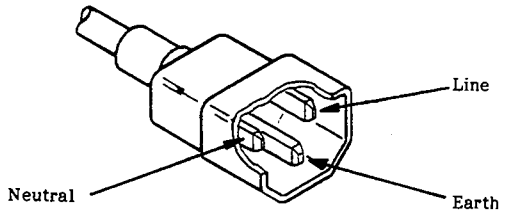


Plug : CEE 22-VI, 250V
Cable : HP 8120-1396

OPTION 906 — Switzerland

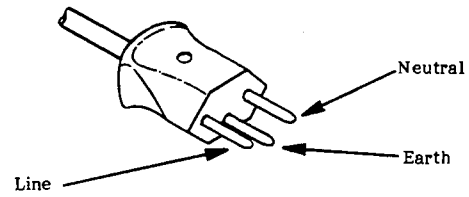


Plug : SEV 1011.1959-24507 Type 12, 250V
Cable : HP 8120-2104

OPTION 912 — Denmark

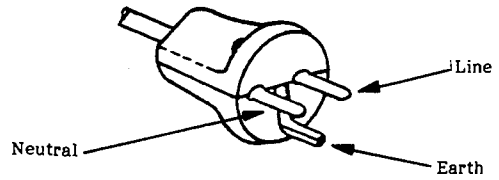


Plug : DHCR 107, 220V
Cable : HP 8120-2956

** Plug option 905 is frequently used for interconnecting system components and peripherals.

NOTE : Each option number includes a ' family ' of cords and connectors of various materials and plug body configurations (straight, 90 ° etc.).

Figure 2-2. Power Cables Supplied.

## 2-16. Operating Environment

2-17. Temperature. The instrument may be operated in environments with ambient temperatures from 0°C to +55°C.

2-18. Humidity. The instrument may be operated in environments with relative humidities to 95% at 40°C. However, the instrument should be protected from temperature extremes which cause condensation within the instrument.

## 2-19. INSTALLATION INSTRUCTIONS

2-20. The 4192A can be operated on a bench or can be rack-mounted. The 4192A is ready for bench operation as shipped from the factory. For bench operation, the instrument is equipped with two retractable legs that are located on the bottom cover. They are extended by pulling them away from the bottom cover.

## 2-21. Installation of Options 907, 908 and 909

2-22. The 4192A can be rack-mounted and operated as part of a measurement system. Rack mounting information for the 4192A is given in Figure 2-3.

| Option | Description | Kit Part Number |
|---|---|---|
| 907 | Handle Kit | 5061-9691 |
| 908 | Rack Flange Kit | 5061-9679 |
| 909 | Rack Flange & Handle Kit | 5061-9685 |

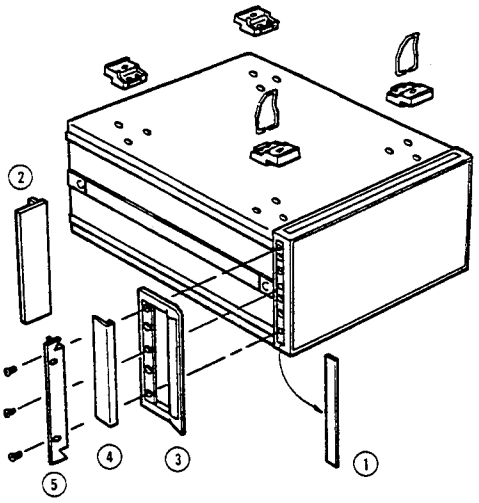


1. Remove the adhesive-backed trim strip (1) from both sides of the front-panel frame.
2. HANDLE INSTALLATION: Attach the handles (3) to both sides of the front-panel frame with the screws provided, and attach trim (4).
3. RACK MOUNTING: Attach rack mount flange (2) to both sides of the front-panel frame with the screws provided.
4. HANDLE AND RACK MOUNTING: Attach front handle (3) and rack mount flange (5) to both sides of the front-panel frame with screws provided.
5. When rack mounting (3 and 4 above), remove the four instrument feet (lift tab, and slide the foot in the direction of the tab).

**Figure 2-3. Rack Mount Kits.**

## 2-23. STORAGE AND SHIPMENT

### 2-24. Environment

2-25. The instrument should be stored in a clean, dry environment. The following environmental limitations apply to both storage and shipment:

| | |
|---|---|
| Temperature | −55°C to +75°C |
| Humidity | to 95% (at 40°C) |

The instrument should be protected from temperature extremes which cause condensation inside the instrument.

### 2-26. Packaging

2-27. Original Packaging. Containers and materials identical to those used in factory packaging are available through Hewlett-Packard offices. If the instrument is being returned to Hewlett-Packard for servicing, attach a tag indicating the type of service required, return address, model number, and full serial number. Also mark the container FRAGILE to assure careful handling. In any correspondence, refer to the instrument by model number and full serial number.

2-28. Other Packaging. The following general instructions should be used for repackaging with commercially available materials:

a. Wrap instrument in heavy paper or plastic. If shipping to Hewlett-Packard office or service center, attach tag indicating type of service required, return address, model number, and full serial number.

b. Use strong shipping container. A double-walled carton made of 350 pound test material is adequate.

c. Use enough shock absorbing material (3 to 4 inch layer) around all sides of the instrument to provide a firm cushion and prevent movement inside container. Protect front-panel with cardboard.

d. Seal shipping container securely.

e. Mark shipping container FRAGILE to ensure careful handling.

f. In any correspondence, refer to instrument by model number and full serial number.

# SECTION III
# OPERATION

## 3-1. INTRODUCTION

3-2. This section provides all the information necessary to operate the Model 4192A LF Impedance Analyzer. Included are descriptions of the front- and rear-panel controls, displays, lamps, and connectors; discussions on operating procedures and measuring techniques for various applications; and instructions on the instrument's SELF TEST function. A break-down of the contents of this section is given in Figure 3-1. Warnings, Cautions, and Notes are given throughtout; they should be carefully observed to secure the safety of the operator and the serviceability of the instrument.

WARNING

BEFORE THE INSTRUMENT IS SWITCHED ON, ALL PROTECTIVE EARTH TERMINALS, EXTENSION CORDS, AUTO-TRANSFORMERS AND DEVICES CONNECTED TO IT SHOULD BE CONNECTED TO A PROTECTIVE EARTH GROUNDED SOCKET. ANY INTERRUPTION OF THE PROTECTIVE EARTH GROUNDING WILL CAUSE A POTENTIAL SHOCK HAZARD THAT COULD RESULT IN PERSONAL INJURY.

ONLY FUSES WITH THE REQUIRED RATED CURRENT AND OF THE SPECIFIED TYPE SHOULD BE USED. DO NOT USE REPAIRED FUSES OR SHORT CIRCUITED FUSEHOLDERS. TO DO SO COULD CAUSE A SHOCK OR FIRE HAZARD.

Caution: Before the instrument is switched on, it must be set to the voltage of the power source, or damage to the instrument may result.

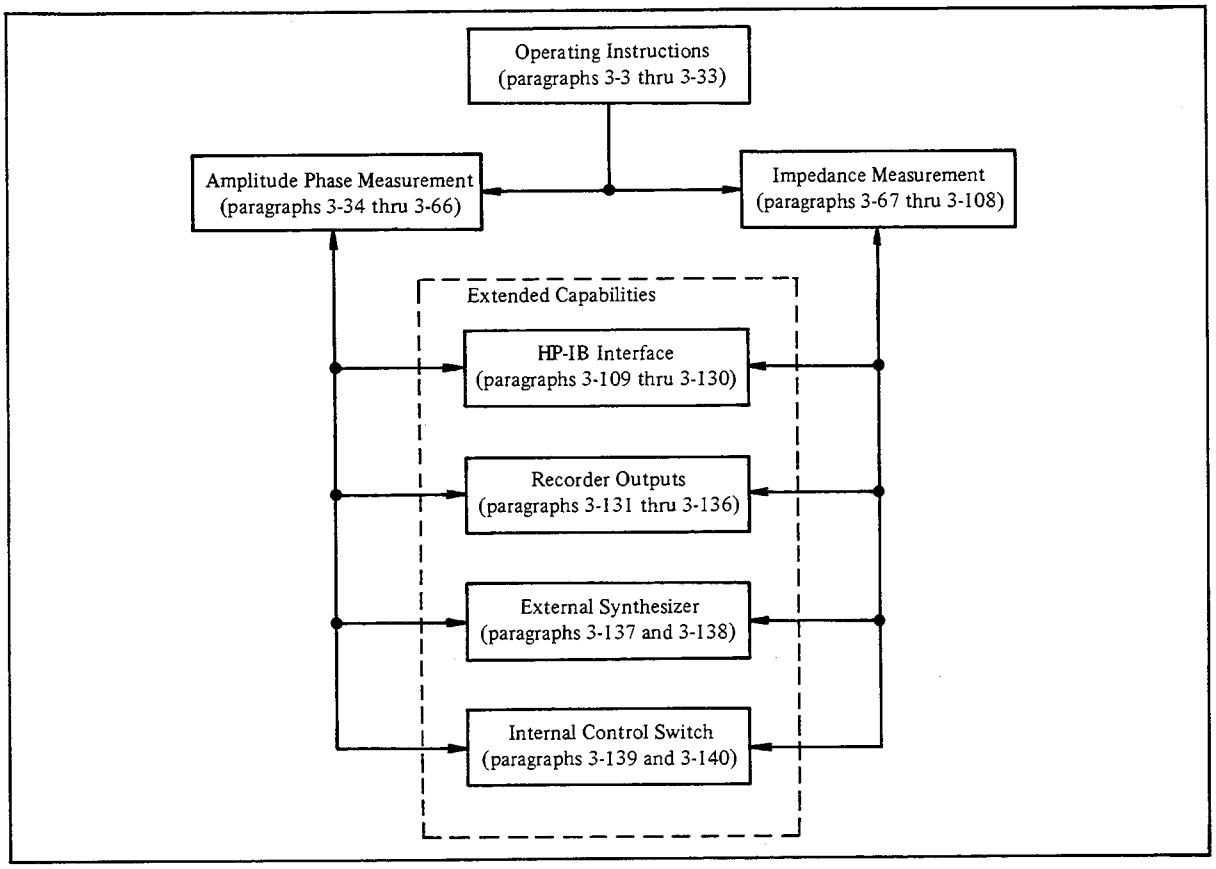


**Figure 3-1. Contents of Section III**

## 3-3. OPERATING INSTRUCTIONS

3-4. Operating instructions for the instrument's basic capabilities are given in paragraphs 3-5 through 3-33. Operating instructions for extended capabilities (remote operation via the HP-IB, X-Y Recorder Outputs, External Synthesizer, and Internal Control Switches) are covered in paragraphs 3-109 through 3-140.

### 3-5. Panel Features

3-6. Front- and rear-panel features are described in Figures 3-2 and 3-3, respectively. More detailed information on the panel displays and controls is given starting in paragraph 3-7.

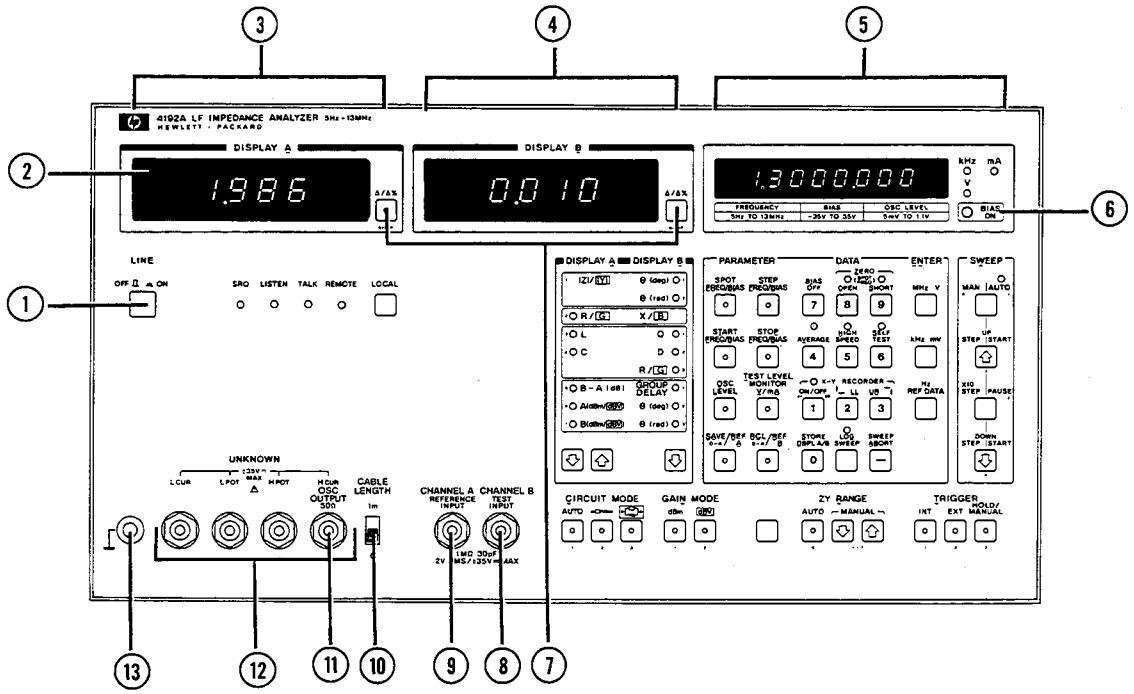


**(1) LINE OFF/ON**
Applies ac line power to the instrument when set to the ON position. Removes ac line power when set to the OFF position.

**(2) Trigger Lamp:**
Comes on each time the instrument is internally, externally, or manually triggered. Trigger mode is set by the TRIGGER keys (24) .

**(3) DISPLAY A:**
Displays the measured value of the parameter set by the DISPLAY A Function Select Keys (15) . Also displays error codes and messages, SELF TEST (32) results, ZERO offset (29) information, and the HP-IB address ((5) in Figure 3-3). Maximum 4½ digits; maximum display is 19999 for L and C measurements, 12999 for other parameter measurements. Number of display digits depends on OSC LEVEL (17) and the measuring range. Display annunciators light to indicate the units of the displayed value.

**(4) DISPLAY B:**
Displays the measured value of the parameter set by the DISPLAY B Function Select Keys (16). If the measurement cannot be made, 0F2 or – – – is displayed. When DISPLAY A Function (15) is set to A (dBm/dBV) or B (dBm/dBV), this display is blank. Maximum 4½ digits; maximum display is 18000 for phase ($\theta$) measurements, 12999 for other parameter measurements. Number of display digits depends on OSC LEVEL (17) and the measuring range. Display annunciators light to indicate the units of the displayed value.

**Figure 3-2. Front Panel Features (Sheet 1 of 10)**

(5) **Test Parameter Data Display (DISPLAY C):**
Displays test parameter values (FREQ. BIAS, and OSC LEVEL). Test parameters are set by the test PARAMETER Select keys (17). Maximum 7½ digits for frequency; 4½ digits for OSC LEVEL and DC BIAS. Annunciator lamps, located to the right of the display, light to indicate the units of the displayed value. Also displays error codes, overflow annunciation, and information related to the SAVE function.

(6) **BIAS ON Indicator:**
Comes on when dc bias is applied to the DUT; goes off when the BIAS OFF key (28) is pressed.

(7) **Δ/Δ% Keys and Indicators:**
These keys – one for DISPLAY A and one for DISPLAY B – are used for deviation (Δ) or percent deviation (Δ%) measurement. For percent deviation (Δ%), the [Blue] key (37) must be pressed before the Δ/Δ% key.

Δ (Delta): The difference between the measured value of the DUT and a previously stored reference value is displayed by pressing this key. The formula used to calculate the deviation is

$$A - B$$

where A is the measured value of the DUT and B is the stored reference value

Δ%: The difference between the measured value of the DUT and a previously stored reference value is displayed as a percentage of the reference value. The formula used to calculate the percent deviation is

$$\frac{A - B}{B} \times 100\ (\%)$$

where A is the measured value of the DUT and B is the stored reference value.

(8) **CHANNEL B (TEST INPUT) Connector:**
Used in conjunction with CHANNEL A (9) and OSC OUTPUT (11) in transmission characteristics measurements, i.e., gain/loss (B–A), level (A or B), phase, group delay. Output port of the network under test is connected to this connector. Input impedance is 1 MΩ ± 2%, shunted by 25 pF ± 5 pF. Maximum input voltage is AC 2 Vrms and DC ± 35V.

(9) **CHANNEL A (REFERENCE INPUT) Connector:**
Used in conjunction with CHANNEL B (8) and OSC OUTPUT (11) in transmission characteristics measurements, i.e., gain/loss (B–A), level (A or B), phase, group delay. The 5 Hz – 13 MHz signal from OSC OUTPUT (11) is simultaneously applied to the input port of the network under test and this connector. Input impedance, shunt capacitance, and maximum input voltage of CHANNEL A are the same as those of CHANNEL B (8).

(10) **CABLE LENGTH Switch:**
This switch has meaning in impedance measurements only. It facilitates balancing of the measuring bridge circuit and minimizes measurement errors when the standard 1 meter test leads are used.

1 m: Set the switch to this position when using the standard 1 meter test leads. Appropriate compensation is made for propagation delay and phase error caused by the test leads in high frequency measurements.

0: Set the switch to this position when using a direct attachment type test fixture (connects to the UNKNOWN terminals (12)).

(11) **OSC OUTPUT Connector:**
Used in conjunction with CHANNEL A (9) and CHANNEL B (8) in transmission characteristics measurements, i.e., gain/loss (B–A), level (A or B), phase, group delay. Provides a 5Hz to 13 MHz stimulus signal for the network under test (output of network is connected to CHANNEL B (8)) and the reference signal for CHANNEL A (9). Output impedance is approximately 50Ω.

(12) **UNKNOWN Terminals:**
Used for impedance/phase measurements – | Z |, |Y|, R, G, L, C, X, B, phase – these four BNC connectors provide the means to connect DUT's – components or networks – in a four terminal pair configuration: High current terminal ($H_{CUR}$), High potential terminal ($H_{POT}$), Low current terminal ($L_{CUR}$), and Low potential terminal ($L_{POT}$). Four terminal pair test fixture attaches directly to these terminals.

(13) **GROUND Terminal:**
This terminal is tied to the instrument's chassis ground and can be used in measurements that require guarding.

**Figure 3-2. Front Panel Features (Sheet 2 of 10)**

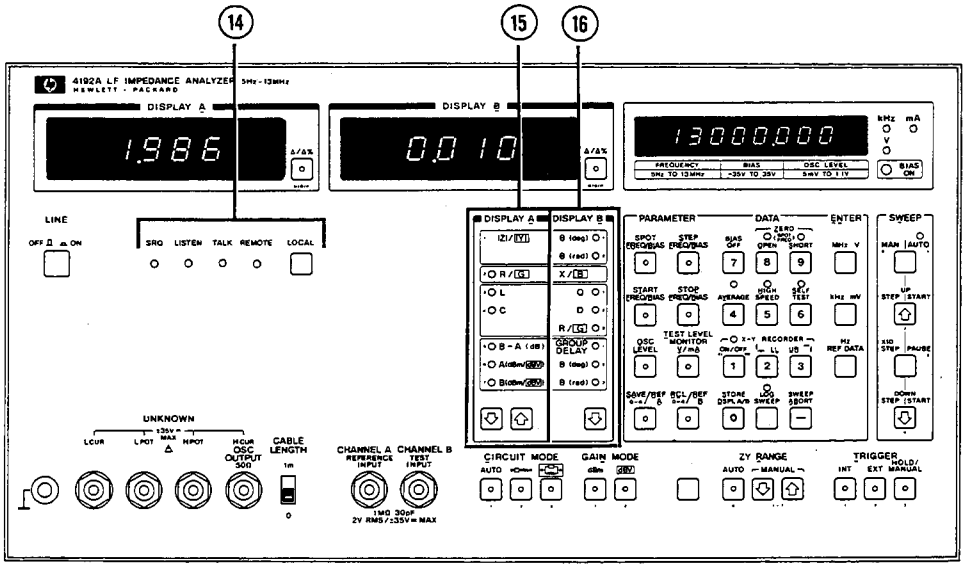


(14) **HP-IB Status Indicators and LOCAL key:**
These four LED lamps – SRQ, LISTEN, TALK, and REMOTE – indicate the status of the 4192A when it is interfaced with a controller via the HP-IB.
The LOCAL key, when pressed, releases the instrument from REMOTE (HP-IB) control and enables front-panel control. The LOCAL key does not function when the instrument is set to local lockout by the controller.

(15) **DISPLAY A Function Select Keys and Indicators:**
These keys – [⇩] and [⇧] – are used in conjunction with the CIRCUIT MODE keys (27) to select the primary measurement parameter for display on DISPLAY A. The selectable parameters are |Z|/|Y|, R/G, L, C, B-A (dB), A (dBm/dBV), or B (dBm/dBV). The selected parameter is indicated by the corresponding LED lamp. Pressing either of these keys shifts the selected parameter in the indicated direction ( [⇩] , [⇧] ).

|Z|/|Y|: When CIRCUIT MODE (27) is set to AUTO or ⊶⊡⊸⊸, the instrument measures |Z| (absolute value of the DUT's impedance) and $\theta$ (phase angle) in degrees or radians (depends on DISPLAY A Function (16) setting); the results are displayed on DISPLAY A (|Z|) and DISPLAY B ($\theta$) to provide a polar representation (|Z|∠$\theta$) of the DUT's impedance. When CIRCUIT MODE (27) is set to ⊶⊡⊸, the instrument measures |Y| (absolute value of the DUT's admittance) and $\theta$ (phase angle) in degrees or radians; the results are displayed on DISPLAY A (|Y|) and DISPLAY B ($\theta$) to provide a polar representation (|Y|∠$\theta$) of the DUT's admittance.

R/G : When CIRCUIT MODE (27) is set to ⊶⊡⊸⊸, the instrument measures R (resistance of the DUT) and X (reactance of the DUT); the results are displayed on DISPLAY A (R) and DISPLAY B (X) to provide a rectangular (Cartesian) representation (R±jX) of the DUT's impedance.
When CIRCUIT MODE (27) is set to ⊶⊡⊸, the instrument measures G (conductance) and B (susceptance); the results are displayed on DISPLAY A (G) and DISPLAY B (B) to provide a rectangular (Cartesian) representation (G ± jB) of the DUT's admittance.

L : Measures inductance and – depending on the setting of DISPLAY B Function (16) – Q (quality factor), D (dissipation factor), or R/G (equivalent series resistance or equivalent parallel conductance [to measure G, CIRCUIT MODE (27) must be set to ⊶⊡⊸]);

**Figure 3-2. Front Panel Features (Sheet 3 of 10)**

the results are displayed on DISPLAY A and DISPLAY B, respectively.

C : Measures capacitance and – depending on the setting of DISPLAY B Function (16) – Q (quality factor), D (dissipation factor, or R/G (equivalent series resistance or equivalent parallel conductance [to measure G, CIRCUIT MODE (27) must be set to ]); the results are displayed on DISPLAY A (3) and DISPLAY B (4), respectively.

B-A (dB) : Measures the relative amplitude of the reference input (CHANNEL A (9)) and the test input (CHANNEL B (8)). The result is displayed on DISPLAY A (3). Also measures group delay or phase in degrees or radians (selected by DISPLAY B Function (16)).

The value displayed on DISPLAY A (3) is the gain or loss of the network under test. Group delay or phase is displayed on DISPLAY B (4).

A (dBm/dBV) :

Measures the absolute amplitude of the reference input (CHANNEL A (9)) in dBm or dBV (selected by GAIN MODE Select key (26)). Amplitude is displayed on DISPLAY A (3).

When this parameter is selected, DISPLAY B Function (16) has no selectable parameters and DISPLAY B (4) is blank.

B (dBm/dBV) :

Measures the absolute amplitude of the test input (CHANNEL B (8)); identical to A (dBm/dBV) in all other respects.

(16) **DISPLAY B Function Select Key and Indicators:** This key, ⇩ , is used in conjunction with the CIRCUIT MODE keys (27) to select the secondary measurement parameter for display on DISPLAY B (4). Selectable parameters are $\theta$ (phase), Q (quality factor), D (dissipation factor), R/G (equivalent series resistance or equivalent parallel conductance), and GROUP DELAY. Phase ($\theta$) can only be selected when DISPLAY A Function (15) is set to |Z|/|Y| or B-A (dB); Q, D, and R/G, only when DISPLAY A Function is set to L or C; GROUP DELAY, only when DISPLAY A Function is set to B-A (dB).

The selected parameter is indicated by the corresponding LED lamp.

Pressing this key shifts the selected parameter in the indicated direction ( ⇩ ).

$\theta$ (deg) : Measures, in degrees, the phase angle of |Z| (absolute impedance of the DUT) or |Y| (absolute admittance of the DUT).

$\theta$ (rad) : Measures, in radians, the phase angle of |Z| (absolute impedance of the DUT) or |Y| (absolute admittance of the DUT).

X/B : These parameters are automatically selected when DISPLAY A Function (15) is set to R/G. X is the reactance of DUT's impedance; B is the susceptance of the DUT's admittance.

Q : Measures the quality factor of the DUT. DISPLAY A Function (15) must be set to L (inductance) or C (capacitance).

D : Measures the dissipation factor of the DUT. DISPLAY A Function (15) must be set to L (inductance) or C (capactance).

R/G : Measures the resistance or conductance of the DUT. DISPLAY A Function (15) must be set to L (inductance) or C (capacitance). CIRCUIT MODE keys (27) determine which of the two parameters (R or G) is selected.

GROUP DELAY:

Measures the group delay between the reference input (CHANNEL A (9)) and test input (CHANNEL B (8)). Can only be selected when DISPLAY A Function (15) is set to B-A (dB).

$\theta$ (deg) : Measures, in degrees, the phase difference between the reference input (CHANNEL A (9)) and test input (CHANNEL B (8)). Can only be selected when DISPLAY A Function (15) is set to B-A (dB).

$\theta$ (rad) : Measures, in radians, the phase difference between the reference input (CHANNEL A (9)) and test input (CHANNEL B (8)). Can only be selected when DISPLAY A Function (15) is set to B-A (dB).

**Figure 3-2. Front Panel Features (Sheet 4 of 10)**

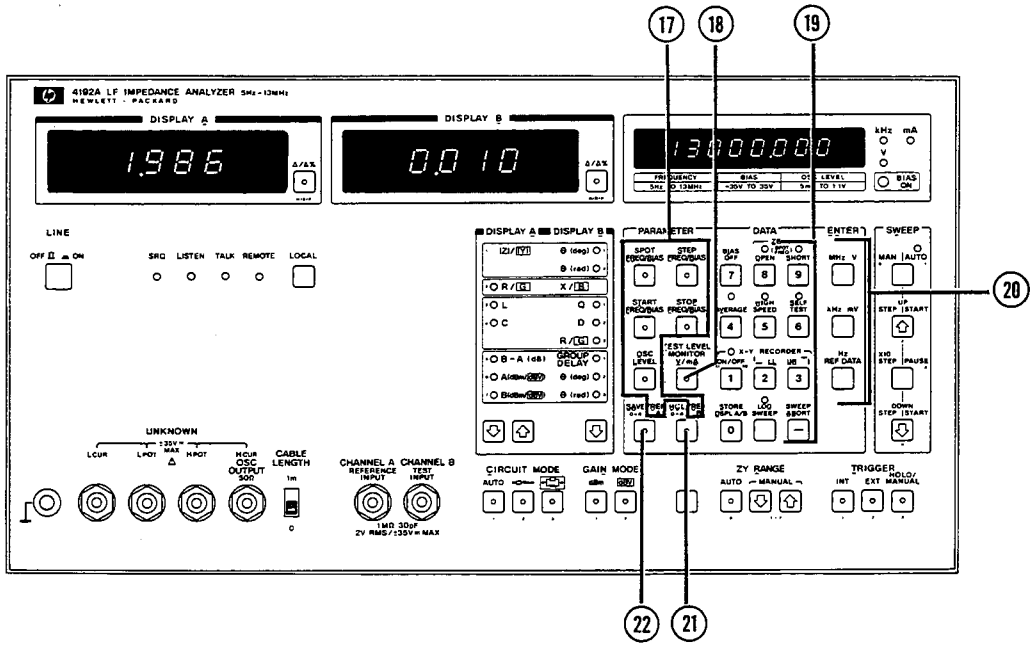


(17) **Test PARAMETER Select Keys and Indicators:** These keys are used in conjunction with the DATA input keys (19), ENTER keys (20), and the BLUE key (37) to assign values to the various test parameters; to monitor the test parameters; to save and recall front-panel control settings; and to input reference data for deviation and percent deviation (Δ/Δ% (7)) measurements. Pressing a test parameter key will cause the value of the selected test parameter to be displayed on the Test Parameter Data Display (5). Lighted indicator lamp (center of each key) indicates selected test parameter. Only one test parameter can be selected. Test parameters labelled in blue are accessible by first pressing the BLUE key (37).

SPOT FREQ/BIAS:
For single point measurements. Sets the spot frequency and spot bias.
When spot bias is set, BIAS ON Indicator (6) lights.

STEP FREQ/BIAS:
For swept measurements. Sets the step (increment) frequency and step (increment) bias.

START FREQ/BIAS :
For swept measurements. Sets the start frequency and start bias.

STOP FREQ/BIAS :
For swept measurements. Sets the stop frequency and stop bias.

OSC LEVEL :
Sets the voltage (rms) of the internal frequency synthesizer.

REF A : For deviation and percent deviation (Δ/Δ% (7)) measurements. Sets the reference value for DISPLAY A.

REF B : For deviation and percent deviation (Δ/Δ% (7)) measurements. Sets the reference value for DISPLAY B.

**Figure 3-2. Front Panel Features (Sheet 5 of 10)**

(18) **TEST LEVEL MONITOR Key and Indicator:**
Pressing this key displays the level of the test signal applied to the DUT or, if the BLUE key (37) is first pressed, the current through the DUT on the Test Parameter Data Display (5). The appropriate annunciator lamp will light.

(19) **DATA Input Keys:**
These keys (0 thru 9, decimal point, and minus sign) are used to input test parameter values, register numbers for SAVE (22) and RCL (21) functions, and reference data for DISPLAY A (REF A) and DISPLAY B (REF B) deviation measurements ($\Delta/\Delta\%$ (7)). Data is displayed on the Test Parameter Data Display (5) as it is input. Each key has a control function – labelled in blue above the key – which is accessible via the BLUE key (37). These control functions are explained individually in (28) thru (36).

(20) **ENTER Keys:**
These keys instruct the instrument to read the test parameter data and reference data set by the PARAMETER Select keys (17) and DATA Input keys (19). Data are not input until one of these keys is pressed.

MHz, V : Enters the value input from the DATA Input keys (19) in MHz for frequency parameters or V for bias parameters.

kHz, mV : Enters the value input from the DATA Input keys (19) in kHz for frequency parameters or mV for bias parameters.

Hz, REF DATA:
Enters the value input from the DATA Input key (19) in Hz for frequency parameters or as reference data for deviation measurements.

(21) **RCL (Recall) Key:**
This key is used to return the instrument to the front-panel control settings, test parameter values, calibration data (ZERO OPEN/SHORT (29)), and reference data saved by the SAVE key (22). DATA Input keys (19) 0 thru 4 are used to select the desired register. For example, to return the instrument to the control settings stored in register 0, press RCL/REF 0-A/B and [0] .

(22) **SAVE Key:**
This key is used to save (store) front-panel control settings, test parameter values, calibration data (ZERO OPEN/SHORT (29)), and reference data. There are five registers (0 thru 4), so five sets of control settings can be saved. And because the registers are nonvolatile, saved control settings can be recalled (RCL key (21)) even if the instrument has been turned off. To store existing control settings, press SAVE/REF 0-A/B [0] and enter the register number from the DATA Input keys (19).

**Figure 3-2. Front Panel Features (Sheet 6 of 10)**

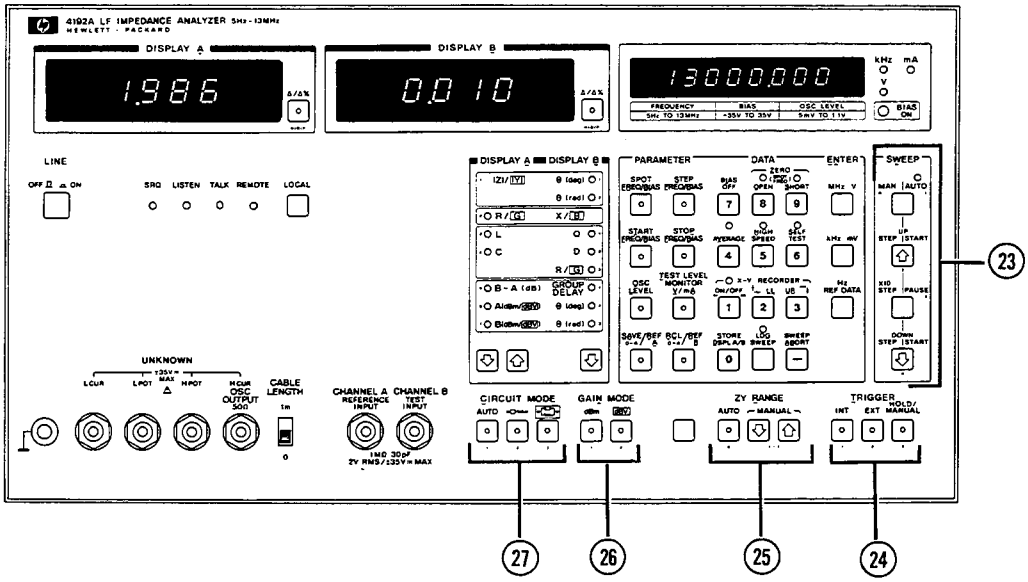


(23) **SWEEP Control Keys and Indicator:**
These keys control the instrument's sweep function. Frequency, bias voltage, and oscillator level can be swept. (Oscillator level can be swept in MAN. mode only.) BIAS ON Indicator (6) must be on for bias voltage sweep; off for frequency sweep. The MAN AUTO key controls the sweep mode. Indicator comes on in AUTO mode. The functions of the other keys are described below for each mode. For log sweep, press the LOG SWEEP key (35).

AUTO

START UP :
Starts the frequency or bias voltage sweep from the value set by the START FREQ./BIAS test parameter key (17). Sweeps up at the increment (step) set by the STEP FREQ./BIAS test parameter key (17).
Also restarts the sweep after a PAUSE.

PAUSE : Temporarily stops the sweep to allow the sweep step or sweep direction to be changed. Sweep is restarted by pressing the START UP or START DOWN key.

START DOWN :
Starts the frequency or bias voltage sweep from the value set by the STOP FREQ./BIAS test parameter key (17). Sweeps down at the increment (step) set by the STEP FREQ./BIAS test parameter key (17). Also restarts the sweep after a PAUSE.

MAN.

STEP UP : Each time this key is pressed, the frequency or bias voltage is incremented by the value set by the STEP FREQ./BIAS test parameter key (17). If the OSC LEVEL or TEST LEVEL MONITOR key is pressed, oscillator level will be incremented by 1mV (when level is less than 100mV) or 5mV

**Figure 3-2. Front Panel Features (Sheet 7 of 10)**

(when level is greater than 100mV) each time this key is pressed. Sweep becomes continuous when this key is pressed and held.

X10 STEP :

This key is used with the STEP UP [⇧] or STEP DOWN [⇩] key. Holding this key down while pressing STEP UP or STEP DOWN increases the sweep step value by a factor of ten.

STEP DOWN :

Each time this key is pressed, the frequency or bias voltage is decremented by the value set by the STEP FREQ./BIAS test parameter key (17). If the OSC LEVEL key or TEST LEVEL MONITOR key is pressed, oscillator level will be decremented by 1mV (when level is less than 100mV) or 5mV (when level is greater than 100mV) each time this key is pressed. Sweep becomes continuous when this key is pressed and held.

(24) **TRIGGER:**

These keys select the trigger mode for triggering measurement (Internal, External or Hold/Manual):

INT : Internal trigger signal enables instrument to make repeated automatic measurements. Measurement speed varies depending on the type of measurement, oscillator frequency, and whether normal, average, or high speed is selected.

EXT : Measurement is triggered by external trigger signal through rear panel EXT TRIGGER input connector ((7) in Figure 3-3).

HOLD/MANUAL :

Measurement is triggered each time this key is pushed. Measurement data is held until the next time the key is pressed.

(25) **ZY RANGE Select Keys and Indicator:**

In impedance measurements, these keys select the measurement range and ranging method of the absolute value of impedance (|Z| : 1 Ω ~ 1MΩ) or admittance (|Y| : 10μS ~ 10μS).

AUTO (when indicator is lit) :

Optimum range for the sample value is automatically selected.

MANUAL (when indicator is not lit) :

Measurement range is fixed (even when the sample is changed). Manual ranging is done by pressing adjacent DOWN ( [⇩] ) or UP ( [⇧] ) key.

*Note: Pressing DOWN ( [⇩] ) or UP ( [⇧] ) key sets the ranging mode to Manual even if the ranging mode was set to AUTO.*

(26) **GAIN MODE Selector Key:**

In amplitude/phase measurements, these keys select the appropriate unit for A (absolute amplitude of reference input) and B (absolute amplitude of test input).

dBm : Displays absolute amplitude in dBm ($=20 \log_{10} V + 13.01$).

dBV : Displays absolute amplitude in dBV ($=20 \log_{10} V$).

(27) **CIRCUIT MODE Selector Key:**

These keys select desired measurement circuit mode to be used for R/G, C, or L measurement.

AUTO : Automatically selects appropriate parallel or series equivalent circuit for the sample value. When ZY RANGE (25) up-ranges from the 1kΩ (10ms) range to 10kΩ (1ms) range, circuit mode changes from  to 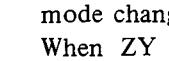 . When ZY RANGE (25) down-ranges from the 100Ω (100ms) range to 10Ω (1s) range, circuit mode changes from 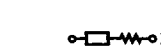 to 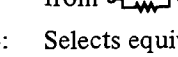 .

 : Selects equivalent series circuit.

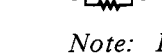 : Selects equivalent parallel circuit.

*Note: In |Z|/|Y| measurements, ranging does not affect the measurement circuit mode. CIRCUIT MODE keys are used to select |Z| or |Y|. When the circuit mode is set to AUTO or* *, |Z| is selected; when the circuit mode is set to* *, |Y| is selected.*

**Figure 3-2. Front Panel Features (Sheet 8 of 10)**

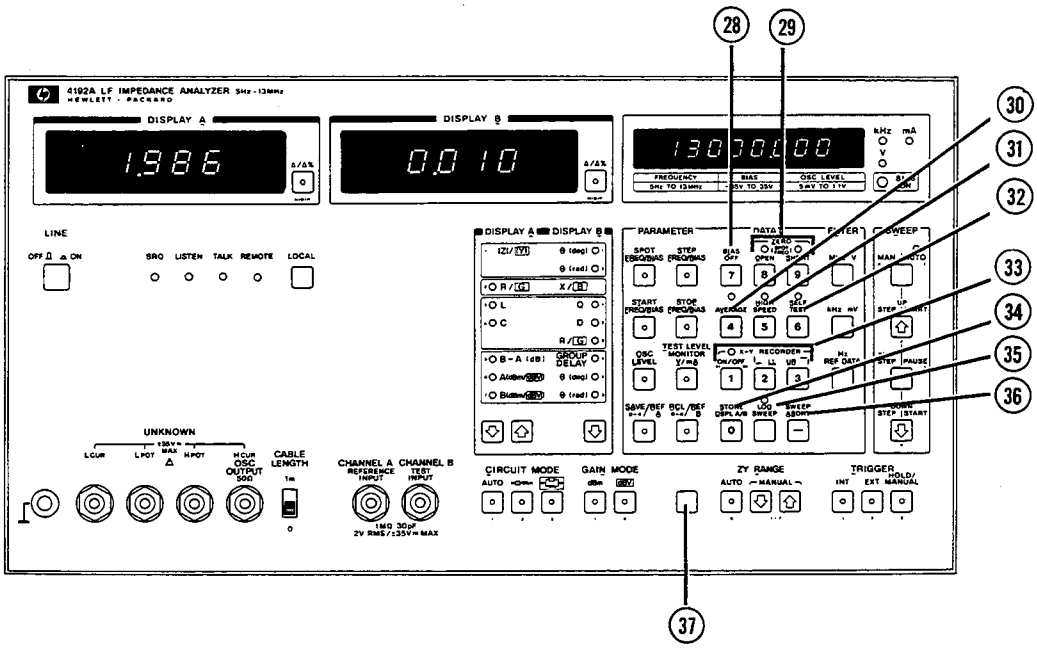


*Note: The nine secondary functions, (28) thru (36), of the DATA Input keys (19) are accessible by first pressing the BLUE key (37).*

### (28) BIAS OFF Key:

This key disables internal dc bias operation. When this key is pressed, no dc bias is applied to the DUT and BIAS ON indicator (6) goes off.

### (29) ZERO Offset Keys and Indicators:

These keys perform compensation for the residuals present in the test fixture, test leads, and measurement circuit. ZERO offset can be performed for one spot frequency only. If the spot frequency in changed, ZERO offset must be performed again.

OPEN : If this key is pressed when the test fixture or test leads are terminated OPEN and the indicator is off, measured value at this time is stored as residual admittance (G + jB) data and the indicator comes on. While the indicator is on, compensation for the residuals is made.

SHORT : If this key is pressed when the test fixture or test leads are SHORTed and the indicator is off, measured value at this time is stored as residual impedance (R + jX) data and the indicator comes on. While the indicator is lit, compensation for the residuals is made.

### (30) AVERAGE Key and Indicator:

This key sets the 4192A to the average measurement mode. In the average measurement mode (when the indicator is lit), measurement data has a higher resolution and repeatability than measurement data in the normal or high speed measurement mode. This function is released by repressing the key after pressing the Blue key (37) or by setting the 4192A to the high speed measurement mode (31).

**Figure 3-2. Front Panel Features (Sheet 9 of 10)**

(31) **HIGH SPEED Key and Indicator:**

This key sets the 4192A to the high speed measurement mode. In the high speed measurement mode (when the indicator is lit), measurement time is shorter (approximately ½) than the measurement time in the normal measurement mode. This function is released by repressing the key after pressing the BLUE key (37) or by setting the 4192A to the average measurement mode.

(32) **SELF TEST Key and Indicator:**

This key initiates the instrument's SELF TEST function. During SELF TEST (when the indicator is on), six tests, which check the basic functional operation of the instrument, are automatically performed. The results (Pass or Fail) are displayed on DISPLAY A(3). When the SELF TEST is completed, this mode is released automatically and normal measurement mode (indicator is off) is set.

(33) **X-Y RECORDER Function Keys and Indicator:**

These keys control the instrument's analog output capability. Voltage proportional to the measurement results is output from the X-Y RECORD OUTPUT connectors (see (11) in Figure 3-3) located on the instrument's rear-panel. Graphs can be plotted with this capability.

ON : Analog data representing the measurement results and test parameter value (frequency/bias) are output from the DISPLAY A, DISPLAY B, and FREQ./BIAS RECORDER OUTPUTS on the rear-panel. Indicator lamp is on in this state.

OFF : No analog data is output, and X-Y Recorder zero- and full-scale adjustments can be made. Indicator lamp is off in this state.

↓← LL : Provides a reference voltage (0V) from each rear-panel RECORDER OUTPUT. Used for zero-scale adjustment of the X-Y Recorder. When this key is pushed, the recorder pen will be positioned at the lower-left (X and Y are zero) of the plot area.

UR →↑ : Provides a reference voltage (1V) from each rear-panel RECORDER OUTPUT. Used for full-scale adjustment of the X-Y Recorder. When this key is pushed, the recorder pen will be positioned at the upper-right (X and Y are maximum) of the plot area.

(34) **STORE DSPL A/B Key:**

This key simultaneously memorizes the measured values displayed on DISPLAY A (3) and DISPLAY B (4) as reference values for deviation measurement.

(35) **LOG SWEEP Key and Indicator:**

This key sets the log sweep mode. In the log sweep mode (when the indicator is on), the frequency is swept at 20 steps/decade. The steps are automatically selected at logarithmic regular intervals between the decade of the START frequency and the decade of the STOP frequency. STEP. FREQ. has no meaning in log sweep. This function is released by repressing the key (after pressing the BLUE key (37)).

(36) **SWEEP ABORT Key:**

This key releases sweep frequency (bias voltage) measurement and activates a spot frequency measurement at the frequency (voltage) point where the sweep is aborted.

(37) **BLUE Key:**

This key is pressed prior to pressing a blue label function key to interchange a normal key function with a blue label function.

This key is pressed to access and release the functions and test parameters labeled in blue on the Test PARAMETER keys (17), DATA Input keys (19), and the Δ/Δ% keys(7).

**Figure 3-2. Front Panel Features (Sheet 10 of 10)**

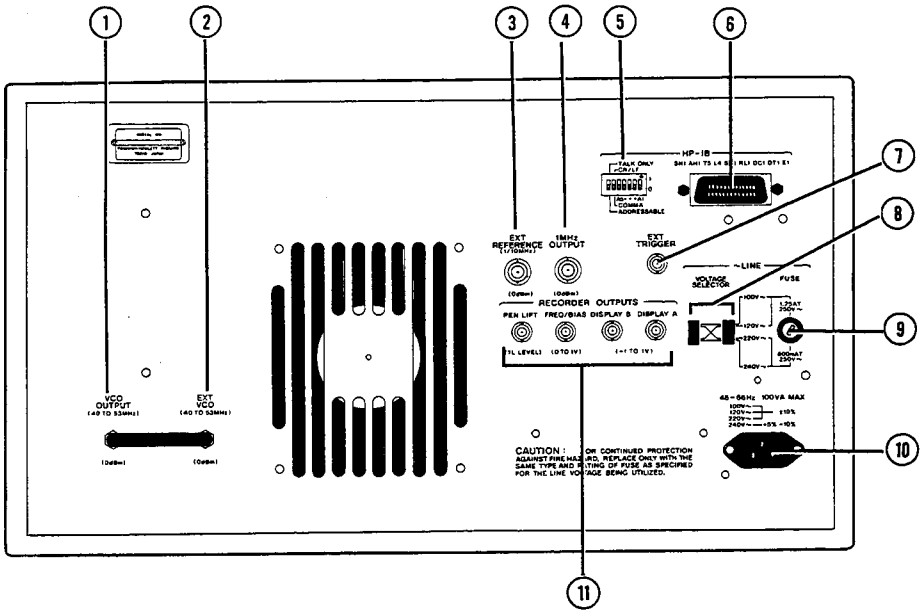


**(1) VCO OUTPUT Connector:**

Female BNC connector; outputs a 40.000005 MHz to 53 MHz signal from the internal synthesizer. This connector is normally connected to the EXT VCO connector (2) with a short-connector.

**(2) EXT VCO Connector:**

Female BNC connector; receives a 40.000005 MHz to 53 MHz (input level: 0 dBm ~ 3 dBm) signal to generate the measurement frequency (5 Hz to 13 MHz). This connector can be connected to an external frequency synthesizer for better accuracy, stability, and resolution; or to the instrument's internal synthesizer. Normally connected to the VCO OUTPUT connector (1) with a short-connector.

**(3) EXT REFERENCE Connector:**

Female BNC connector; receives a 1 MHz or 10 MHz reference signal from an external signal source to improve the stability of the internal synthesizer. Input impedance is approximately 50 Ω.

**(4) 1 MHz OUTPUT Connector:**

Female BNC connector; outputs a 1 MHz square wave (≥ 1.6 Vp-p) to phase-lock external instruments. Output impedance is approximately 50 Ω.

**(5) HP-IB Control Switch:**

This switch sets the instrument's HP-IB address (0 ~ 30), data output format (A or B), and interface capability (Talk Only or Addressable). Specific information on this switch is given in paragraph 3-117.

**(6) HP-IB Connector:**

Twenty-four pin connector; connects the instrument to the HP-IB for remote operations.

**(7) EXT TRIGGER Connector:**

This connector is used to externally trigger the instrument by inputting an external trigger signal. TRIGGER key on front panel should be set to EXT. Specific information is provided in paragraph 3-22.

**Figure 3-3. Rear Panel Features (Sheet 1 of 2)**

(8) **~ LINE VOLTAGE SELECTOR Switch:**

These switches select the appropriate ac operating voltage. Selectable voltages are 100V/120V ±10% and 220V ±10%/240V ±5% -10% (48∿66Hz). Refer to paragraph 2-8.

(9) **~ LINE FUSE Holder:**

Instrument's power-line fuse is installed in this holder.

100V/120V operation : 1.25AT, 250V (HP P/N: 2110-0305)
220V/240V operation : 0.6AT, 250V (HP P/N: 2110-0016)

Refer to paragraph 2-8.

(10) **~ LINE Input Receptacle:**

AC power cord is connected to this receptacle. Refer to paragraph 2-10.

(11) **RECORDER OUTPUTS Connectors:**

These connectors output dc voltages proportional to the measurement display outputs and test frequency (or internal dc bias voltage), and a pen control signal for the X-Y recorder. Results of swept (frequency of bias) measurements can be plotted by connecting an X-Y recorder to these connectors.

PEN LIFT connector :

Outputs pen up/down control signal. When the 4192A is set as follows, this connector outputs a LOW level TTL signal (pen down).

(1) X-Y RECORDER key on the front-panel is set to ON.

(2) START UP key or START DOWN key is pressed when X-Y RECORDER and SWEEP MAN/AUTO keys on the front-panel are set to ON.

At other times, this connector outputs a HIGH level TTL signal (pen up).

FREQ/BIAS connector :

Outputs voltage proportional to the test frequency or internal dc bias voltage (from 0V at START frequency/voltage to 1V at STOP frequency/voltage). The output voltage is proportional to the logarithm of the frequency when LOG SWEEP is set to ON.

DISPLAY B connector :

Outputs voltage proportional to the value displayed on DISPLAY B. Normalized value is 1V (max.).

DISPLAY A connector :

Outputs voltage proportional to the value displayed on DISPLAY A. Normalized value is 1V (max.).

Refer to paragraph 3-121 for specifics.

**Figure 3-3. Rear Panel Features (Sheet 2 of 2)**

## 3-7. SELF TEST

3-8. The 4192A is equipped with an automatic self-diagnostic function that can be initiated at any time to confirm normal operation of the instrument's basic functions. The SELF TEST can be initiated from the front-panel by pressing the BLUE key and the SELF TEST key, or via HP-IB remote control (program code S1). When the SELF TEST is initiated (indicator lamp is on), the six tests listed in Table 3-1 are automatically performed and the results (pass code or one of the error codes listed in the table) are displayed on DISPLAY A. If no errors are detected, PASS is displayed on DISPLAY A and the instrument is returned to normal measurement mode (SELF TEST indicator is off). If an error is detected, the corresponding error code is displayed on DISPLAY A and the SELF TEST stops. If the instrument fails the SELF TEST, contact the nearest Hewlett-Packard Service Office (see list at back of this manual).

*Note: An abbreviated SELF TEST, which includes test 1 (one second only), 2, 3, and 6 (at 100 kHz only) of the standard SELF TEST, is performed each time the instrument is turned on. During this abbreviated SELF TEST, only error codes are displayed.*

## 3-9. Initial Control Settings

3-10. To facilitate operation, the instrument is automatically set to the following initial control settings each time it is turned on:

Panel Controls :

DISPLAY A ..... |Z|
DISPLAY B ..... $\theta$ (deg)
Test Parameter Data Display .. SPOT FREQ
BIAS ..... OFF
ZERO OPEN ..... OFF
ZERO SHORT ..... OFF
AVERAGE ..... OFF
HIGH SPEED ..... OFF
SELF TEST ..... OFF
X-Y RECORDER ..... OFF
LOG SWEEP ..... OFF
SWEEP ..... OFF
CIRCUIT MODE .....AUTO ( )
GAIN MODE ..... dBm
ZY RANGE..... AUTO
TRIGGER ..... INT
$\Delta/\Delta\%$ ..... OFF

**Table 3-1. 4192A SELF TEST**

| Test Number | Description | Display | |
|---|---|---|---|
| | | Pass | Fail |
| 1 | All numerical displays and indicator lamps on the front-panel come on and remain on as long as the SELF TEST key is being pressed. Check that all displays and indicator lamps are on. | P-01* | |
| 2 | Checks four RAM's (Random Access Memory). | P-02 | E-20, E-21 |
| 3 | Checks fourteen ROM's (Read Only Memory). | P-03 | E-30 ~ E-43 |
| 4 | Checks that the interrupt signal is present and that it is of the correct frequency. | P-04 | E-50, E-51 |
| 5 | Checks the integrator in the VRD (Vector Raito Detector) circuit. | P-05 | E-61, E-62 |
| 6 | Checks that the frequency setting of the internal synthesizer is normally done at each decade. | P-06 | E-70, E-71, E-72 |

*P-01 indicates that test 1 has been completed. It does not mean that the instrument has passed test 1. The operator must determine whether the instrument has passed or failed this test.

Test Parameters :

| | |
|---|---|
| SPOT FREQ | 100kHz |
| STEP FREQ | 1kHz |
| STOP FREQ | 13MHz |
| START FREQ | 5Hz |
| OSC LEVEL | 1Vrms |
| SPOT BIAS | 0V |
| STEP BIAS | 1V |
| START BIAS | -35V |
| STOP BIAS | +35V |
| REF A | 0 |
| REF B | 0 |

## 3-11. Displays

3-12. The 4192A has three display sections: DISPLAY A, DISPLAY B, and a Test Parameter Data Display (hereinafter called DISPLAY C). DISPLAY A and DISPLAY B are the primary displays; they are described in paragraphs 3-13 and 3-14, respectively. DISPLAY C is described in paragraph 3-15. The BIAS ON Indicator is described in paragraph 3-16.

3-13. DISPLAY A provides direct readout of the primary measurement parameter in amplitude/phase measurements and impedance measurements.

In impedance measurements, DISPLAY A displays the absolute value of the vector impedance, $|Z|$; the absolute value of the vector admittance, $|Y|$; resistance, R; conductance, G; inductance, L; or capacitance, C. In amplitude/phase measurements, DISPLAY A displays the measured value of B-A (dB), the gain or loss between CHANNEL A and CHANNEL B; A (dBm/dBV), the amplitude of the signal input to CHANNEL A; or B (dBm/dBV), the amplitude of the signal input to CHANNEL B.

All values are displayed with a maximum of 4½ digits. The actual number of display digits depends on the setting of other control functions such as OSC LEVEL, ZY RANGE, etc. Maximum display is 19999 for inductance and capacitance measurements; 12999, for all other parameters. Decimal point and the appropriate unit annunciator (e.g., pF, mH, μS, MΩ) are also displayed. If the selected measurement cannot be made, because the value of the DUT is outside the instrument's measurement range or because the front-panel controls are incorrectly set, one of the following will be displayed.

| | |
|---|---|
| OF1 | – – – |
| OF2 | E-06 |
| UCL | E-07 |

Refer to Tables 3-2 and 3-3 for the meaning of each of these annunciations. When a SHORT or OPEN ZERO offset adjustment is being made, CAL is displayed. DISPLAY A also displays the pass- and error-codes (P-01 through P-06 and E-20 through E-73) related to the instrument's SELF TEST function. Refer to Table 3-4 for the meanings of SELF TEST error-codes E-20 through E-73.

3-14. DISPLAY B provides direct readout of the secondary measurement parameter in amplitude-phase measurements and impedance measurements. This display is blank when DISPLAY A function is set to A (dBm/dBV) or B (dBm/dBV).

In impedance measurements, DISPLAY B displays the value of the impedance/admittance; phase angle, $\theta$ (degrees or radians); reactance, X; susceptance, B; quality factor, Q; dissipation factor, D; resistance, R; or conductance, G.

In amplitude/phase measurements, DISPLAY B displays either group delay or phase difference, $\theta$ (degrees or radians).

Refer to paragraph 3-13 for specifics on number of digits, maximum display, unit annunciators, etc.

If the selected measurement cannot be made, OF2 or – – – is displayed. Refer to Table 3-3 for the meaning of these annunciations.

3-15. DISPLAY C displays all test parameter data – SPOT FREQ/BIAS, STEP FREQ/BIAS, START FREQ/BIAS, STOP FREQ/BIAS, OSC LEVEL, TEST LEVEL, and REF A or REF B value. Frequency is displayed with a maximum of 7½ digits; BIAS, OSC LEVEL, and TEST LEVEL are displayed with a maximum of 4 digits; and REF A and REF B values are displayed with a maximum of 4½ digits. Error-codes displayed on DISPLAY C are discussed in paragraph 3-17.

3-16. The BIAS ON Indicator comes on to warn the operator that the instrument is applying a dc bias voltage across the DUT.

3-17. Error-codes and annunciations related to operator error and out-of-range measurement are listed and described in Tables 3-2 and 3-3, respectively. Error-codes for errors detected during SELF TEST are listed and described in Table 3-4. If the instrument fails the SELF TEST, i.e., if one of the error-codes listed in Table 3-4 is displayed on DISPLAY A, contact the nearest Hewlett-Packard Sales/Service Office.

**Table 3-2. Operational Errror-codes**

| Error-code | Meaning |
|---|---|
| E-01 | An attempt was made to input a test parameter value or reference value that is out-of-range. |
| E-02 | AUTO SWEEP was attempted when the selected test parameter was REF A, REF B, OSC LEVEL, or TEST LEVEL MONITOR; or MAN SWEEP was attempted when the selected test parameter was REF A or REF B. |
| E-03 | AUTO or MAN SWEEP was attempted when the STOP FREQ. (or BIAS) is lower than the START FREQ. (or BIAS). |
| E-04 | MAN SWEEP was attempted when the SPOT FREQ. (or BIAS) is lower than the START FREQ. (or BIAS) or higher than the STOP FREQ. (or BIAS). |
| E-05 | The STORE DSPL A/B key was pressed when DISPLAY A and/or DISPLAY B is set to Δ/Δ% measurement or is displaying OF1, OF2, UCL, or – – –. |
| E06 | REF A, REF B, Δ, or Δ% key was pressed when no reference data for the deviation measurement is stored. |
| E07 | ZERO OPEN or ZERO SHORT operation could not be properly performed. |
| E-08 | SAVE 5 ~ 9 or RCL (Recall) 5 ~ 9 was attempted (only memory locations 0 ~ 4 are available). |
| E-09 | RCL (Recall) was attempted on an empty memory. |
| E-10 | In swept frequency measurements of Group Delay, STEP FREQ. is too low for the START FREQ./STOP FREQ. sweep range. |

**Table 3-3. Annunciations (Sheet 1 of 2)**

| DISPLAY | | Meanings | |
|---|---|---|---|
| A | B | DISPLAY A | DISPLAY B |
| OF1 | – – – | Measured value of \|Z\| or \|Y\| exceeds 130% of full scale of the ZY RANGE. | Measurement cannot be performed. |
| OF2 | Significant value | Measured value exceeds 200% of full scale of display range. | Measurement is performed correctly. |
| Significant value | OF2 | Measurement is performed correctly. | Measured value exceeds 200% of full scale of display range. |
| OF2 | OF2 | Measured value exceeds 200% of full scale of display range. | Measured value exceeds 200% of full scale of display range. |
| UCL *1 | – – – | The instrument's internal measurement circuit is saturated. | Measurement cannot be performed. |

**Table 3-3. Annunciations (Sheet 2 of 2)**

| DISPLAY | | Meanings | |
|---|---|---|---|
| A | B | DISPLAY A | DISPLAY B |
| Significant value | – – – | Measurement is performed correctly. | Measurement cannot be performed because:<br>(1) When function is set to $\theta$, Q, or D, the measured value of \|Z\| or \|Y\| is less than 5% of full scale of the ZY RANGE.<br>(2) When GROUP DELAY measurement is being performed, the test frequency to be automatically selected next is outside the selectable test frequency range (5Hz and 13MHz). |
| – – – | – – – | Auto ranging of ZY RANGE is being performed. | |
| Significant value | Blank | Measurement is performed correctly. | DISPLAY B function is blank when DISPLAY A function is set to A (dBm/dBV) or B (dBm/dBV). |
| CAL | Blank | ZERO offset adjustment is being performed. | |

*1. When the measuring frequency is set to 10MHz or above and ZY RANGE is held, measured values output 500ms after DISPLAY A indicates "UCL" are invalid.
*2. Specific information on GROUP DELAY measurement is provided in paragraph 3-63.

**Table 3-4. SELF TEST Error-codes**

| Display | Meaning |
|---|---|
| E-20, E-21 | One of the four RAM's (Random Access Memory) is not functioning properly. |
| E-30 ~ E-43 | One of the fourteen ROM's (Read Only Memory) is not functioning properly. |
| E-50, E-51 | The line frequency detection circuit is not functioning properly. |
| E-61, E-62 | Integrator in the VRD (Vector Ratio Detector) is not functioning properly. |
| E-70, E-71, E-72 | Internal synthesizer is not functioning properly. |

### 3-18. Test Signal

3-19. The internal frequency synthesizer provides a sinusoidal wave test signal that has an accuracy of 55 ppm. The frequency range is from 5 Hz to 13 MHz, and signal level is 5 mVrms to 1.1 Vrms. The test signal is output from the OSC OUTPUT connector ($H_{CUR}$ of the UNKNOWN terminals) on the front-panel. Test frequency and test level range, resolution, and accuracy are given in Table 3-5.

*Note: Test signal accuracy, stability, and resolution can be improved by connecting an external frequency synthesizer to the EXT VCO connector on the rear-panel. Specific information on measurements using an external synthesizer is given in paragraph 3-137.*

*Note: In impedance measurements, the level of the test signal across the DUT depends on the impedance of the DUT. To monitor the actual level of test signal across the DUT, press the TEST LEVEL MONITOR key. (Refer to paragraph 3-91 for specifics.)*

### 3-20. Measurement Modes

3-21. The 4192A has three selectable measurement modes: NORMAL, HIGH SPEED, and AVERAGE.

(1) NORMAL Measurement Mode:
This mode is automatically set each time the instrument is turned on. In this mode, the integration time of the instrument's A/D converter is equal to the period of the line frequency. Line frequency ripple on the dc voltage used for integration is rejected (filtered).

(2) HIGH SPEED Measurement Mode:
This mode is set by pressing the HIGH SPEED key. Measurement speed in this mode is approximately twice that of the NORMAL mode; however, resolution is reduced and accuracy is not specified. Integration time is 2.5 ms. Line frequency ripple is not rejected (filtered).

(3) AVERAGE Measurement Mode:
This mode is set by pressing the AVERAGE key. Resolution, accuracy, and repeatability in this mode are much better than in NORMAL mode or HIGH SPEED mode. The displayed measurement value is the average of seven measurements. Integration time is 10 times the period of the line frequency. Line frequency ripple is rejected (filtered).

*Note: Measurement times for each mode at each DISPLAY A/B function setting are given in paragraph 3-55 for amplitude/phase measurements and in paragraph 3-89 for impedance measurements.*

**Table 3-5. Frequency and Output Level of Test Signal**

| | Setting Range | Resolution | Setting Accuracy*1 |
|---|---|---|---|
| Measurement Frequency | 5 Hz ~ 10 kHz | 1 mHz | Setting Value ±50 ppm. |
| | 10 Hz ~ 100 kHz | 10 mHz | |
| | 100 kHz ~ 1 MHz | 100 mHz | |
| | 1 MHz ~ 13 MHz | 1 Hz | |
| OSC Output Level*2 | 5 mVrms ~ 100 mVrms | 1 mVrms | 5 Hz ~ 1 MHz: (5 + 10/f)% + 2mV<br>1 MHz ~ 13 MHz: (4 + 1.5f)% + 2mV |
| | 100 mVrms ~ 1.1 Vrms | 5 mVrms | 5 Hz ~ 1 MHz: (5 + 10/f)% + 10mV<br>1 MHz ~ 13 MHz: (4 + 1.5F)% + 10mV |

*1 : At 23°C ± 5°C.

*2 : UNKNOWN terminals open (impedance measurements) or terminated with 50Ω (amplitude/phase measurement), f: measurement frequency (Hz), F: measurement frequency (MHz).

### 3-22. Trigger Modes

3-23. The 4192A has three selectable trigger modes: INTERNAL, EXTERNAL, and HOLD/MANUAL.

(1) INTERNAL Trigger Mode:
In this mode, measurement is automatically and repeatedly triggered. Trigger speed depends on the type of measurement, test frequency, and measurement mode.

(2) EXTERNAL Trigger Mode:
Measurement is triggered by applying a TTL level pulse to the EXT TRIGGER connector on the rear-panel. Refer to Figure 3-4 for specifics.

(3) HOLD/MANUAL Trigger Mode:
Measurement is triggered each time the HOLD/MANUAL key is pressed. Measurement data is held until the next time the key is pressed.

*Note: Measurement can also be triggered via the HP-IB. Refer to Figure 3-38.*

*Note: Triggering in EXT and HOLD/MANUAL modes must be slow enough to allow the instrument to complete each measurement. If a trigger signal is received before measurement is completed, it is ignored.*

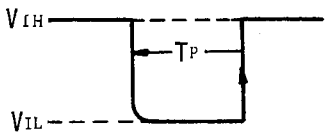


| | |
|---|---|
| Input Levels : | $2V < V_{IH} < 5.5V$<br>$0V \leq V_{IL} < 0.6V$ |
| Input Current : | Maximum 1 mA<br>(at $V_{IH}$ = 5.5 V) |
| Low Level Input Current: | Maximum −0.6 mA<br>($V_{IL}$ = 0.4 V) |
| Pulse Width : | $T_P \geq 1$ msec |
| Trigger Timing : | Leading Edge |

**Figure 3-4. External Trigger Pulse**

### 3-24. Setting Test Parameters

3-25. The 4192A provides eleven test parameters. They are listed, along with range and resolution, in Table 3-6. Use the following procedure to set the value of these parameters:

(1) Press the desired PARAMETER key.

(2) Set the desired value with the DATA keys. The set value will be displayed on DISPLAY C.

(3) Press the appropriate ENTER key to enter this value.

*Note: Parameter values can also be set via the HP-IB. Refer to paragraph 3-123 for specifics.*

*Note: If the parameter value is out-of-range (see Table 3-6), E-01 will be displayed on DISPLAY C for approximately one second and the previous value is retained.*

### 3-26. Deviation Measurement

3-27. When many components of similar value are to be tested, it may be more practical to measure the difference between the value of the component and a predetermined, or ideal, reference value than measuring the DUT value itself. When the purpose of the measurement is to observe the change of a component's value versus changes in temperature, frequency, bias, etc., a direct measurement of this change (deviation) makes examination more meaningful and easier.

3-28. Deviation measurements can be made for either or both DISPLAY A and/or DISPLAY B parameter measurements. There are two methods of inputting reference values for deviation measurements: 1) input the reference value using the DATA keys, or 2) input the measured value of the reference component by pressing the STORE DSPL A/B key. Deviation is displayed as either the deviation (Δ) from the reference value or the percent deviation (Δ%).

(1) Deviation Measurement Δ (Delta):
The difference between the measured value of the DUT and a previously stored reference value (REF A or REF B) is displayed. The formula used to calculate the deviation is

$$A - B$$

where A is the measured value of the DUT and B is the stored reference value.

**Table 3-6. Test Parameters**

| Parameter | Description | Range |
|---|---|---|
| SPOT FREQ | The spot frequency | Range : 5Hz ~ 13MHz<br>Resolution : 1mHz at 5Hz ~ 10kHz;<br>10mHz at 10kHz ~ 100kHz;<br>100mHz at 100kHz ~ 1MHz;<br>1Hz at 1MHz ~ 13MHz |
| START FREQ | The start frequency for swept frequency measurements | |
| STOP FREQ | The stop frequency for swept frequency measurements | |
| STEP FREQ | The step frequency for swept frequency measurements | Range: 1mHz ~ 13MHz<br>Resolution: 1mHz at 1mHz ~ 10kHz;<br>10mHz at 10kHz ~ 100kHz;<br>100mHz at 100kHz ~ 1MHz;<br>1Hz at 1MHz ~ 13MHz |
| SPOT BIAS | The spot bias voltage. | Range: -35V ~ +35V.<br>Resolution: 10mV. |
| START BIAS | The start voltage for swept voltage measurements | |
| STOP BIAS | The stop voltage for swept voltage measurements | |
| STEP BIAS | The step voltage for swept voltage measurements | Range: 10mV∿35V.<br>Resolution: 10mV. |
| OSC LEVEL | The level (rms) of the signal output by the internal synthesizer | Range: 5mV ~ 1.1V.<br>Resolution: 1mV at 5mV ~ 100mV;<br>5mV at 100mV ~ 1.1V |
| REF A | The reference value for DISPLAY A deviation measurements | Range and resolution are the same as those of the DISPLAY A/B parameter. |
| REF B | The reference value for DISPLAY B deviation measurements | |

(2) Percent Deviation Measurement Δ% (Delta Percent):
The difference between the measured value of the DUT and a previously stored reference value (REF A or REF B) is displayed as a percentage of the reference value. The formula used to calculate the percent deviation is

$$\frac{A - B}{B} \times 100\ (\%)$$

where A is the measured value of the DUT and B is the stored reference value.

3-29. Use the following procedure to perform deviation measurements:

(1) Set the front-panel controls for normal amplitude-phase or impedance measurement. (Basic procedure for amplitude-phase measurement is given in Figure 3-10, and in Figure 3-30 for impedance measurements.)

(2) Press the BLUE key and the REF A or REF B key. At this time, the previously stored reference value or E-06 will be displayed on DISPLAY C. E-06 simply means there is no reference data for

the selected display function; ignore it and proceed to step 3.

(3) Enter the desired reference value using the numeric DATA keys. (E-06 annunciation will disappear.) This value will be displayed on DISPLAY C.

(4) Press the ENTER key labeled REF DATA. This stores the value displayed on DISPLAY C as the reference value.

*Note: To store the measured (displayed) value of a reference sample (DUT) as reference data, use the following procedure:*

*(a) Connect the sample to the instrument and make one measurement.*

*(b) Press the BLUE key and the STORE DSPL A/B key. The values displayed on DISPLAY A and DISPLAY B will be stored as REF A and REF B data, respectively.*

(5) Press the Δ/Δ% key on DISPLAY A and/or DISPLAY B. The value displayed on the display (A or B) is the difference (deviation) between the stored reference value and the measured value. For percent deviation measurement, press the BLUE key before pressing the Δ/Δ% key.

*Note: Reference data stored for one measurement function cannot be used for another measurement function; that is, reference data stored for an impedance measurement cannot be used for a resistance measurement.*

## 3-30. Continuous Memorization of Control Settings (SAVE and RCL Functions)

3-31. The 4192A is equipped with five non-volatile storage registers. These registers are used to store five different, frequently used front-panel control settings. Stored control settings are preserved (not erased) in the registers even when the instrument is turned off.

Frequently used control settings can be saved and then recalled instead of having to reenter the measurement conditions each time. This feature improves efficiency in applications where repetitive measurements are made.

Almost all front-panel control settings and test parameter settings, including reference data and zero calibration data, can be saved. Exceptions are listed below.

HP-IB status
DISPLAY A/B measurement data
LINE OFF/ON
CABLE LENGTH
BIAS ON
SPOT BIAS

3-32. Use the following procedure to save and recall a measurement condition:

(1) Set the front-panel controls and test parameters as desired.

(2) Press the SAVE key and the register number (0-4). All front-panel control settings and test parameter settings are now saved, or memorized, in the specified register.

(3) To restore the instrument to the control settings and test parameters saved in step (2), press the RCL key and the register number.

3-33. The instrument is equipped with two rechargeable batteries that provide power for the storage registers when the instrument is turned off. They are automatically recharged while the instrument is turned on. Specifications are given below.

| | |
|---|---|
| Operating time: | 3600 hours (typical) after full charge. |
| Recharge time: | Time required to fully recharge the batteries is 72 hours. |
| Lifetime: | 5 years (at 25°C). |

## 3-34. AMPLITUDE/PHASE MEASUREMENT

3-35. The Model 4192A LF Impedance Analyzer can accurately measure the gain/loss, phase, group delay and level of many types of circuits. It displays all measured parameters with 4½ digit numeric displays. The built-in frequency synthesizer can be set to any test frequency between 5.000Hz and 13.000000MHz, and can be swept within that frequency range with 1mHz (maximum) resolution. Instructions for amplitude/phase measurements are given in paragraph 3-34 to 3-66.

### 3-36. Measurement Functions

3-37. Most amplitude-gain measurements are based on relative measurements where the signals at the input and output ports of a network are compared to determine how the network behaves as a signal processor. The 4192A simultaneously measures two independent, complementary parameters in each measurement cycle. These measurement functions are classified, for display purpose, into two groups: DISPLAY A and DISPLAY B functions, as given in Table 3-7. Measurement results can be displayed as deviation or percent deviation from stored reference values. Deviation measurements are described in paragraph 3-26.

### 3-38. Measurement Ranges

3-39. The 4192A can measure transmission parameters, gain/loss (B–A), level (A/B), phase ($\theta$) and group delay, over the measurement ranges listed in Table 3-8. Measurement resolution, also listed in the table, are for NORMAL and AVERAGE measurement modes. Resolution in HIGH SPEED measurement mode is one digit lower than these values.

**Table 3-8. Measurement Range for Amplitude-Phase Measurements**

| Measurement Function | Measurement Range | Resolution |
|---|---|---|
| B–A | 0dB ~ ± 20dB | 0.001dB |
| | ± (20dB ~ 100dB) | 0.01dB |
| A/B (dBm) | + 13.8dBm ~ - 20dBm | 0.001dBm |
| | - 20dBm ~ - 87dBm | 0.01dBm |
| A/B (dBV) | + 0.8dBV ~ - 20dBV | 0.001dBV |
| | - 20dBV ~ - 100dBV | 0.01dBV |
| GROUP DELAY*1 | 0.0001μs ~ 1.9999μs | 100ps |
| | 0.001μs ~ 19.999μs | 1ns |
| | 0.01μs ~ 199.99μs | 10ns |
| | 0.0001ms ~ 1.9999ms | 100ns |
| | 0.001ms ~ 19.999ms | 1μs |
| | 0.01ms ~ 199.99ms | 10μs |
| | 0.0001s ~ 1.9999s | 100μs |
| | 0.001s ~ 19.999s | 1ms |
| $\theta$ (deg) | 0° ~ ± 180° | 0.01° |
| $\theta$ (rad) | $-\pi$ ~ - 1.000 | 0.001 |
| | - 1.0000 ~ + 1.0000 | 0.0001 |
| | + 1.000 ~ + $\pi$ | 0.001 |

*1: Measurement range at GROUP DELAY is determined automatically by ΔF (STEP FREQ ×2) and $\Delta\theta$. Specific information on GROUP DELAY measurements is provided in paragraphs 3-63 to 3-66.

**Table 3-7. DISPLAY A/B Functions for Amplitude/Phase Measurements**

| DISPLAY A Function | | DISPLAY B Function | |
|---|---|---|---|
| B – A (dB) | Relative Amplitude of the Reference Input and the Test Input | GROUP DELAY | Group Delay in seconds |
| | | $\theta$ (deg) | Phase Difference in degrees |
| | | $\theta$ (rad) | Phase Difference in radians |
| A (dBm/dBV) | Absolute Amplitude of the Reference Input | | |
| B (dBm/dBV) | Absolute Amplitude of the Test Input | | |

## 3-40. OSC OUTPUT

3-41. In amplitude/phase measurements, the output signal from the OSC OUTPUT terminal is applied to a power splitter (HP Part No.: 04192-61001, furnished with the 4192A) to produce two output signals that are in phase and of equal amplitude. One of these signals is applied to CHANNEL A and is used as the reference input; the other signal is applied to input port of the network under test. The output port of the network is then connected to CHANNEL B. Figure 3-5 shows the equivalent circuit for the OSC OUTPUT. The circuit consists of a low (zero) impedance source in series with a 50Ω resistor which determines the output impedance. The output signal level is variable from 5mV to 1.1Vrms when terminated with 50Ω. Specific information on the internal synthesizer is provided in paragraph 3-18.

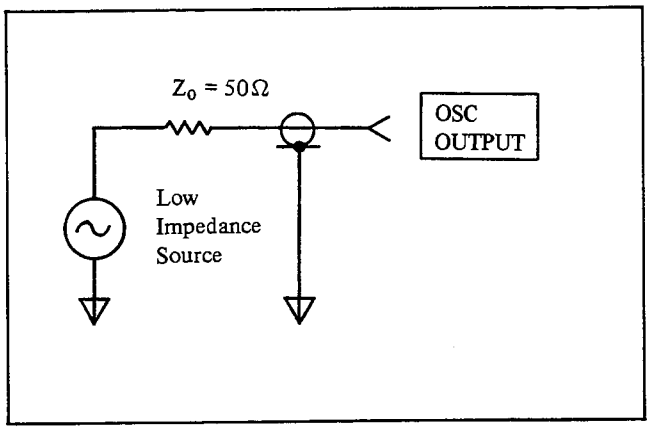


**Figure 3-5. Equivalent Output Circuit**

## 3-42. CHANNEL A/B

3-43. For basic amplitude/phase measurements, the reference input is obtained by connecting one of the output signals from the power splitter connected to the OSC OUTPUT. The test input is obtained by inserting the network to be tested between the power splitter and CHANNEL B. Since the signals divided by the power splitter are identical, the signal applied to CHANNEL A represents the input to the network while the signal applied to CHANNEL B is the output of the network. By comparing these two signals, the 4192A measures the gain or loss, phase shift and group delay introduced by the network. When the frequency is swept over the band of interest with amplitude, phase and group delay, measurement data represent the amplitude and phase response of the transfer function in the frequency domain.

3-44. For production testing, it is often necessary to compare a newly manufactured network to a production standard. The 4192A, being a dual channel instrument, lends itself well to this application. When comparing two networks, the standard network is connected between the power splitter and CHANNEL A to obtain the reference. The network to be tested is then connected between the power splitter and CHANNEL B. In this case, the 4192A compares the output signals of the two networks and any differences between the networks are reflected as deviation from 0dB (B–A amplitude), 0 degrees (phase) or 0s (group delay).

3-45. Figure 3-6 shows the equivalent circuit for the CHANNEL A/B. The resistor, Rin, represents the 1MΩ input resistance; the capacitor, Cs, represents the 25pF ± 5pF shunt capacitance. This high input impedance has a minimum loading effect on the input signal and allows the 4192A to be used for characterizing networks having output impedances other than 50Ω. Figure 3-7 shows the input impedance, $Z_t$, as a function of frequency. At low frequencies, the reactance of Cs is very high, making $Z_t$ nearly equal to Rin. As frequency increases, the decreasing reactance of Cs becomes more and more significant, causing $Z_t$ to decrease. At high frequencies, Rin is no longer significant and $Z_t$ is slightly less than the reactance of Cs (approximately 500Ω at 13MHz).

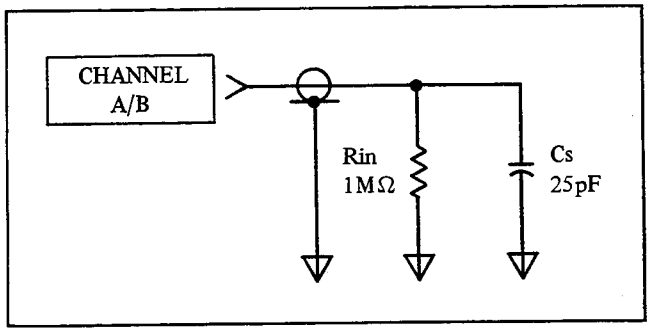


**Figure 3-6. Equivalent Input-Circuit**

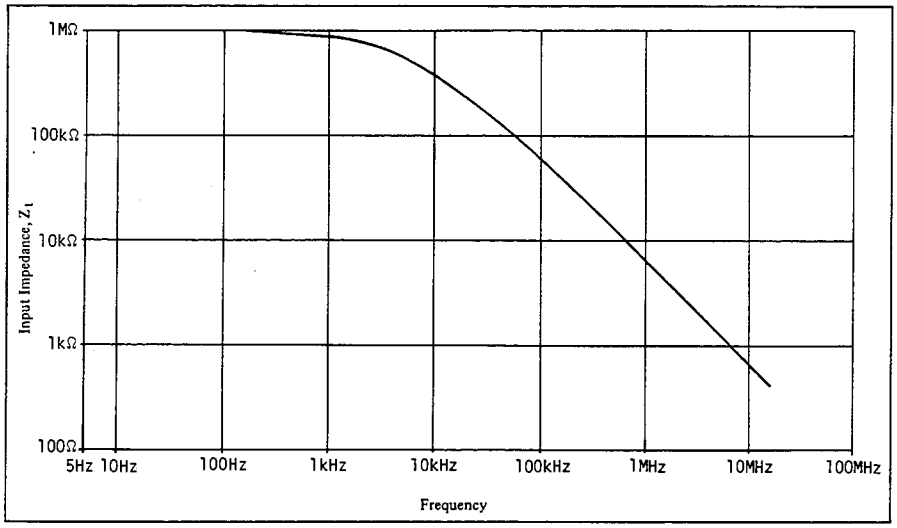


**Figure 3-7. $Z_t$ vs Frequency**

### 3-46. Input Configurations

3-47. Figure 3-8 illustrates and describes the basic input configurations for various types of measurements. Connections of these input configurations should be made using coaxial cables with BNC connectors as listed in Table 3-9. When making input connections, observe the following guidelines:

(1) Keep input cables as short as possible.

(2) Make the total cable length in each channel equal. This is particularly important when measuring phase (or group delay) at high frequencies.

(3) When impedance terminations are required, use shielded terminations equipped with suitable RF connectors as listed in Table 3-10. Place terminations at the end of the transmission line.

Note: When making a relative gain/loss (B-A) measurement with either the 4192A or a Network Analyzer using the input configurations shown in Figure 3-8, the measurement results are the same but those of an absolute amplitude (A/B) measurement may differ. This is because the 4192A uses a passive (2-resistor) power splitter and the Network Analyzer uses an active power splitter.

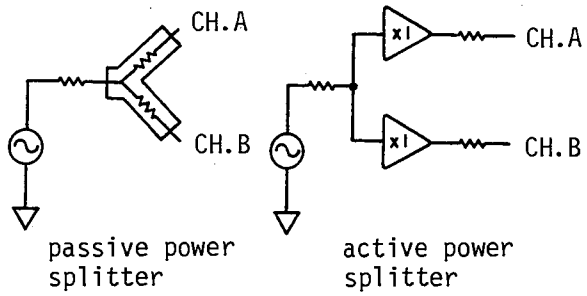


**Table 3-9. BNC Cables**

| Part No. | Cable |
|---|---|
| 8120-1838 | 30cm BNC (male)-BNC (male) Double-Shield Cable (two 8120-1838's are furnished with the 4192A) |
| 8120-1839 | 60cm BNC (male)-BNC (male) Double-Shield Cable (two 8120-1839's are furnished with the 16097A Accessory Kit) |
| 8120-1840 | 120cm BNC (male)-BNC (male) Double-Shield Cable (two 8120-1840's are furnished with the 16097A Accessory Kit) |

**Table 3-10. Impedance Terminations**

| Model No. | Termination |
|---|---|
| 11048C | 50Ω Feedthrough (two 11048C's are furnished with the 4192A) |
| 11094B | 75Ω Feedthrough (two 11094B's are furnished with the 16097A) |
| 11095A | 600Ω Feedthrough (two 11095A's are furnished with the 16097A) |

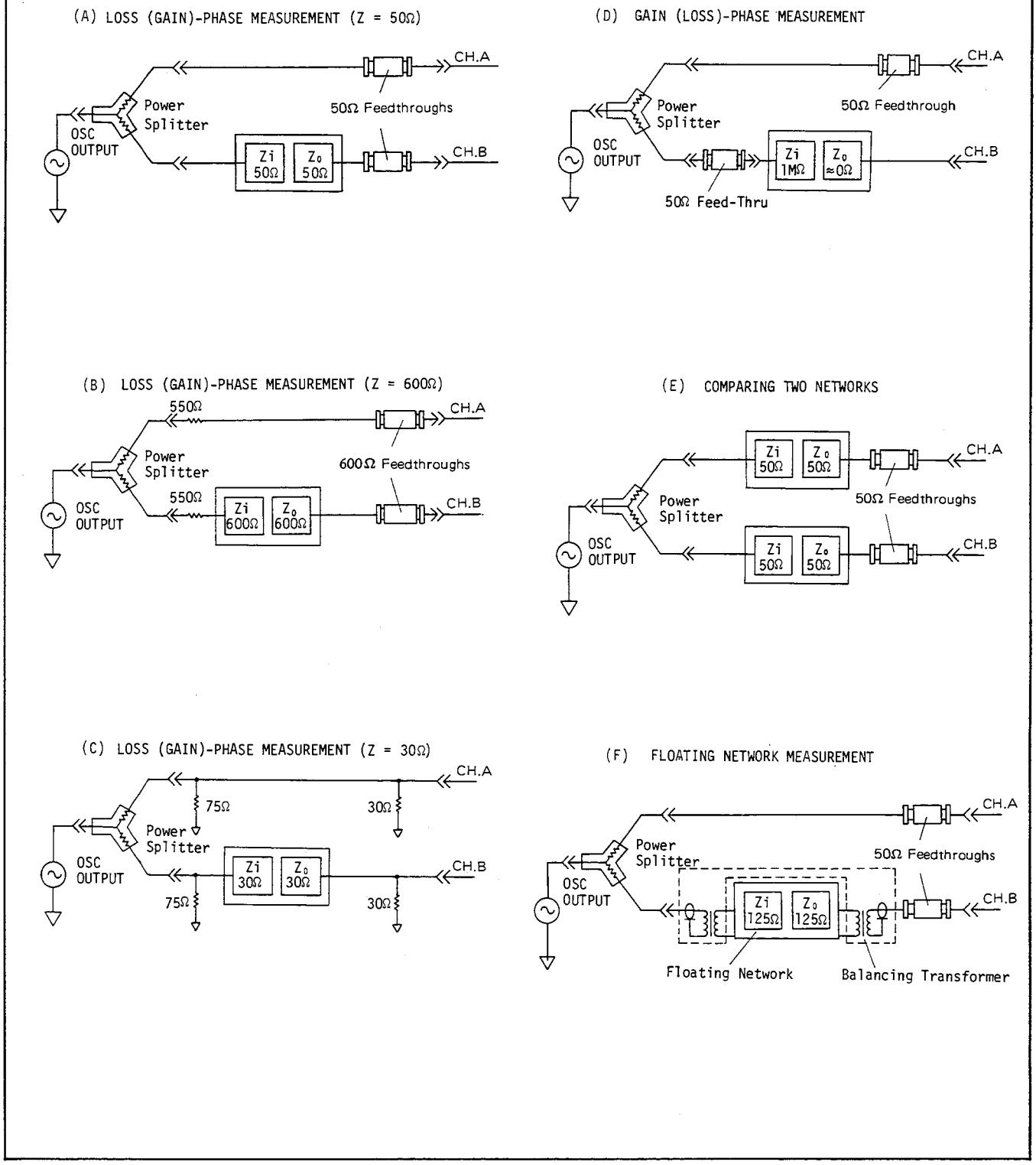


**Figure 3-8. Input Configurations**

### 3-48. Impedance Matching

3-49. In most measurement applications the network under test must be driven and terminated in its characteristics impedance. If the characteristic impedance of the network matches the 50Ω output impedance of the 4192A OSC OUTPUT, the network can be connected directly to the OSC OUTPUT through the power splitter as shown in Figure 3-8 (A). In this case, both the reference input and test input should be terminated with a 50Ω Feedthrough and connected to CHANNEL A and CHANNEL B, respectively.

3-50. If the characteristic impedance of the network is greater than 50Ω, a compensating resistor can be added in series with the OSC OUTPUT between the power splitter and the network to obtain the required output impedance. For example, if the input impedance of the network is 600Ω, a 550Ω resistor can be added in series with the 50Ω output to obtain the required 600Ω as shown in Figure 3-8 (B). Note that the reference input shown in Figure 3-8 (B) also has a compensating resistor to maintain identical impedances in both channels. In this case, both the reference input and test input should be terminated with a 600Ω Feedthrough and connected to CHANNEL A and CHANNEL B respectively.

3-51. If the characteristic impedance of the network is lower than 50Ω, connect a shunting resistor between the power splitter and network to be tested, as across the OSC OUTPUT, to obtain the required output impedance. Otherwise, a shunt resistance of the same value can be connected to CHANNEL A to obtain the same output impedance. The value of shunt resistance is calculated from the following formula:

$$Rs = \frac{50 \times Z}{50 - Z} \ (\Omega)$$

where : Rs = shunt resistance
Z = required output impedance

For example, if the input impedance of the network is 30Ω, a 75Ω shunt resistor can be added in parallel with a 50Ω output to obtain 30Ω as shown in Figure 3-8 (C). Note that the reference input shown in Figure 3-8 (C) also has a shunting resistor to maintain identical impedances in both channels. In this case, both the reference input and test input should be terminated with the 30Ω shunt resistor and connected to CHANNEL A and CHANNEL B, respectively. When driving an impedance lower than 50Ω, a certain amount of insertion loss will be encountered. The amount of loss depends on the type of impedance matching network used and on the various impedance ratios. Whenever a loss is encountered, an equal loss should be introduced in CHANNEL A so that the reference input accurately represents the input of the network. This can be accomplished by placing identical shunt resistances and identical terminations in both channels.

3-52. When the network to be tested has a high input impedance ((1MΩ)) and low output impedance (≈ 0Ω), each channel should be terminated with a 50Ω Feedthrough and then the network can be connected to CHANNEL B as shown in Figure 3-8 (D).

3-53. Deviation measurement from reference network can be performed by inserting the standard network between the power splitter and CHANNEL B. Figure 3-8 (E) shows an input configuration of networks which have 50Ω characteristic impedance. In this case, both the

reference input and test input should be terminated by 50Ω Feedthroughs and connected to CHANNEL A and CHANNEL B, respectively.

3-54. Floating networks can be measured by floating from the measuring circuit using a balancing transformer. Figure 3-8 (F) shows the input configuration of a network which has 125Ω characteristic impedance. In this case, both the reference inpup and test input should be terminated by 50Ω Feedthroughs and connected to CHANNEL A and CHANNEL B, respectively.

### 3-55. Measurement Time

3-56. Table 3-12 shows the measurement times of the 4192A amplitude/phase measurements.

**Table 3-12. Measurement Time for Amplitude/Phase Measurements**

| Measurement Function | Measurement Mode | Measurement Frequency (Hz) | | | |
|---|---|---|---|---|---|
| | | 5 ~ 15 | 15 ~ 150 | 150 ~ 400 | 400 ~ 13M |
| (B–A) – $\theta$ | HIGH SPEED | $\frac{5000}{f}$ + 100.5 ~ $\frac{5000}{f}$ + 114.5 | | | 113 ~ 127 |
| | NORMAL | $\frac{5000}{f}$ + 102 ~ $\frac{5000}{f}$ + 116 | $\frac{15000}{f}$ + 102 ~ $\frac{15000}{f}$ + 116 | 202 ~ 216 | |
| | AVERAGE | $\frac{15000}{f}$ + 102 ~ $\frac{15000}{f}$ + 116 | 1102 ~ 1116 | | |
| (B–A) – GROUP DELAY*1 | HIGH SPEED | $\frac{5000}{f}$ + 412.5 | | 425 | |
| | NORMAL | $\frac{5000}{f}$ + 592 | $\frac{15000}{f}$ + 592 | 692 | |
| | AVERAGE | $\frac{15000}{f}$ + 2399 | 3399 | | |
| A/B (dBm) | HIGH SPEED | $\frac{5000}{f}$ + 77.5 | | | 90 |
| | NORMAL | $\frac{5000}{f}$ + 79 | $\frac{15000}{f}$ + 79 | 179 | |
| | AVERAGE | $\frac{15000}{f}$ + 80 | 1080 | | |
| A/B (dBV) | HIGH SPEED | $\frac{5000}{f}$ + 75.5 | | | 88 |
| | NORMAL | $\frac{5000}{f}$ + 77 | $\frac{15000}{f}$ + 77 | 177 | |
| | AVERAGE | $\frac{15000}{f}$ + 78 | 1078 | | |
| (B – A)*2 | HIGH SPEED | $\frac{5000}{f}$ + 90.5 | | | 103 |
| | NORMAL | $\frac{5000}{f}$ + 92 | $\frac{15000}{f}$ + 92 | 192 | |
| | AVERAGE | $\frac{15000}{f}$ + 92 | 1092 | | |

*1 : At spot frequency measurement (refer to paragraph 3-63).
*2 : Measurement time for B – A measurements can be shortened by changing the setting of an internal control switch (refer to paragraph 3-139).

### 3-57. Test Fixture Characteristics

3-58. Compensation for the error-causing parasitic elements of the test fixtures used in amplitude/phase measurements is described in Figure 3-9. Additional error introduced into amplitude/phase measurements by the 16096A test fixture after compensation is as follows:

B – A error : ± 0.1 dB
Phase error : ± 0.1°
A, B error : ± (0.1 + 0.06F²) dB

where F is the Frequency of the test signal in MHz.

Input impedance of CHANNEL A and CHANNEL B is 1 MΩ, shunted by 30pF.

(1) Cable compensation for the 16096A Test Fixture

a. Connect the 16096A Test Fixture to the UNKNOWN terminals of the 4192A as shown below:

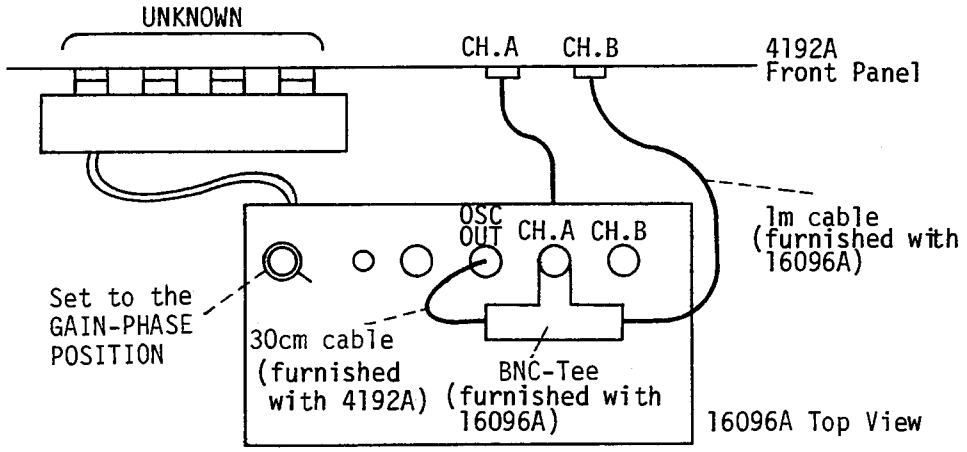


b. Set the 4292A's controls as follows:

DISPLAY A Function ..... B – A (dB)
DISPLAY B Funciton ..... θ (deg)
AVERAGE ..... OFF
HIGH SPEED ..... OFF

**Figure 3-9. Cable Compensation (Sheet 1 of 4)**

SELF TEST ..... OFF
SWEEP ..... MANUAL
TRIGGER ..... INT
Δ/Δ% ..... OFF
SPOT FREQ ..... 1kHz
OSC LEVEL ..... 0.6V

c. Set the selector switch on the 16096A to the GAIN-PHASE position.

d. The value displayed on DISPLAY A should be 20dBV ± 0.02dBV.

e. Set the SPOT FREQ to 1MHz.

f. Adjust CHANNEL A CABLE COMP on the 16096A until the value displayed on DISPLAY A is 20dBV ± 0.1dBV.

g. Reconnect the 16096A as shown below:

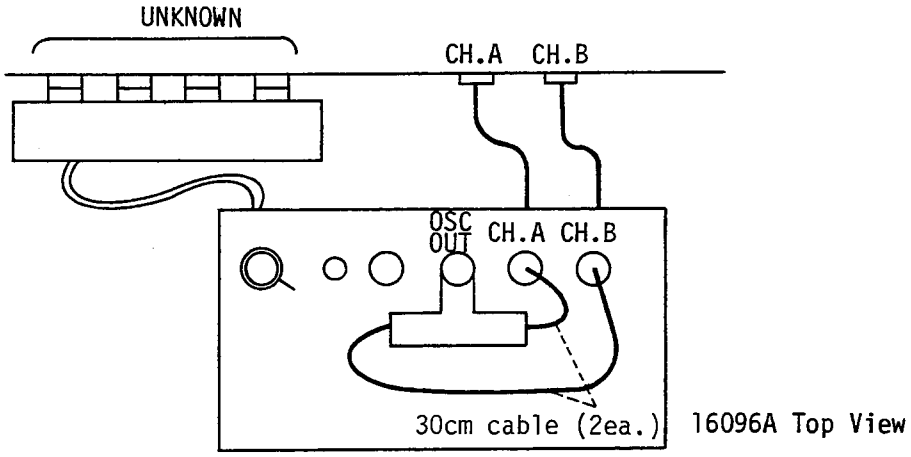


h. Set the SPOT FREQ to 1kHz.

i. The value displayed on DISPLAY A should be 0dBV ± 0.04dBV.

j. Set the SPOT FREQ to 1MHz.

k. Adjust CHANNEL B CABLE COMP on the 16096A until the value displayed on DISPLAY A is 0dBV ± 0.1dBV.

l. Set the SPOT FREQ to 15kHz.

m. The values displayed on DISPLAY A and DISPLAY B should be 0dBV ± 0.1 dBV and 0° ± 0.5°, respectively.

**Figure 3-9. Cable Compensation (Sheet 2 of 4)**

(2) Compensation procedure for the 10006D 10 : 1 Scope Probe

a. Connect the PN 04192-61002 50Ω Feedthrough termination to the OSC OUTPUT terminal of the 4192A.

b. Connect the two 10006D scope probes to CHANNEL A and B and to the 50Ω feedthrough as shown in below.

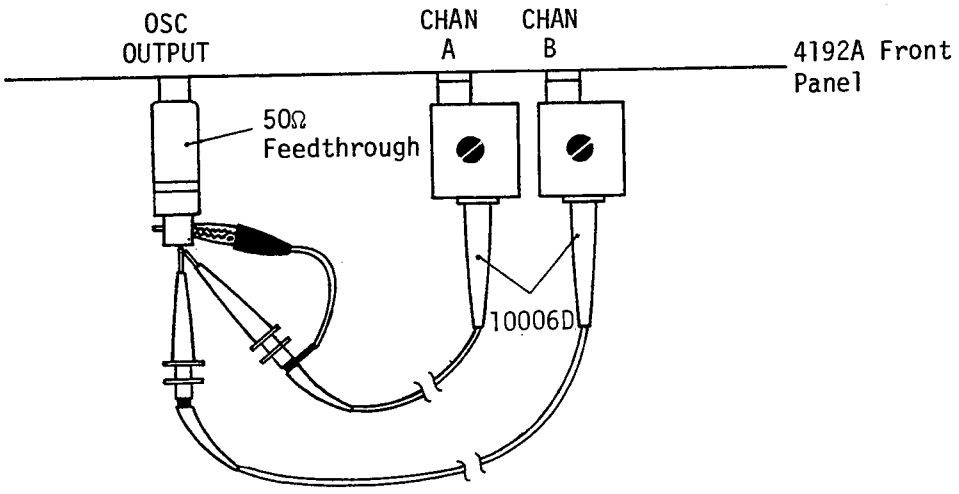


c. Set the 4192A's controls as follows:

| | |
|---|---|
| DISPLAY A Function | A (dBm/dBV) |
| AVERAGE | OFF |
| HIGH SPEED | OFF |
| SELF TEST | OFF |
| SWEEP | MANUAL |
| GAIN MODE | dBV |
| TRIGGER | INT |
| Δ/Δ% | OFF |
| SPOT FREQ | 1 kHz |
| OSC LEVEL | 1 V |

d. Press the BLUE key and the STORE DSPL A/B key.

e. Press DISPLAY A's Δ/Δ% key.

f. Set the SPOT FREQ to 1 MHz.

g. Adjust the cable compensation of the scope probe connected to CHANNEL A until the deviation, displayed on DISPLAY A, is 0.00 dBV.

**Figure 3-9. Cable Compensation (Sheet 3 of 4)**

h. Repeat steps c through g until the amplitude difference between the two measurement values is less than or equal to 0.01 dB.

i. Set the 4192A's controls as follows:

DISPLAY A Function ..... B – A (dB)
DISPLAY B Function ..... $\theta$ (deg)
SPOT FREQ ..... 1 kHz
$\Delta/\Delta\%$ ..... OFF

j. Adjust the cable compensation of the scope probe connected to CHANNEL B until the phase, displayed on DISPLAY B, is 0° ± 0.1°.

k. Set the 4192A's controls as follows:

DISPLAY A Function ..... B (dBm/dBV)
SPOT FREQ ..... 1 MHz

l. The value displayed on DISPLAY A should be −20 dBV ± 0.2 dBV.

*Note: With these adjustments, tracking between CHANNEL A/B will be as follows for the frequency range of 5Hz to 2MHz.*

*Gain tracking : ± 0.2dB*
*Phase tracking : ± 0.2°*

**Figure 3-9. Cable Compensation (Sheet 4 of 4)**

## 3-59. Amplitude/Phase Measurement Operating Instructions

3-60. Basic operating instructions for amplitude/phase measurements are given in Figure 3-10.

(1) Turn On

a. Press the LINE ON/OFF key to turn the 4192A on.

b. Following turn on, the instrument will perform the following operations in the order listed.

① Initial operational check is performed (refer to paragraph 3-7).

② HP-IB address, set by the HP-IB control switch on rear panel (refer to paragraph 3-117), is displayed on DISPLAY A (e.g. H-17).

③ Initial control setting is performed (refer to paragraph 3-9).

c. Confirm that 4192A trigger lamp begins to flash.

d. Press the BLUE key and then the SELF TEST key to check the basic operation of the instrument. Refer to paragraph 3-7 for details on the SELF TEST.

*Note: The 4192A requires a one-hour warm up period to satisfy all specifications listed in Table 1-1.*

(2) Test Fixture Connection

Connect the desired test fixture. Refer to paragraphs 3-46 and 3-48 for Input Configuration and Impedance Matching, respectively.

*Note: When the 16096A Test Fixture or 10013A 10 : 1 Scope Probe is used, error compensation, described in Figure 3-9, must be performed.*

(3) Setting Measurement Condition

a. Select the desired DISPLAY A parameter by pressing the ⇧ or ⇩ (up-down) key. The indicator lamp adjacent to the selected parameter will come on (refer to paragraph 3-38).

b. If necessary, select the desired DISPLAY B parameter (compatible with the DISPLAY A parameter selected in step a by pressing the ⇩ key (refer to paragraph 3-38).

c. When DISPLAY A function is set to A (dBm/dBV) or B (dBm/dBV), select the desired GAIN MODE: dBm or dBV.

*Note: GAIN MODE, dBm or dBV, is specified from the following equations:*

$$dBm = 20 \log_{10} V + 13.01$$
$$dBV = 20 \log_{10} V$$

The relationship between input voltage (Vrms) and dBm/dBV is shown in the graph below.

**Figure 3-10. Operating Instructions for Amplitude — Phase Measurements (Sheet 1 of 2)**

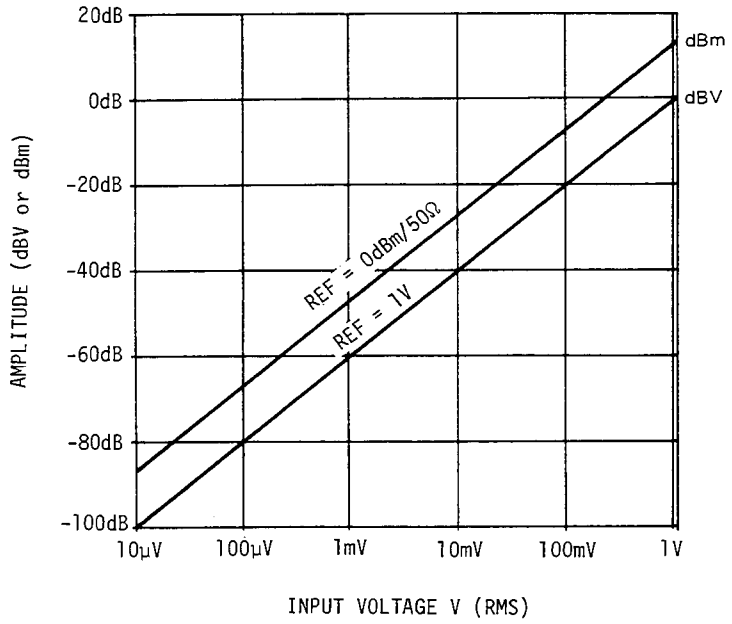


d. Press SPOT FREQ key.
Set the desired spot frequency (initial setting value is 100kHz) with the DATA input keys (refer to paragraph 3-29) and press the appropriate ENTER key.

(Example) Spot frequency = 7.5MHz

Key strokes : SPOT FREQ/BIAS [0] [7] [.] [5] MHz V

The spot frequency setting, 7500.000kHz, is displayed on DISPLAY C (Test Parameter Data Display).

e. Press the OSC LEVEL key.
Set the desired measuring signal level (initial setting value is 1V) with the DATA input keys (refer to paragraph 3-24) and press the appropriate ENTER key.

(Example) OSC level = 750mV

Key strokes : OSC LEVEL [0] [7] [5] [0] kHz mV

The OSC level setting, 0.750V, is displayed on DISPLAY C.

(4) Connecting a Network

a. Connect the network to be tested between CHANNEL B and the power splitter with the test fixture.

*Note: When comparing two networks, the reference network should be connected between the power splitter and CHANNEL A.*

b. The 4192A will automatically display the measured values of the network to be tested in acordance with the measurement conditions.

**Figure 3-10. Operating Instructions for Amplitude — Phase Measurements (Sheet 2 of 2)**

CAUTION

When making amplitude/phase measurements on an active circuit (e.g., amplifier, active filter, etc.), DO NOT allow a dc bias voltage exceeding ±10V to be applied to the OSC OUTPUT terminal. To do so may damage the instrument. When the dc bias voltage of the circuit under test is higher than ±10V, but not more than ±35V, connect a 2.2μF (or less) capacitor in series with the OSC OUTPUT terminal to block the dc bias voltage. This blocking capacitor can be connected to the SHORT/EXTERNAL CAP terminal of the 16096A Test Fixture instead of the short-connector. When the blocking capacitor is used, however, the output impedance of the OSC OUTPUT is increased at low test frequencies, as shown graphically below, and the oscillator level is reduced.
If a suitable capacitor is not available from conventional sources, order HP Part No.: 0160-0128; 2.2μF, 50V.

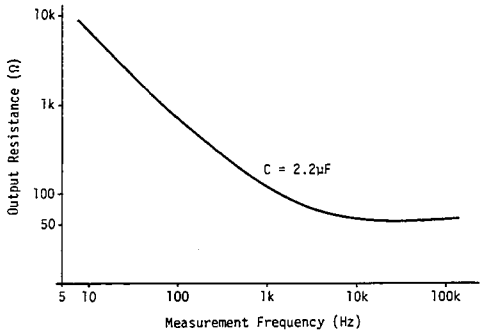


NEVER apply a dc voltage exceeding ±35V to the OSC OUTPUT terminal, even if the blocking capacitor is used.

**Figure 3-10. Operating Instructions for Amplitude — Phase Measurement (Sheet 3 of 3)**

## 3-61. Swept Frequency Measurements

3-62. Basic operating instructions for swept-frequency amplitude/phase measurements are given in Figure 3-11.

*Note: Before proceeding with the procedure given below set the 4192A's controls as necessary for an amplitude/phase measurement. Refer to Figure 3-10.*

(1) Setting Sweep Parameters

a. Press the START FREQ key. Set the start (lower limit) frequency (initial setting is 5Hz) of the desired sweep frequency range with the DATA input keys (refer to paragraph 3-24) and press the appropriate ENTER key.

(Example) Start frequency = 10kHz

Key strokes : START FREQ/BIAS [0] [1] [0] kHz mV

The start frequency setting, 10.00000kHz, is displayed on DISPLAY C (Test Parameter Data Display).

**Figure 3-11. Operating Instructions for Swept — Frequency Amplitude — Phase Measurements (Sheet 1 of 4)**

b. Press the STOP FREQ key. Set the stop (upper limit) frequency (initial setting is 13MHz) of the desired sweep frequency range with the DATA input keys (refer to paragraph 3-24) and press the appropriate ENTER key.

(Example) Stop frequency = 1MHz

Key strokes : SPOT FREQ/BIAS [0] [1] MHz V

The stop frequency setting, 1000.000kHz, is displayed on DISPLAY C.

*Note: The stop frequency should be set to a value higher than the start frequency. If not, error-code E-03 will be displayed on DISPLAY C when swept measurement is attempted and measurement will be not performed.*

c. Press the STEP FREQ key. Set the desired step frequency (initial setting is 1kHz) with the DATA input keys (refer to paragraph 3-24) and press the appropriate ENTER key.

(Example) Step frequency = 1kHz

Key strokes : STEP FREQ/BIAS [0] [1] kHz mV

The step frequency setting, 1.000000kHz, is displayed on DISPLAY C.

*Note: In LOG SWEEP measurement applications, STEP FREQ. has no meaning. To set the instrument to logarithmic sweep mode, press the BLUE key and the LOG SWEEP key; the indicator lamp will come on. In this mode, automatic or manual sweeps are made at twenty frequency steps per decade. Each step is calculated from the following formula:*

$$F \times 10^{0.05N}$$

*where F is the start frequency (5Hz, 10Hz, 100Hz, 1kHz, 10kHz, 100kHz, 1MHz, or 10MHz) and N is an integer that represents the step number. For example, if the start frequency is 100kHz and the stop frequency is 1MHz, the sweep will be as follows:*

| | | | | | | | |
|---|---|---|---|---|---|---|---|
| 1 | 112.2018kHz | 6 | 199.5262kHz | 11 | 354.8133kHz | 16 | 630.9573kHz |
| 2 | 125.8925kHz | 7 | 223.8721kHz | 12 | 398.1071kHz | 17 | 707.9457kHz |
| 3 | 141.2537kHz | 8 | 251.1886kHz | 13 | 446.6835kHz | 18 | 794.3282kHz |
| 4 | 158.4893kHz | 9 | 281.8382kHz | 14 | 501.1872kHz | 19 | 891.2509kHz |
| 5 | 177.8279kHz | 10 | 316.2277kHz | 15 | 562.3413kHz | 20 | 1000.000kHz |

*The start and stop frequencies, which determine the sweep range, are limited to decade values (10, 100, 1k, 10k, 100k, 1M, 10M). If, for example, the start frequency is set to 50kHz and the stop frequency is set to 800kHz, the instrument automatically sets the sweep range as 10kHz to 1MHz. There are, however, two exceptions: (1) when the start frequency is set to a value below 10Hz and (2) when the stop frequency is set to a value above 10MHz. In such cases, the instrument automatically assumes a start frequency of 5Hz and a stop frequency of 13MHz.*

**Figure 3-11. Operating Instructions for Swept – Frequency Amplitude – Phase Measurements (Sheet 2 of 4)**

(2) Manual Sweep

In manual sweeps, the sweep begins at the spot frequency, and the sweep range is determined by the start and stop frequencies.

a. Set the desired spot frequency (initial setting is 100kHz) with the DATA input keys (refer to paragraph 3-24) and press the appropriate ENTER key.

(Example) Spot frequency = 10kHz

Key strokes : [SPOT FREQ/BIAS] [0] [1] [0] [kHz mV]

The spot frequency, 10.00000kHz, will be displayed on DISPLAY C.

b. Press the STEP UP [⇧] key or STEP DOWN [⇩] key to shift the frequency one step (determined by the step frequency setting) in the indicated direction.

*Notes: 1. In logarithmic sweep mode, the measurement frequency is automatically shifted to the nearest frequency that satisfies the equation* $F \times 10^{0.05N} = Fm$*; where* F *is the start frequency,* Fm *is the measurement frequency, and* N *is an integer that represents the step number.*

*2. If the spot frequency is set to a value that is greater than the stop frequency or less than the the start frequency, error-code E-04 will be displayed on DISPLAY C and the measurement will not be performed.*

c. Pressing and holding the STEP UP ( [⇧] ) key or STEP DOWN ( [⇩] ) key continuously advances swept frequency measurement.

d. When X10 STEP key is pressed simultaneously with the STEP UP ( [⇧] ) or STEP DOWN ( [⇩] ) key, the step frequency increases by a factor of ten. (This is for linear sweeps only.)

(3) Auto Sweep

a. Press MAN/AUTO key to set to auto sweep mode (the indicator lamp comes on.)

b. (1) Pressing the START UP ( [⇧] ) key starts the frequency sweep from the programmed start frequency. The frequency sweep ends at the stop frequency.

(2) Pressing the START DOWN ( [⇩] ) key starts the frequency sweep from the stop frequency. The frequency sweep ends at the start frequency.

*Note: Swept test frequency is displayed on DISPLAY C.*

c. To temporarily stop a swept frequency measurement, press the PAUSE key. Start frequency, stop frequency, step frequency, sweep direction, and sweep mode (linear or logarithmic, auto or manual) can be changed when the PAUSE function is set. To restart the sweep, press the START UP ( [⇧] ) key or START DOWN ( [⇩] ) key.

d. Auto sweep measurement mode is automatically released when the swept measurement ends (reaches the stop frequency or start frequency). To stop the sweep before the measurement is completed, press BLUE key and then press the SWEEP ABORT key.

Key strokes : [Blue] [SWEEP ABORT]

To return to normal spot frequency measurement, press the SWEEP AUTO key (indicator lamp goes off).

**Figure 3-11. Operating Instructions for Swept – Frequency Amplitude – Phase Measurements (Sheet 3 of 4)**

Note : When a swept frequency measurement is made, if the sweep comes to a frequency band which has lower frequency resolution than the STEP FREQ., this STEP FREQ. automatically changes to the next higher resolution frequency, and the sweep continues. In special cases for group delay measurement, E-10 appears on DISPLAY C and the sweep stops.

**Figure 3-11. Operating Instructions for Swept – Frequency Amplitude – Phase Measurements (Sheet 3 of 4)**

## 3-63. Group Delay Measurement

3-64. The 4192A can measure group delay at a spot frequency or swept frequency. Figure 3-12 shows a group delay measurement at a spot frequency.

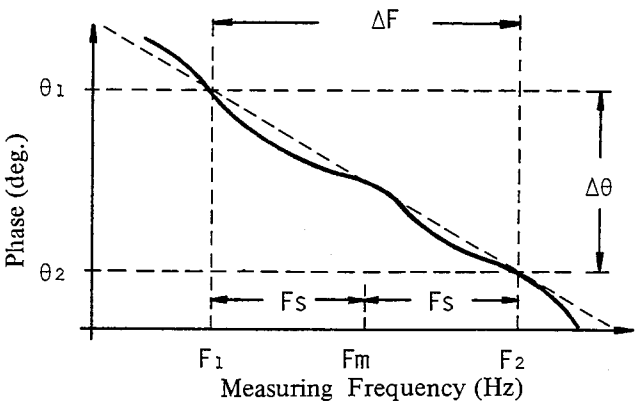


where Fm : Spot frequency (Hz)
Fs : Step frequency (Hz)
$F_1$ : First measuring frequency (Hz)
$F_2$ : Second measuring frequency (Hz)
$\Delta F$ : $F_2 - F_1$ (= 2 Fs)
$\theta_1$ : Phase (deg) at first measuring frequency
$\theta_2$ : Phase (deg) at second measuring frequency
$\Delta\theta$ : $\theta_1 - \theta_2$

(1) Fm and Fs are the 4192A SPOT FREQ and STEP FREQ respectively.

(2) $\theta_1$ is measured at $F_1$ (= Fm - Fs).

(3) $\theta_2$ is measured at $F_2$ (= Fm + Fs).

(4) $\tau_g$ (Group Delay) at Fm is calculated from the following formula and displayed with B – A at Fm.

$$\tau_g = \frac{\Delta\theta}{360 \cdot \Delta F}$$

Note : When a swept frequency measurement is made, if the sweep comes to a frequency band which has lower frequency resolution than the STEP FREQ., E-10 appears on DISPLAY C and the sweep stops.
However, when using HP-IB function, the sweep is made by the controller to set SPOT FREQ., this error message does not appear and then STEP FREQ. automatically changes to the next higher resolution frequency in that frequency band and the sweep continues.

**Figure 3-12. Group Delay Measurement at Spot Frequency**

3-65. Figure 3-13 shows a swept group delay measurement.

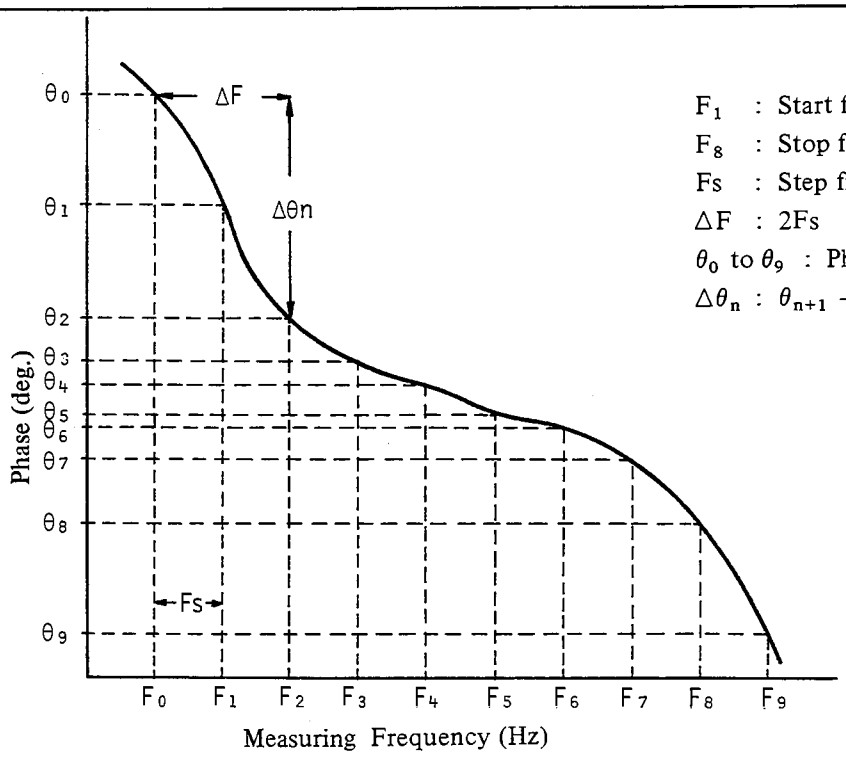


$F_1$ : Start frequency (Hz)
$F_8$ : Stop frequency (Hz)
Fs : Step frequency (Hz)
$\Delta F$ : 2Fs
$\theta_0$ to $\theta_9$ : Phase (deg) at $F_0$ to $F_9$
$\Delta\theta_n$ : $\theta_{n+1} - \theta_{n-1}$ where n = 1 to 8

(1) $F_1$, $F_8$, and Fs are the 4192A START FREQ, STOP FREQ, and STEP FREQ, respectively.

(2) Measuring frequency is swept from $F_0$ (= $F_1$ - Fs) to $F_9$ (= $F_8$ + Fs), and $\theta_0$ to $\theta_9$ are measured at $F_0$ to $F_9$.

(3) $\tau_{gn}$ (Group Delay) at Fn (n : 1 to 8) are calculated from the following formula and displayed with B – A at Fn.

$$\tau_{gn} = \frac{\Delta\theta_n}{360 \cdot \Delta F}$$

**Figure 3-13. Group Delay Measurement on Swept Frequency**

3-66. Measurement ranges and resolution of the group delay measurements are determined automatically by ΔF (STEP FREQ X2) and Δθ.

In the graph shown below, the solid line (—) represents the boundary for resolution and the dashed line (---) represents the boundary for F (STED FREQ x 2). For example, it F = 1KHz and Δθ = 1 deg, measurement is made at the 1Ωs range with 10ns resolution.

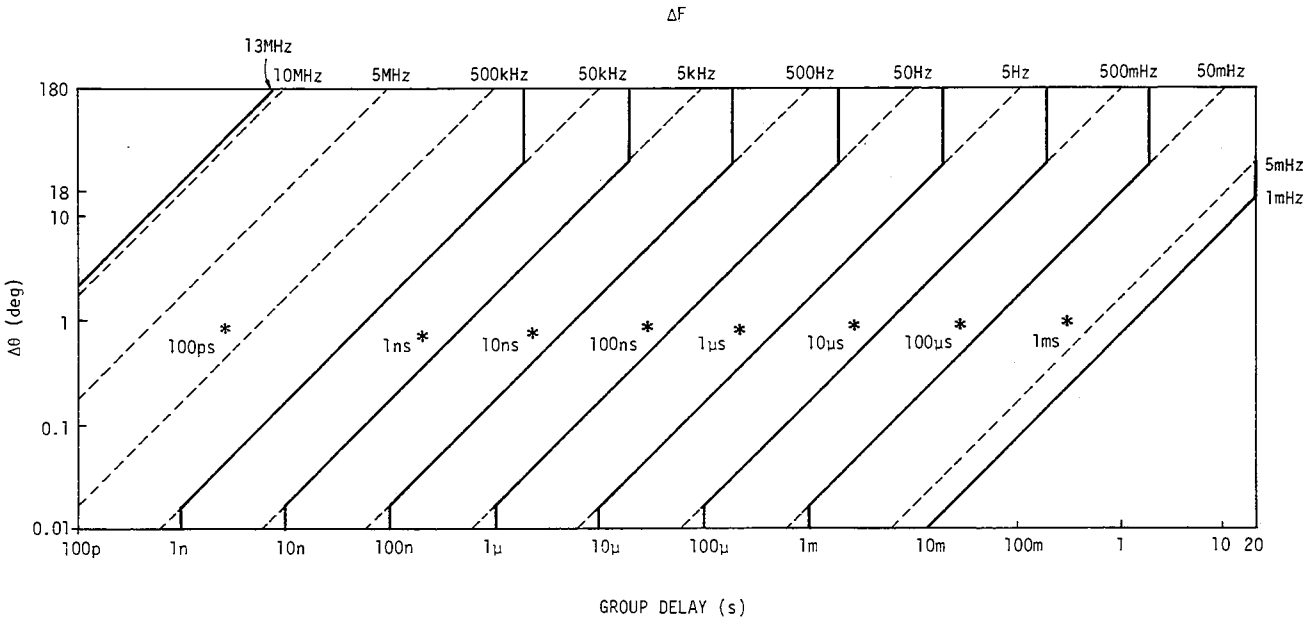


* Resolution

Note

If the DUT causes a large group delay, the 4192A will measure the group delay time before the DUT has settled, after a frequency change. The table below lists the maximum group delay time that can be measured by the 4192A in each measurement mode at 80%, 90% and 100% settled.

| Measurement Mode | 80% | 90% | 100% |
|---|---|---|---|
| AVERAGE | 155ms/174ms | 109ms/122ms | 36ms/41ms |
| NORMAL (50Hz)* | 43ms/62ms | 30ms/43ms | 10ms/14ms |
| NORMAL (60Hz)* | 41ms/60ms | 29ms/42ms | 9.6ms/14ms |
| HIGH SPEED | 33ms/51ms | 23ms/36ms | 7.6ms/12ms |
| *Line frequency. (SPOT frequency measurement)/ (Swept frequency measurement) | | | |

**Figure 3-14. Measurement Ranges and Resolution of the Group Delay Measurements**

## 3-67. IMPEDANCE MEASUREMENT

3-68. The 4192A can accurately measure the impedance parameters of a component or circuit at the frequency, test signal level, and dc bias level found in actual-real world-operation.

(1) Measuring Frequency : 5Hz to 13MHz

(2) OSC Level : 5mVrms to 1.1Vrms

(3) DC bias voltage : −35V to +35V

Frequency and bias can be automatically or manually swept, full range, in either direction. OSC level can also be swept (manual only) at 1mV steps (5mV steps at levels above 100mV). The actual test signal voltage across the DUT, or the test signal current through the DUT can be measured.

Instructions for impedance meansurements are given in paragraphs 3-69 through 3-108.

### 3-69. Measurement Functions

3-70. The 4192A simultaneously measures two independent, complementary impedance parameters in each measurement cycle. This combination of measurement parameters represents both the resistive and reactive characteristics of the sample. A total of fourteen measurement parameters (two are duplicates) make up the twelve selectable parameter combinations. These measurement functions are classified, for display purpose, into two groups: DISPLAY A and DISPLAY B functions, as given in Table 3-13. DISPLAY A function group comprises the primary measurement parameters and measured values are displayed on DISPLAY A. DISPLAY B functions include a group of subordinate parameters, the availability of which are partially dependent on the primary function. Selected and measured values are displayed on DISPLAY B. Selectable combinations of DISPLAY A and DISPLAY B functions are listed in Table 3-13. Measurement parameters separated by a slash (/) in Table 3-13 are for equivalent series circuit () (left of slash) or equivalent parallel circuit ( ) (right of slash). Refer to paragraph 3-73 for details. The 4192A measures R + jX (impedance) in equivalent series circuit mode and G + jB (admittance) in equivalent parallel circuit mode. Other impedance parameters are calculated from R + jX or G + jB with the equations given in Table 3-14. Measurement results can be displayed as either deviation or percent deviation from stored reference values. Deviation measurements are described in paragraph 3-26.

**Table 3-13. DISPLAY A/B Functions for Impedance Measurements**

| DISPLAY A Function | | DISPLAY B Function | |
|---|---|---|---|
| \|Z\| / \|Y\| | Absolute Impedance/Absolute Admittance | $\theta$ (deg)<br>$\theta$ (rad) | Phase Angle in degrees<br>Phase Angle in radians |
| R/G | Resistance/Conductance | X/B | Reactance/Susceptance |
| L<br>C | Inductance<br>Capacitance | Q | Quality Factor |
| | | D | Dissipation Factor |
| | | R/G | Resistance/Conductance |

**Table 3-14. Measurement Parameter Formulas for Impedance Measurement**

| Measurement Parameter | Measurement Equivalent Circuit | |
|---|---|---|
| \|Z\| | $\sqrt{R^2 + X^2}$ | |
| \|Y\| | | $\sqrt{G^2 + B^2}$ |
| $\theta$ | $\tan^{-1}\left(\frac{X}{R}\right)$ | $\tan^{-1}\left(\frac{B}{G}\right)$ |
| L | $\frac{X}{\omega}$ | $-\frac{1}{\omega B}$ |
| C | $-\frac{1}{\omega X}$ | $\frac{B}{\omega}$ |
| Q | $\frac{\lvert X \rvert}{R}$ | $\frac{\lvert B \rvert}{G}$ |
| D | $\frac{R}{\lvert X \rvert}$ | $\frac{G}{\lvert B \rvert}$ |

### 3-71. Measurement Range

3-72. The 4192A has two measurement range modes: AUTO and MANUAL. The mode is set by the ZY RANGE keys on the front-panel. When DISPLAY A function is set to |Z|/|Y| in AUTO range mode, ranging depends on the impedance, |Z|, or the admittance, |Y|, of the DUT. When L or C is selected, ranging depends on the displayed value. |Z| and |Y| ranges and resolution are listed in Table 3-15.

When ZY RANGE is set to AUTO, the optimum range is automatically selected. If the internal measurement circuit is saturated or the measured value exceeds the upper limit of the range (130% of full scale), the next higher range is automatically selected. If the measured value is less than the range's lower limit (11% of full scale), the next lower range is automatically selected.

When ZY RANGE is set to MANUAL, the measurement range will not change even if the measured value of the DUT changes. If the ZY RANGE down ( ⇩ ) key or up ( ⇧ ) key is pressed, the measurement range is changed one decade in the indicated direction. If the

**Table 3-15. ZY RANGE**

| ZY RANGE | \|Z\| | | \|Y\| | |
|---|---|---|---|---|
| | Measurement Range | Resolution | Measurement Range | Resolution |
| 1Ω/10S | 0.0001Ω ~1.2999Ω | 0.1mΩ | 0.01S ~12.99S | 10mS |
| 10Ω/1S | 0.001Ω ~12.999Ω | 1mΩ | 0.0001S ~1.2999S | 100μS |
| 100Ω/100mS | 0.01Ω ~129.99Ω | 10mΩ | 0.01mS ~129.99mS | 10μS |
| 1kΩ/10mS | 0.0001kΩ ~1.2999kΩ | 100mΩ | 0.001mS ~12.999mS | 1μS |
| 10kΩ/1mS | 0.001kΩ ~12.999kΩ | 1Ω | 0.0001mS ~1.2999mS | 100nS |
| 100kΩ/100μS | 0.01kΩ ~129.99kΩ | 10Ω | 0.01μS ~129.99μS | 10nS |
| 1MΩ/10μS | 0.0001MΩ ~1.2999MΩ | 100Ω | 0.001μS ~12.999μS | 1nS |

internal measurement circuit is saturated, UCL will be displayed on DISPLAY A; if the measured value exceeds the upper limit of the range (130% of full scale), OF1 will be displayed on DISPLAY A.

The time required for a range change is between 35ms and 40ms at frequencies above 400Hz. Figure 3-15 shows the number of display digits for |Z| and |Y| measurements. (The number of display digits depends on the test frequency, OSC level, and ZY RANGE.) Measurement range for each of the other parameters is discussed below.

(1) R/G/X/B:
The measurement ranges, resolution, and number of display digits for R (resistance) and X (reactance) are the same as those for |Z| and are given in Table 3-15 and Figure 3-15. Likewise, measurement ranges, resolution, and number of display digits for G (conductance) and B (susceptance) are the same as those for |Y|. However, the upper limit of X/B and DISPLAY B R/G is 200% of full scale and the lower limit is 18% of full scale.

(2) L/C:
The measurement ranges, resolution, and number of display digits for L (inductance)and C (capacitance) depends on the test frequency and the ZY RANGE (see Figure 3-16). The upper limit for L and C is 200% of full scale and the lower limit is 18% of full scale.

(3) $\theta$/Q/D:
The measurement ranges and resolution for $\theta$ (phase angle), Q (quality factor) and D (dissipation factor) are given in Table 3-16. Number of display digits for $\theta$, Q, and D are the same as that for |Z| and |Y| (see Figure 3-15). When the measured value of |Z| or |Y| is less than 5% of full scale, $\theta$, Q, and D measurement cannot be made and − − − is displayed on DISPLAY B.

The measurement ranges for these parameters are selected automatically. If the measued value exceeds the limit of the display, OF2 will be displayed on the corresponding display.

**Table 3-16. Measurement Range of $\theta$/Q/D**

| Measurement Parameter | Measurement Range | Resolution |
|---|---|---|
| $\theta$ (deg) | 0° ~± 180° | 0.01° |
| $\theta$ (rad) | $-\pi \sim -1.000$ | 0.001 |
| | $-1.0000 \sim +1.0000$ | 0.0001 |
| | $+1.000 \sim +\pi$ | 0.001 |
| Q | 0 ~ 1999.9 | 0.1 |
| D | 0 ~ 1.9999 | 0.0001 |
| | 2.000 ~ 19.999 | 0.001 |

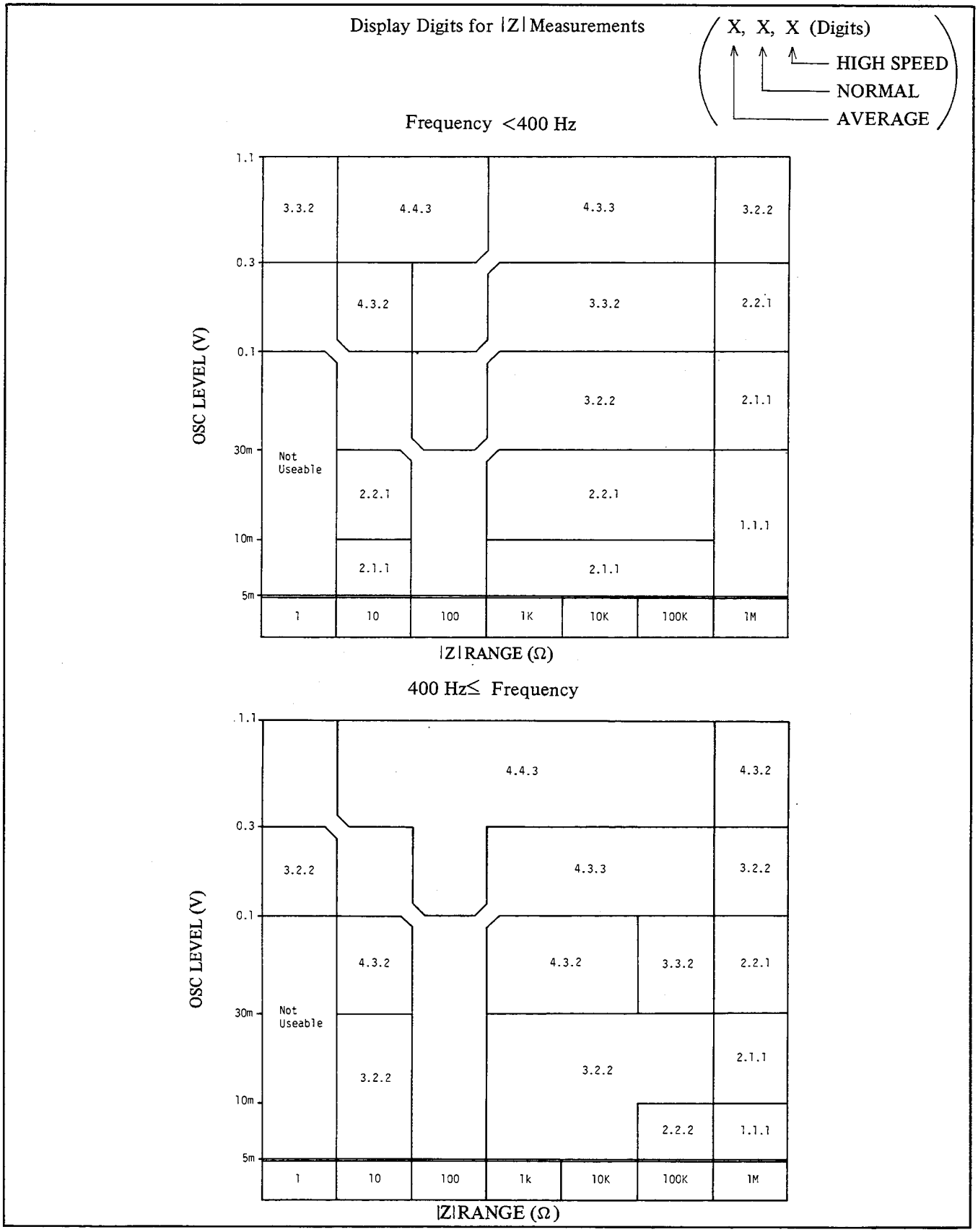


**Figure 3-15. Display Digits for |Z|/|Y| Measurements (sheet 1 of 2)**

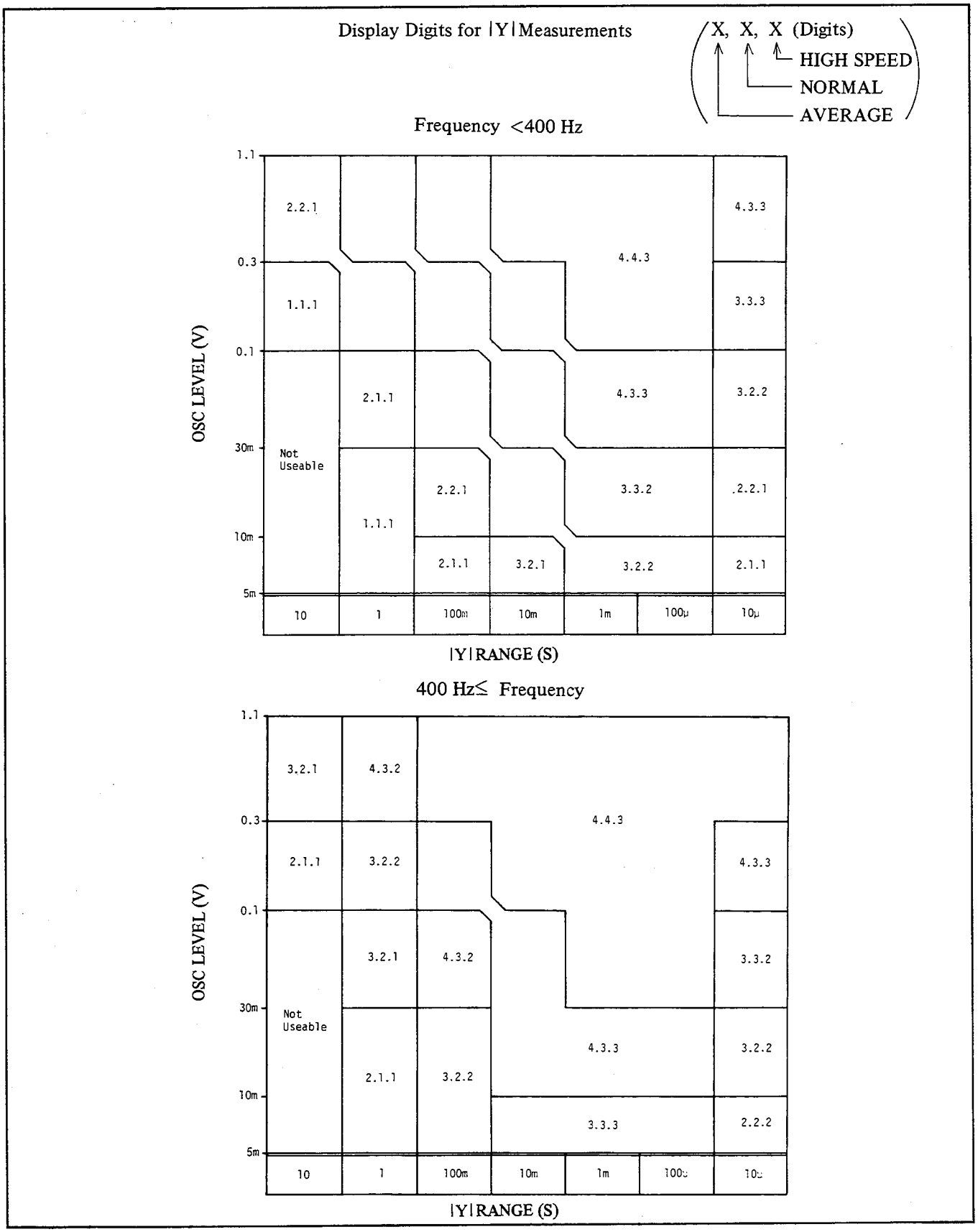


**Figure 3-15. Display Digits for |Z|/|Y| Measurements (sheet 2 of 2)**

Measurement Ranges, Resolution, and Display Digits for L Measurements (Specified by |Z| RANGE).

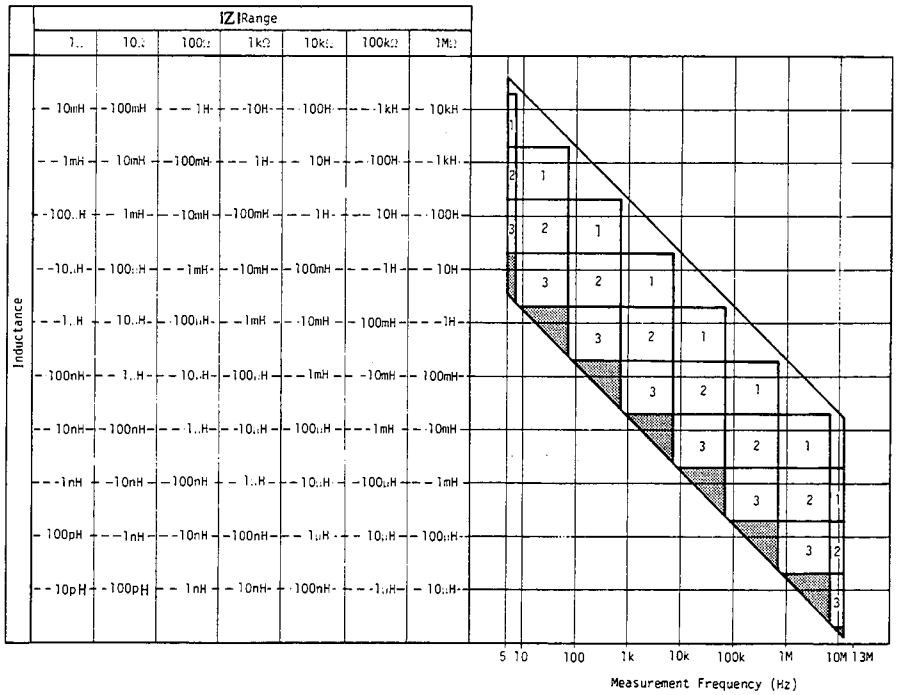


Measurement Ranges, Resolution, and Display Digits for C Measurements (Specified by |Y| RANGE).

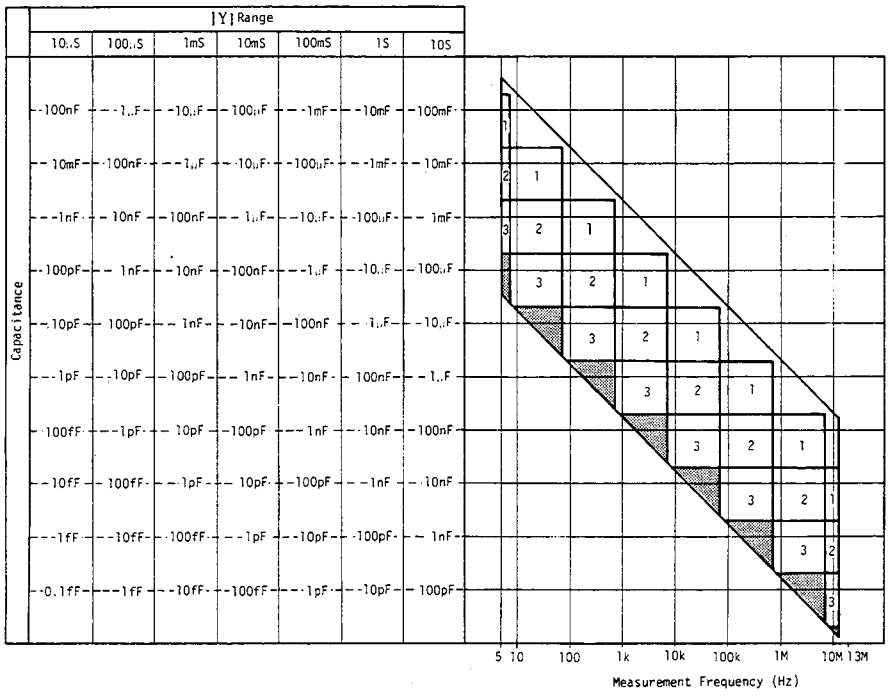


*Note: Display digits for L/C = Display digit of |Z|/|Y| in Figure 3-15 – Number in above figure. Shaded areas indicate that measurement cannot be performed.*

**Figure 3-16. Measurement Ranges, Resolution and Display Digits for L/C Measurements.**

### 3-73. Circuit Mode

3-74. An impedance element can be represented by a simple series or parallel equivalent circuit comprised of resistive and reactive elements. This representation is possible by either of the (series or parallel) equivalents because both have identical impedances at the selected measurement frequency by properly establishing the values of the equivalent circuit elements. The equivalent circuit to be measured is selected by setting the CIRCUIT MODE control. When the CIRCUIT MODE is set to AUTO, the 4192A will automatically select either parallel or series equivalent circuit mode as appropriate for the ZY RANGE as shown in Figure 3-17. In the figure, the CIRCUIT MODE does not change at 100Ω/100mS to 10kΩ/1mS (measurement can be performed not only in equivalent series circuit [ ] mode but equivalent parallel circuit [ ] mode as well). By setting CIRCUIT MODE manually, either of the circuit modes is useable at all measurement ranges.

As already stated, the 4192A measures R + jX (impedance) when the CIRCUIT MODE is set to equivalent series circuit and G + jB (admittance) when the CIRCUIT MODE is set to equivalent parallel circuit. Other impedance parameters are calculated from these measured values with the equations given in Table 3-14. |Z| and |Y| are not related to the CIRCUIT MODE. However, |Z| is selected when the CIRCUIT MODE is set to AUTO or and |Y| is selected when the CIRCUIT MODE is set to . Capacitance and inductance measurements can be performed in not only equivalent series circuit ( ) mode but also equivalent parallel circuit ( ). However, measured values in both modes are different. The difference in measued values is related to the loss factor of the sample to be measured. When the conditions for the following equations are satisfied, the parallel and series circuits have equal impedance (at a particular frequency point).

$$G + jB = \frac{1}{R + jX}$$

$$= \frac{R - jX}{R^2 + X^2}$$

Expanding the above equation, we have

$$G + j\omega Cp = \frac{R + \frac{j}{\omega Cs}}{R^2 + \frac{1}{\omega^2 Cs^2}}$$

where, $Cs \left(= -\frac{1}{\omega X}\right)$ : equivalent series circuit capacitance.

$Cp \left(= \frac{B}{\omega}\right)$ : equivalent parallel circuit capacitance.

Obviously, if no series resistance (R) and parallel conductance (G) are present, the equivalent series circuit capacitance (Cs) and equivalent parallel circuit capacitance (Cp) are identical. Likewise, if R and G are not present, the equivalent series circuit inductance (Ls) and equivalent parallel inductance (Lp) are identical.

However, a sample value measured in a parallel measurement circuit can be correlated with that of a series circuit by a simple conversion formula which considers the effect of dissipation factor. See Table 3-17. Figure 3-18 graphically shows the relationships of parallel and series parameters for various dissipation factor values. Applicable diagrams and equations are given in the chart. For example, a parallel capacitance (Cp) of 1000pF with a dissipation factor of 0.5 is equivalent to a series capacitance (Cs) of 1250pF with an identical dissipation factor. As shown in Figure 3-18, inductance or capacitance values for parallel and series equivalents are nearly equal when the dissipation factor is less than 0.03. The dissipation factor of a component always has the same

| Measurement Equivalent Circuit | ZY RANGE | | | | | | |
|---|---|---|---|---|---|---|---|
| | 1Ω/10S | 10Ω/1S | 100Ω/100ms | 1kΩ/10mS | 10kΩ/1mS | 100kΩ/100μS | 1MΩ/10μS |
| | ← | ← | ← | ← | → | | |
| | | | ← | ← | ← | ← | → |

Figure 3-17. Auto Changing of the Measurement Equivalent Circuit

**Table 3-17. Dissipation Factor Equations**

| Circuit Mode | | Dissipation Factor | Conversion to Other Modes |
|---|---|---|---|
| C | Cp<br>G | $D = \frac{G}{\omega Cp} = \frac{1}{Q}$ | $Cs = (1 + D^2)\,Cp,\ R = \frac{D^2}{1 + D^2} \cdot \frac{1}{G}$ |
| | Cs R | $D = \omega CsR = \frac{1}{Q}$ | $Cp = \frac{1}{1 + D^2}\,Cs,\quad G = \frac{D^2}{1 + D^2} \cdot \frac{1}{R}$ |
| L | Lp<br>G | $D = \omega LpG = \frac{1}{Q}$ | $Ls = \frac{1}{1 + D^2}\,Lp,\quad R = \frac{D^2}{1 + D^2} \cdot \frac{1}{G}$ |
| | Ls R | $D = \frac{R}{\omega Ls} = \frac{1}{Q}$ | $Lp = (1 + D^2)\,Ls,\quad G = \frac{D^2}{1 + D^2} \cdot \frac{1}{R}$ |

value at a given frequency for both parallel and series equivalents.

In ordinary LCR measuring instruments, the measurement circuit is set (automatically or manually) to a predetermined equivalent circuit with respect to either the selected range or to the dissipation factor value of the sample. The wider circuit mode selection capability of the 4192A, which is free from these restrictions, permits taking measurements in the desired circuit mode and of comparing such measured values directly with those obtained by another instrument. This obviates the inconvenience and necessity of employing instruments capable of taking measurements with the same equivalent circuit to assure measurement result correspondence.

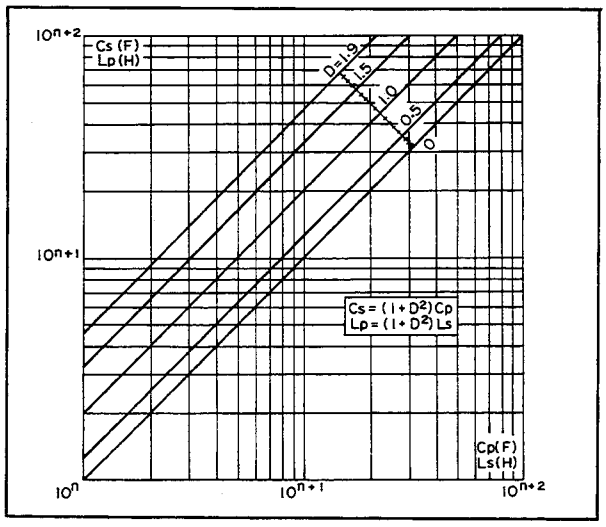


**Figure 3-18. Parallel and Series Parameter Relationship**

## 3-75. Unkown Terminals

3-76. For connecting the sample to be tested, the 4192A employs measurement terminals in a four terminal pair configuration, which has a significant measuring advantage for component parameter measurements requiring high accuracy in the high frequency region. Generally, any mutual inductance, interference of the measurement signals, and unwanted residual factors in the connection method which are incidental to ordinary terminal methods significantly affect the measurement at a high frequency. The four terminal pair configuration measurement permits easy, stable and accurate measurements and avoids the measurement limitations inherent in such effects. To construct this terminal architecture, connection of a sample to the instrument requires the use of a test fixture or test leads in a four terminal pair configuration design.

The UNKNOWN terminals consist of four connectors: High current ($H_{CUR}$), High potential ($H_{POT}$), Low potential ($L_{POT}$) and Low current ($L_{CUR}$). The purpose of the current terminals is to cause a measurement signal current to flow through the sample. The potential terminals are for detecting the voltage drop across the sample. The high side signifies the drive potential (referenced to low side potential) drawn from the internal measurement signal source. To compose a measurement circuit loop in a four terminal pair configuration, the $H_{CUR}$ and $H_{POT}$, $L_{POT}$ and $L_{CUR}$ terminals must be respectively connected together and, in addition, the shields of all conductors must be connected together (as shown in Figure 3-19). Principle of the four terminal configuration measurement is illustrated in Figure 3-20. At first glance, the arrangement appears to be an expanded four terminal

method with a built-in guard structure. This is true. Thus, the four terminal pair method combines the advantages of the four terminal method in low impedance measurements while providing the shielding required for high impedance measurements. The distinctive feature of the four terminal pair configuration is that the outer shield conductor works as the return path for the measurement signal current. The same current flows through both the center conductors and the outer shield conductors (in opposite directions) yet no external magnetic fields are generated around the conductors (the magnetic fields produced by the inner and outer currents completely cancel each other). Because the measurement signal current does not develop an inductive magnetic field, the test leads do not contribute additional measurement errors due to self-or mutual-inductance between the individual leads. Hence, the four terminal pair method enables measurements with best accuracy while minimizing any stray capacitance and residual inductance in the test leads or test fixture.

*Note: If residual inductance does exist in test leads, it affects measurements and the resultant additional measurement error increases in capacitance measurements in proportion to the square of the measurement frequency.*

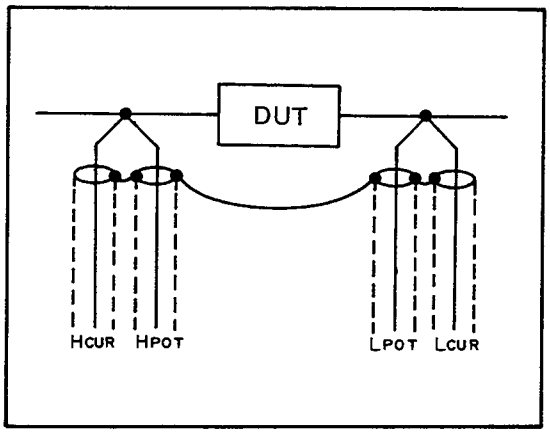


**Figure 3-19. Four Terminal Pair DUT Connections**

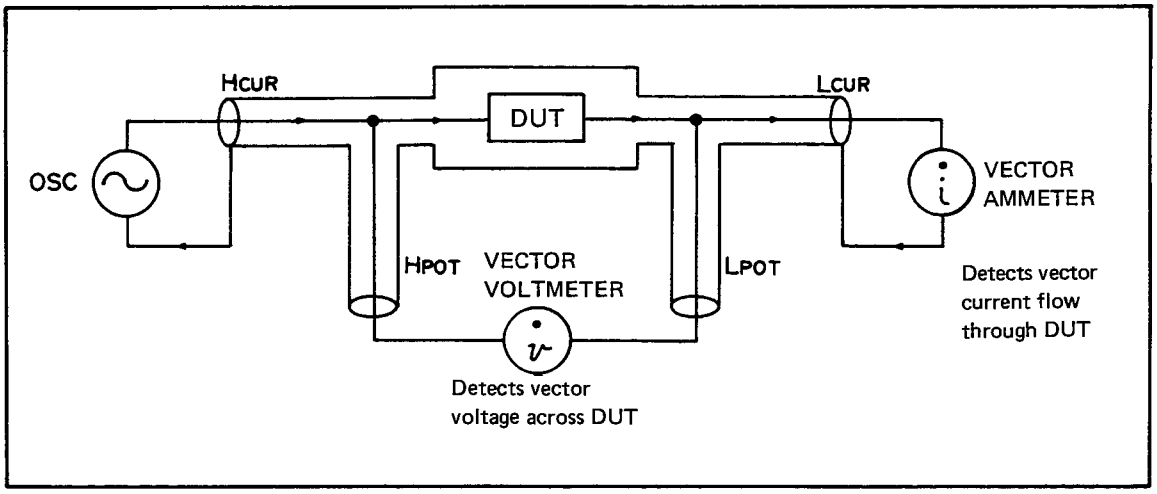


**Figure 3-20. Four Terminal Pair Measurement Principle**

### 3-77. Selection of Test Cable Length

3-78. The propagation signal in a transmission line will develop a change in phase between two points on the line as illustrated in Figure 3-21. The difference in phase corresponds to the ratio of the distance between the two points to the wavelength of the propagating signal. Consequently, owing to their length, test cables for connecting a sample will cause a phase shift and a propagation loss of the test signal. For example, the wavelength of a 13MHz test signal is 23 meters which is 23 times as long as the 1m standard test cables. Here, the phase of the test signal at the end of the test cable will have been shifted by about 15.6 degrees (360° ÷ 23) as referenced to the phase at the other end of the cable. Since the effect of test cables on measurements and the resultant measurement error increase in proportion to the test frequency, cable length must be taken into consideration in high frequency measuremnts. The CABLE LENGTH switch selects measuring circuitry for the 1m standard test cables or for a test fixture attached directly to the UNKNOWN terminals. When standard 1m test cables are used for measurements, the CABLE LENGTH switch is set to the 1m position to properly adapt measuring circuit for the test cables and to minimize additional measurement errors. The 0 position is selected for direct attachment type test fixtures.

*Notes:*

1. *When the HP16047B Test Fixture is used with the 4192A, set CABLE LENGTH switch to 1m position.*
2. *If test cable is longer or shorter than the standard 1m test cable, the additional error contributed is proportional to the square of the frequency. As the characteristic impedance of the test cable is also a factor in the propagation loss and phase shift (and of resultant measurement error), using different type test cables must be avoided. Be sure to use the standard test cables available from Hewlett-Packard.*
3. *To minimize incremental measurement errors at frequencies above 4MHz, convert four terminal pair to three terminal configuration at cable ends by connecting High and Low side cables, respectively, with low impedance straps as illustrated (do not extend cables of four terminal pair). The residual error factors, Lo and Co, are shown in the figure.*

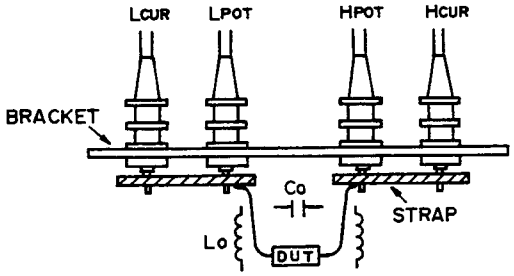


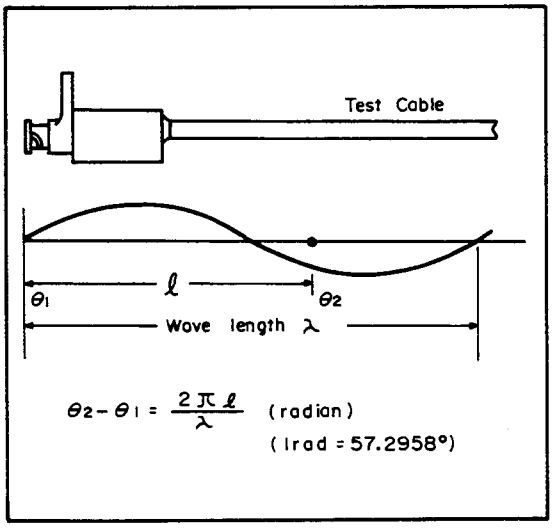


**Figure 3-21. Test Signal Phase on Test Cables**

### 3-79. ZERO Offset Adjustment

3-80. There is no perfect test fixture. They all have parasitic elements that affect measurement accuracy. This is also true of the measurement circuit. To minimize the effect these parasitic elements have on measurements, the 4192A is equipped with an automatic ZERO offset adjustment capability. Refer to Figure 3-30 for the ZERO offset procedure.

3-81. The 4192A measures R ± jX (impedance) in equivalent series circuit mode and G ± jB (admittance) in equivalent parallel circuit mode. All other impedance parameters are calculated from R ± jX or G ± jB (refer to paragraph 3-69). When one of the other impedance parameters is measured (after offset adjustment), compensation is made on the raw measurement data (R ± jX or G ± jB) before conversion into the selected parameter.

(1) ZERO SHORT

All measurement errors are represented as two series residual parameters R + jX as shown in Figure 3-22 and measured values are compensated with following equations.

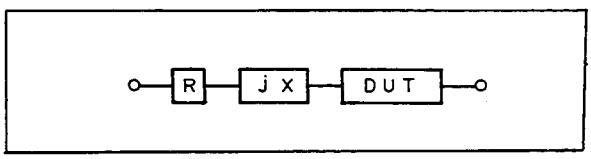


**Figure 3-22. Residual Impedance**

$$Rd = Rm - Rs$$
$$Xd = Xm - Xs$$

where Rd, Xd : Displayed values.
Rm, Xm : Measured values.
Rs, Rs : ZERO SHORT offset data

The 4192A calculates ZERO SHORT offset data at other frequencies using the ZERO SHORT offset data at a particular frequency as shown in Table 3-18 and compensates measured values at other frequencies.

(2) ZERO OPEN

All measurement errors are represented as two parallel stray parameters, G + jB, as shown in Figure 3-23, and measured values are compensated with following equations.

**Table 3-18. ZERO Offset Adjustments**

| Measurement (Hz) | ZERO Offset Adjustments | |
|---|---|---|
| | SHORT | OPEN* |
| 5 ~ 500 | ZERO offset adjustment must be performed at each spot frequency. For example, offset adjustment at 5 Hz is not valid at 6 Hz. | |
| 500 ~ 100k | ZERO SHORT offset at 100kHz is valid for all frequencies from 500 Hz to 100kHz. | ZERO OPEN offset data is automatically recalculated for each frequency within a given frequency range if ZERO OPEN offset is performed at 1 MHz. The equations used for this are as follows:<br>$Gc = Go$<br>$Bc = Bo \times \frac{Fm}{Fo}$<br>$GD = Gm - Gc \quad BD = Bm - Bc$ |
| 100k ~ 1M | ZERO SHORT offset data is automatically recalculated for each frequency within a given frequency range if ZERO SHORT offset is performed at the maximum frequency of that range. The equations used for this are as follows:<br>$Rc = Rs \times \frac{1 \times \sqrt{Fm}}{1 \times \sqrt{Fs}}$<br>$Xc = Xs \times \frac{Fm}{Fs}$<br>$RD = Rm - Rc \quad XD = Xm - Xc$ | |
| 1M ~ 10M | | ZERO OPEN offset data is automatically recalculated for each frequency within a given frequency range if ZERO OPEN offset is performed at the maximum frequency of that range. The equations used for this are the same as those used in the 500 Hz to 1 MHz range. |
| 10M ~ 13M | ZERO SHORT offset data is automatically recalculated for each frequency within a given frequency range if ZERO SHORT offset is performed at 10 MHz. The equations used for this are the same as those used in the 100kHz to 10MHz range. | ZERO OPEN offset data is automatically recalculated for each frequency within a given frequency range if ZERO OPEN offset is performed at 10MHz. The equations used for this are the same as those used in the 500 Hz to 1 MHz range. |

Fm : Measuring frequency (MHz)
Fs : Frequency at which ZERO SHORT offset adjustment is performed (MHz).
Fo : Frequency at which ZERO OPEN offset adjustment is performed (MHz).
Rc, Xc, Gc, Bc : Recalculated offset data
Rs, Xs : ZERO SHORT offset data
Go, Bo : ZERO OPEN offset data
RD, XD, GD, BD : Displayed value of DUT
Rm, Xm, Gm, Gm : Value measured by the 4192A includes offset error.
* : The ZERO OPEN offset adjustment should be performed at each measuring frequency in measurements on grounded devices.

$$Gd = Gm - Go$$
$$Bd = Gm - Bo$$

where Gd, Bd : Displayed Values.
Gm, Bm : Measured Values.
Go, Bo : ZERO OPEN offset data

The 4192A calculates ZERO OPEN offset data at other frequencies using the ZERO OPEN offset data at a particular frequency as shown in Table 3-18 and compensates measured values at the other frequencies.

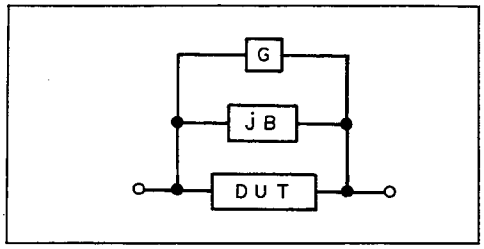


Figure 3-23. Stray Admittance

## 3-82. Actual Measurement Equivalent Circuit

3-83. The measuring circuit used to connect a test sample to the UNKNOWN terminals actually becomes part of the sample which the instrument measures. The four terminal pair configuration measurement employed in the 4192A offers minimum residual impedance in the measuring circuit. However, the four terminal pair measurement system must be converted to a two terminal configuration at/near to the sample because ordinary components have two terminal leads. Moreover, additional stray capacitance appears in the measuring circuit when a sample is connected to the test fixture. Figure 3-24 illustrates such stray capacitances present around the component leads.

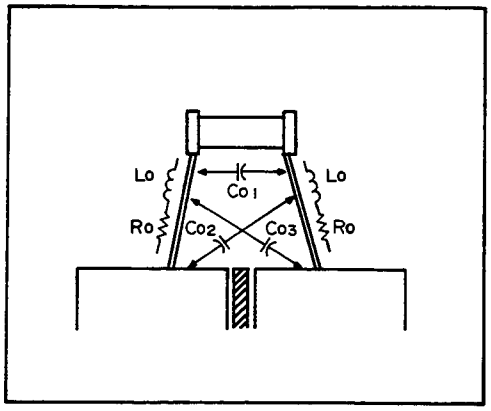


Figure 3-24. Parasitic Elements Incident to DUT Connections

3-84. Diverse parasitic elements existing in the measuring circuit between the unknown device and the measurement terminals will affect measurement results. These undesired parasitic elements are present as resistive and reactive factors in series and conductive and susceptive factors in parallel with the test component. Figure 3-25 shows an equivalent circuit model of the measuring circuit which includes the parasitic elements (usually

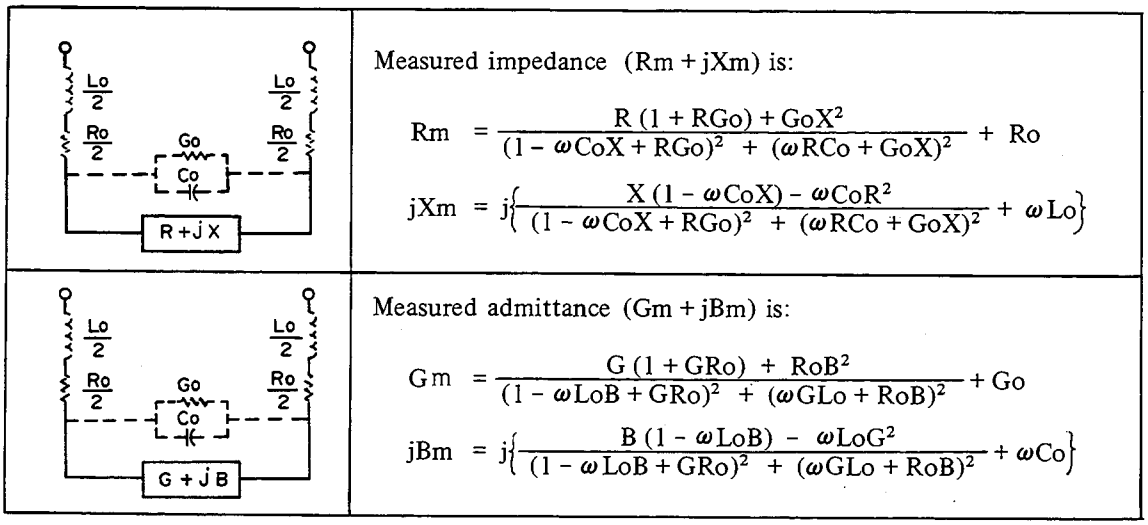


Figure 3-25. Equivalent Circuits Including Residual Impedance

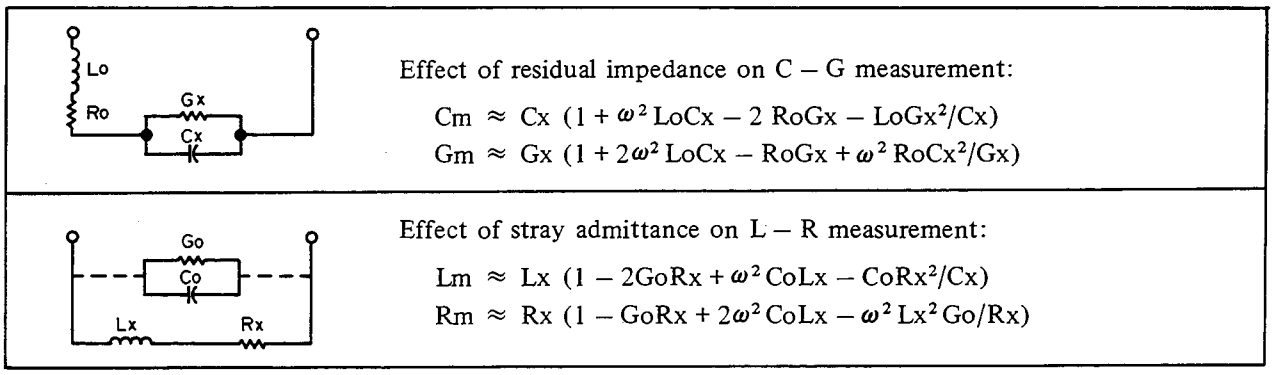


**Figure 3-26. Effects of Residual Impedance**

called residual parameters). In the equivalent measuring circuit (Figure 3-25), Lo represents residual inductances in test component leads, Ro is lead resistance. Go is conductance between the leads, and Co is the stray capacitance illustrated in Figure 3-24. Reactive factors in the residual impedance and susceptive factors in the stray admittance have a greater effect on measurement at higher frequencies.

3-85. Figure 3-26 shows the effect of residual impedance on C – G measurement and the effect of stray admittance on L – R measurement. Generally, Lo resonates with the capacitance of the sample (series resonance) and Co resonates with the inductance of the sample (parallel resonance), respectively, at a specific high frequency. Thus, the impedance of the test sample will have a minimum value corresponding to resonant peaks, as shown in Figure 3-27. The presence of Lo and Co causes measurement errors, as the phase of the test signal current varies over a broad frequency region around the resonant frequencies. Additional errors, due to the resonance, increase in proportion to the square of the measurement frequency (below resonant frequency) and can be theoretically approximated as follows:

$$C_{ERROR} \approx \omega^2 LoCx \cdot 100\ (\%)$$
$$L_{ERROR} \approx \omega^2 CoLx \cdot 100\ (\%)$$

where, $\omega = 2\pi f$ (f : test frequency)
Cx = Capacitance value of sample.
Lx = Inductance value of sample.

At low frequencies, Lo and Co affect the measured inductance and capacitance values, respectively, as simple additive errors. These measurement errors cannot be fully eliminated by the ZERO offset adjustment (which permits compensating for residual factors inherent in the test fixture used). This is because Lo and Co are peculiar to the component being measured. Their values depend on component lead length and on the distance between the sample and test fixture. The measurement results, then, are substantially the sample values including the parasitic impednaces present under the conditions necessary to connect and hold the sample.

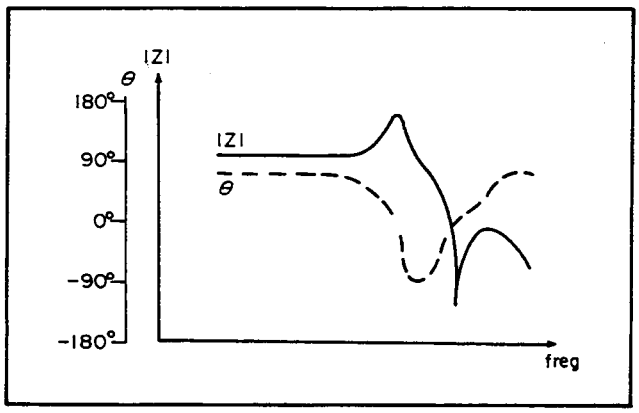


**Figure 3-27. Effect of Resonance in Sample (Example)**

### 3-86. Measured Values and Behavior of Components

3-87. Measured resistive and reactive (conductive or susceptive) parameter values of a component are not always close to their respective nominal values. In addition, certain electrical effects can cause the measurement to vary widely. Measured sample values include factors which vary such values because of electromagnetic effects such as the well-known skin effect of a conductor, the general characteristics of ferromagnetic inductor cores, and effects of dielectric materials in capacitors. Here, we'll discuss only the effects which result from the interaction of the reactive (susceptive) parameter elements (L, C, etc.) of a component.

3-88. The impedance of a component can be expressed in vector representation by a complex number as shown in Figure 3-28. In such representation, the effective resistance and effective reactance correspond to the projections of the impedance vector $|Z|<\theta$, that is, the real (R) axis and the imaginary (jX) axis, respectively.

When phase angle, $\theta$, changes, both Re and X change in accordance with the definitions above. As component measurement parameters L, C, R, D, etc., are also representations of components related to the impedance vector, phase angle, $\theta$, dominates their values. Consider, for example, the inductance and the loss of an inductive component at frequencies around its self-resonant frequency. Figure 3-29 shows the equivalent circuit of the inductor. The inductance Lx resonates with the distributed capacitance Co at frequency fo. The phase angle ($\theta$) of the impedance vector approaches 0 degrees (the vector approaches the R axis) when the operating frequency is close to the resonant frequency. Thus, the inductance of this component decreases while, on the other hand, the resistive factor (loss) increases. At the resonant frequency, fo, this component is purely resistive. The effective resistance increases at resonance even if the inductor has (ideally) no resistance at dc. Consequently, the loss factor varies sharply at frequencies around the resonance point.

### 3-89. Measurement Time

3-90. Table 3-19 shows the measurement times for impedance measurements made with the 4192A.

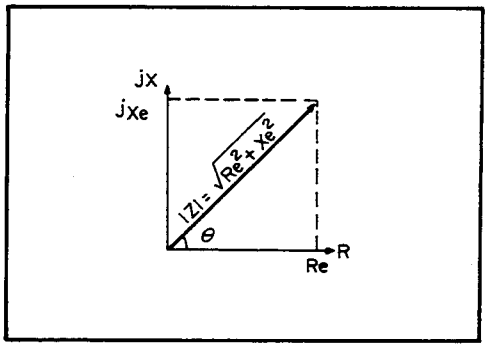


Figure 3-28. Impedance Vector Representation

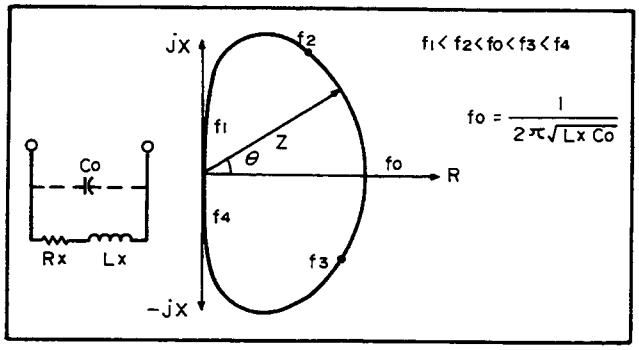


Figure 3-29. Typical Impedance Locus of an Inductor

## Table 3-19. Measurement Time for Impedance Measurement

| Measurement Function | Measurement Mode | Measurement Frequency (Hz) | | | | |
|---|---|---|---|---|---|---|
| | | 5 ~ 15 | 15 ~ 150 | 150 ~ 400 | 400 ~ 116k | 116k ~ 13M |
| \|Z\|/\|Y\| – $\theta$ | HIGH SPEED | $\frac{5000}{f}$ + 57.5 ~ $\frac{5000}{f}$ + 71.5 | | | 70 ~ 84 | 77 ~ 91 |
| | NORMAL | $\frac{5000}{f}$ + 59 ~ $\frac{5000}{f}$ + 72 | $\frac{15000}{f}$ + 59 ~ $\frac{15000}{f}$ + 72 | | 159 ~ 172 | 166 ~ 179 |
| | AVERAGE | $\frac{15000}{f}$ + 60 ~ $\frac{15000}{f}$ + 73 | | 1060 ~ 1073 | | 1067 ~ 1080 |
| R/G – X/B | HIGH SPEED | $\frac{5000}{f}$ + 45.5 | | | 58 | 65 |
| | NORMAL | $\frac{5000}{f}$ + 47 | $\frac{15000}{f}$ + 47 | | 147 | 154 |
| | AVERAGE | $\frac{15000}{f}$ + 48 | | 1048 | | 1055 |
| L/C – D/Q/R/G | HIGH SPEED | $\frac{5000}{f}$ + 60.5 ~ $\frac{5000}{f}$ + 64.5 | | | 63 ~ 67 | 70 ~ 74 |
| | NORMAL | $\frac{5000}{f}$ + 52 ~ $\frac{5000}{f}$ + 55 | $\frac{15000}{f}$ + 52 ~ $\frac{15000}{f}$ + 55 | | 152 ~ 155 | 159 ~ 162 |
| | AVERAGE | $\frac{15000}{f}$ + 52 ~ $\frac{15000}{f}$ + 55 | | 1052 ~ 1055 | | 1059 ~ 1062 |
| \|Z\|/\|Y\|* | HIGH SPEED | $\frac{5000}{f}$ + 47.5 | | | 60 | 67 |
| | NORMAL | $\frac{5000}{f}$ + 49 | $\frac{15000}{f}$ + 49 | | 149 | 156 |
| | AVERAGE | $\frac{15000}{f}$ + 50 | | 1050 | | 1057 |
| R/X* | HIGH SPEED | $\frac{5000}{f}$ + 41.5 | | | 54 | 61 |
| | NORMAL | $\frac{5000}{f}$ + 41 | $\frac{15000}{f}$ + 41 | | 141 | 148 |
| | AVERAGE | $\frac{15000}{f}$ + 43 | | 1043 | | 1050 |
| L/C* | HIGH SPEED | $\frac{15000}{f}$ + 44.5 | | | 57 | 64 |
| | NORMAL | $\frac{5000}{f}$ + 45 | $\frac{15000}{f}$ + 45 | | 145 | 152 |
| | AVERAGE | $\frac{15000}{f}$ + 46 | | 1046 | | 1053 |

Measurement times are typical values in ms; f : measuring frequency (Hz).

* : Measurement times for |Z|/|Y|, R/X and L/C are times at single measurements by setting an internal switch (refer to paragraph 3-139).

### 3-91. Test Signal Level Monitor

3-92. The 4192A can measure the actual test signal voltage (V) across the DUT or test signal current (mA) through the DUT by using TEST LEVEL MONITOR key. The measured value is displayed on the Test Parameter Data Display.

Key strokes (voltage) : TEST LEVEL MONITOR V/mA

Key strokes (current) : Blue TEST LEVEL MONITOR V/mA

Accuracy for the test signal voltage and current is given in Table 3-20. The accuracies listed in the table are not specifications; they are typical values. The read out of test signal voltage will normally be close to the setting of the OSC LEVEL. However, when a low impedance component (less than approximately 1kΩ) is connected to the UNKNOWN terminals as a DUT, the test signal voltage decreases because of internal loading. Actual test signal voltage is, thus, lower than the OSC LEVEL setting. The displayed value, nevertheless, is the correct voltage/current readout for the test signal level actually being used in the measurement.

When test cables are used in high frequency measurements, accuracy of the displayed test voltage is reduced. This is because the propagation loss in the test cables decreases the level of the test signal applied to the sample. The typical accuracies at frequencies above 1MHz, given in Table 3-20, apply only when a direct attachment type test fixture is used.

**Table 3-20. Test Signal Level Monitor Accuracy**

| Measurement Mode | Measurement Range | Resolution | Measuring Frequency | Accuracy* |
|---|---|---|---|---|
| Voltage | 5mV ~ 1.1V | 1mV | ≤ 100Hz | ± ((4 + 10/f) % of reading + 1mV) |
| | | | 100Hz ~ 1MHz | ± ( 4% of reading + 1mV) |
| | | | ≥ 1MHz | ± ((4 + 0.8F) % of reading + 1mV) |
| Current | 1μA ~ 11mV | 1μA | ≤ 100Hz | ± ((4 + 10/f) % of reading + 1μA) |
| | | | 100Hz ~ 1MHz | ± ( 4% of reading + 1μA) |
| | | | ≥ 1MHz | ± ((4 + 0.8F) % of reading + 1μA) |
| * : at 23°C ± 5°C, f : measuring frequency (Hz), F : measuring frequency (MHz). | | | | |

## 3-93. Characteristics of Test Fixtures

3-94. Characteristics and applicable measurement ranges of HP test fixtures and test leads for the 4192A are summarized in Table 3-21. To facilitate measurement and to minimize measurement errors, a test fixture appropriate for the measurement should be chosen from among HP's standard accessories. Select the test fixture or leads that have the desired performance characteristics.

**Table 3-21. Typical Characteristics of Test Fixtures and Leads**

| Model No. | Residual Parameter Value | % of Reading Error (All Parameters)*1 | Offset Value in D |
|---|---|---|---|
| 16047A | | $\pm 5 \times (\frac{f}{10})^2$ % | $\pm 0.02 \times (\frac{f}{10})^2$ |
| 16047B*2 | | | |
| 16047C | | $\pm 1 \times (\frac{f}{10})^2$ % | $\pm 0.01 \times (\frac{f}{10})^2$ |
| 16048A | | $\pm 5 \times (\frac{f}{10})^2$ % | $\pm 0.02 \times (\frac{f}{10})^2$ |
| 16048B | | | |
| 16048C*3 | C < 5pF, L < 200nH, R < 10mΩ | | |
| 16034B*4 | C < 0.02pF, L < 30nH, R < 30mΩ | $\pm 5 \times (\frac{f}{10})^2$ % | $\pm 0.02 \times (\frac{f}{10})^2$ |
| 16095A*5 | C ≤ 15pF, L ≤ 40nH, R ≤ 100mΩ | | |
| 16096A*6 | C ≤ 0.01pF, L ≤ (100 + 0.5f²)nH, R ≤ (50 + 5f²) mΩ | | |

f : frequency (MHz)

*1 : The incremental errors calculated from the equations in the table for measurements at frequencies above 1MHz are additive.

*2 : The 16047B is useable only at frequencies below 2MHz.

*3 : The 16048C is useable with C (> 1000pF) and L (> 100μH) DUT's at frequencies below 100kHz.

*4 : The 16034B is useable only at frequencies below 3MHz and for measurement of devices whose impedance magnitude exceeds 50 ohms.

*5 : When BNC adapter is used.

*6 : At BNC connector after zero offset.

## 3-95. Impedance Measurement Operating Instructions

3-96. Basic operating instructions for impedance measurements are given in Figure 3-30.

(1) Turn On and Test Fixture Connection

a. Press the LINE ON/OFF key to turn the 4192A on.

b. Following turn on, the instrument will perform the following operations in the order listed.

1 Initial operational check is performed (refer to paragraph 3-7).

2 HP-IB address, set by the HP-IB control switch on rear-panel (refer to paragraph 3-117), is displayed on DISPLAY A (e.g., H-17).

3 Initial control setting is performed (refer to paragraph 3-9).

c. Confirm that 4192A trigger lamp begins to flash.

d. Press the BLUE key and then the SELF TEST key to check the basic operation of the instrument. Refer to paragraph 3-7 for details on the SELF TEST.

*Note: The 4192A requires a one hour warm up time to satisfy all specifications listed in Table 1-1.*

e. Set the CABLE LENGTH switch to the 0 position.

*Note: Set the CABLE LENGTH switch to appropriate position when other test fixtures are used. Guard terminal is sometimes used in high impedance measurements.*

f. Connect the 16047A Test Fixture to the UNKNOWN terminals.

(2) Setting Measurement Conditions

a. Select the desired DISPLAY A parameter by pressing the ⇧ or ⇩ (up-down) key. The indicator lamp adjacent to the selected parameter will come on (refer to paragraph 3-69).

b. Select the desired DISPLAY B parameter (compatible with the DISPLAY A parameter selected in step a) by pressing the ⇩ key (refer to paragraph 3-69).

c. Select the desired equivalent circuit mode, series ( 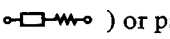 ) or parallel ( 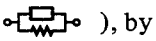 ), by pressing CIRCUIT MODE keys for selected DISPLAY A function (refer to paragraph 3-73).

d. Select the desired ZY RANGE by pressing the ⇧ or ⇩ (up-down) key (refer to paragraph 3-71).

e. Press SPOT FREQ key. Set the desired spot frequency (initial setting is 100kHz) with the DATA input keys (refer to paragraph 3-29) and press the appropriate ENTER key.

(Example) Spot frequency = 7.5MHz

Key strokes : STOP FREQ/BIAS [0] [7] [.] [5] MHz V

The spot frequency setting, 7500.000kHz, is displayed on DISPLAY C (Test Parameter Data Display).

**Figure 3-30. Operating Instructions for Impedance Measurements (Sheet 1 of 3)**

f. Press the OSC LEVEL key. Set the desired measuring signal level (initial setting value is 1 V) with the DATA input keys (refer to paragraph 3-24) and press the appropriate ENTER key.

(Example) OSC level = 750mV

Key strokes : [OSC LEVEL] [0] [7] [5] [0] [kHz mV]

The OSC level setting, 0.750V, is displayed on DISPLAY C.

(3) ZERO Offset Adjustments

*Note: When the 16047B Test Fixture is used, close the protective cover to enable measurement. Closing the cover electrically connects the instrument's UNKNOWN terminals to the fixture; opening the cover disconnects the fixture from terminals.*

a. Insert a low impedance shorting-bar to the Test Fixture to short-circuit the UNKNOWN terminals to 0Ω (0H).

b. Press the BLUE key and then the ZERO SHORT key. Indicator lamp will come on and R (resistance) and X (reactance) offset adjustments are automatically performed at the spot frequency displayed on DISPLAY C (refer to paragraph 3-79). CAL (calibration) is displayed on DISPLAY A and will remain until the offset adjustment is completed; a value of approximately zero will then be displayed.

Key strokes : [Blue] [SHORT 9]

c. Remove the shorting-bar from the test fixture.

d. Set the circuit mode to

e. Press the BLUE key and the ZERO OPEN key. Indicator lamp will come on and G (conductance) and B (susceptance) offset adjustments are automatically performed at the spot measuring frequency displayed on DISPLAY C (refer to paragraph 3-79). CAL (calibration) is displayed on DISPLAY A and will remain until the offset adjustment is completed; a value of approximately zero will then be displayed.

Key strokes : [Blue] [OPEN 8]

(4) Connecting a DUT (Device Under Test)

a. Connect a DUT to Test Fixture.

*Note: To accurately set the test signal level, use the TEST LEVEL MONITOR key to monitor the actual test signal level applied to the DUT (voltage or current) (refer to paragraph 3-91). If necessary, reset OSC LEVEL at step (3)-(f).*

b. The 4192A will automatically display the measured values of the DUT in accordance with the measurement conditions.

**Figure 3-30. Operating Instructions for Impedance Measurements (Sheet 2 of 3)**

CAUTIONS

1) Do not apply voltage to the LCUR or LPOT terminals. To do so may damage the instrument.

2) The 4192A can be used to measure charged capacitors; however, charge voltage is limited. If the limit is exceeded, i.e., if the charge voltage is too high, the instrument may be damaged. The limit depends on whether the 4192A's internal dc bias source is ON or OFF and the capacitance of the capacitor being measured. Refer to the graph below. Also, when the bias source is ON, output voltage should be set to 0V.

3) When making impedance measurements on an active circuit (e.g., voltage source, battery, etc.), DO NOT allow a dc voltage exceeding ±10V to be applied to the HCUR terminal. To do so may damage the instrument. Also, in these measurements, the 4192A becomes part of the load (parallel) on the dc voltage present in the circuit under test. Refer to the table below. When the dc bias voltage of the circuit is higher than ±10V, connect a 2.2μF (or less) capacitor in series with the HCUR terminal to block the dc bias voltage. If a suitable capacitor is not available from conventional sources, order HP Part No.: 0160-0128; 2.2μF, 50V.
The 16095A Probe Fixture is equipped with this blocking capacitor; the 16096A, however, is not. When the 16096A is used, connect the blocking capacitor to the SHORT/EXTERNAL CAP terminals instead of the short-connector. With the blocking capacitor connected, the output impedance of the test signal source is increased and, thus, the signal level is reduced. Consequently, accurate impedance measurements on active circuits are possible only above a specified frequency for a given |Z| range. Refer to the graph below. For example, if the impedance of the DUT is 9kΩ, the 4192A automatically selects the 10kΩ range. On this range, with the 2.2μF capacitor connected, the lowest useable frequency is approximately 80Hz. At frequencies below 80Hz, accuracy of measurement results decreases. For measurements at lower frequencies, a higher value blocking capacitor must be used. To measure the 9kΩ DUT mentioned above at 10Hz, for example, a blocking capacitor of approximately 12μF must be used.
To change the value of the blocking capacitor in the 16095A, an external capacitor must be connected to the EXT CAPACITOR terminals. The value of this capacitor must be equal to the desired blocking capacitor value (determined from the graph) minus 2.2μF (the value of the blocking capacitor in the 16095A).When the value of the blocking capacitor is higher than 2.2μF, the maximum allowable dc bias voltage is ±10V. NEVER apply a dc voltage exceeding ±35V to the HCUR terminal.

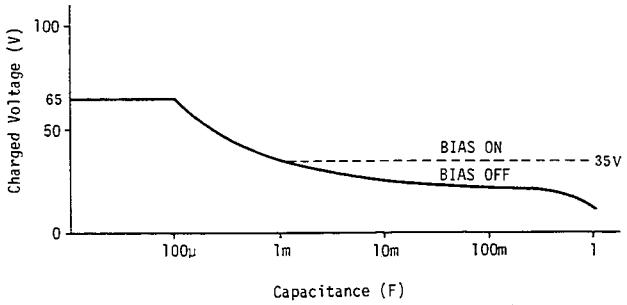


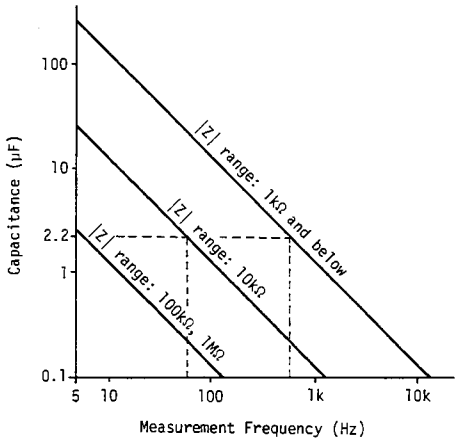


| Measurement Frequency | @ <38kHz | | | @ ≧38kHz | |
|---|---|---|---|---|---|
| ZY RANGE | ≤1kΩ | 10kΩ | ≥100kΩ | ≤1kΩ | ≥10kΩ |
| DC Load | 140Ω | 980Ω | 8.4kΩ | 140Ω | 160Ω |

**Figure 3-30. Operating Instructions for Impedance Measurements (Sheet 3 of 3)**

### 3-97. Swept Frequency Measurements

3-98. Basic operating instructions for swept-frequency impedance measurements are given in Figure 3-31.

*Notes: 1. Before proceeding with the procedure given below, set the 4192A's controls as necessary for an impedance measurement. Refer to Figure 3-30.*

*2. The 4192A has a ZERO offset adjustment function to eliminate the residual impedance and stray admittance of the test fixture and test leads. ZERO offset adjustment should be performed at each spot (measuring) frequency. However, the 4192A calculates ZERO offset data (SHORT and OPEN) at other frequencies using the ZERO offset data taken at a particular frequency as shown in Table 3-18 and compensates measured values at other frequencies. When a swept-frequency measurement is performed. ZERO offset adjustment should be performed at the appropriate frequency in accordance with Table 3-18. In this procedure (Example START FREQ = 100kHz and STOP FREQ = 1MHz), ZERO offset adjustment (SHORT and OPEN) should be performed at 1MHz.*

(1) Setting Sweep Parameters

a. Press the START FREQ key. Set the start (lower limit) frequency (initial setting value is 5Hz) of the desired sweep frequency range with the DATA input keys (refer to paragraph 3-24) and press the appropriate ENTER key.

(Example) Start frequency = 100kHz

Key strokes : START FREQ/BIAS [0] [1] [0] kHz mV

The start frequency setting, 100.0000kHz, is displayed on DISPLAY C (Test Parameter Data Display).

b. Press the STOP FREQ key. Set the stop (upper limit) frequency (initial setting is 13MHz) of the desired sweep frequency range with the DATA input keys (refer to paragraph 3-24) and press the appropriate ENTER key.

(Example) Stop frequency = 1MHz

Key strokes : STOP FREQ/BIAS [0] [1] MHz V

The stop frequency setting, 1000.000kHz, is displayed on DISPLAY C.

*Note: The stop frequency should be higher than the start frequency. If not, error-code E-03 will be displayed on DISPLAY C when swept measurement is attempted and measurement will be not performed.*

c. Press the STEP FREQ key. Set the desired step frequency (initial setting is 1kHz) with the DATA input keys (refer to paragraph 3-24) and press the appropriate ENTER key.

(Example) Step frequency = 1kHz

Key strokes : STEP FREQ/BIAS [0] [1] kHz mV

The step frequency setting, 1.000000kHz, is displayed on DISPLAY C.

**Figure 3-31. Operating Instructions for Swept-Frequency Impedance Measurements (Sheet 1 of 3)**

*Note: In LOG SWEEP measurement applications, STEP FREQ. has no meaning. To set the instrument to logarithmic sweep mode, press the BLUE key and the LOG SWEEP key; the indicator lamp will come on. In this mode, automatic or manual sweeps are made at twenty frequency steps per decade. Each step is calculated from the following formula:*

$$F \times 10^{0.05N}$$

*where* F *is the start frequency (5Hz, 10Hz, 100Hz, 1kHz, 10kHz, 100kHz, 1MHz, or 10MHz) and* N *is an integer that represents the step number. For example, if the start frequency is 100kHz and the stop frequency is 1MHz, the sweep will be as follows:*

| | | | | | | | |
|---|---|---|---|---|---|---|---|
| 1 | 112.2018kHz | 6 | 199.5262kHz | 11 | 354.8133kHz | 16 | 630.9573kHz |
| 2 | 125.8925kHz | 7 | 223.8721kHz | 12 | 398.1071kHz | 17 | 707.9457kHz |
| 3 | 141.2537kHz | 8 | 251.1886kHz | 13 | 446.6835kHz | 18 | 794.3282kHz |
| 4 | 158.4893kHz | 9 | 281.8382kHz | 14 | 501.1872kHz | 19 | 891.2509kHz |
| 5 | 177.8279kHz | 10 | 316.2277kHz | 15 | 562.3413kHz | 20 | 1000.000kHz |

*The start and stop frequencies, which determine the sweep range, are limited to decade values (10, 100 1k, 10k, 100k, 1M, 10M). If, for example, the start frequency is set to 50kHz and the stop frequency is set to 800kHz, the instrument automatically sets the sweep range to 10kHz to 1MHz. There are, however, two exceptions to this: (1) when the start frequency is set to a value below 10Hz and (2) when the stop frequency is set to a value above 10MHz. In such cases, the instrument automatically assumes a start frequency of 5Hz and a stop frequency of 13MHz, respectively.*

(2) Manual Sweep

In manual sweeps, the sweep begins at the spot frequency and the sweep range is determined by the start and stop frequencies.

a. Set the desired spot frequency (initial setting is 100kHz) with the DATA input keys (refer to paragraph 3-24) and press the appropriate ENTER key.

(Example) Spot frequency = 100kHz

Key strokes : SPOT EDEQ/BIAS [0] [1] [0] [0] kHz mV

The spot frequency, 100.0000kHz, is displayed on DISPLAY C.

b. Press the STEP UP [⇧] key or STEP DOWN [⇩] key to shift the frequency one step (determined by the step frequency setting) in the indicated direction.

*Notes: 1. In logarithmic sweep mode, the measurement frequency is automatically shifted to the nearest frequency that satisfies the equation* $F \times 10^{0.05N} = Fm$*; where* F *is the start frequency,* Fm *is the measurement frequency, and* N *is an integer that represents the step number.*

*2. If the spot frequency is higher than the stop frequency or less than the start frequency, error-cord E-04 will be displayed on DISPLAY C and the measurement will not be performed.*

c. Pressing and holding the STEP UP ( [⇧] ) key or STEP DOWN ( [⇩] ) key continuously advances swept frequency measurement.

d. When X10 STEP key is pressed simultaneously with the STEP UP ( [⇧] ) or STEP DOWN ( [⇩] ) key, the step frequency is increased by a factor of ten. (This is for linear sweeps only.)

**Figure 3-31. Operating Instructions for Swept-Frequency Impedance Measurements (Sheet 2 of 3)**

(3) Auto Sweep

a. Press MAN/AUTO key to set to auto sweep mode (indicator lamp comes on).

b. 1 Pressing the START UP ( ⇧ ) key starts the frequency sweep from the programmed start frequency. The frequency sweep ends at the stop frequency.

2 Pressing the START DOWN ( ⇩ ) key starts the frequency sweep from the stop frequency. The frequency sweep ends at the start frequency.

*Note: 1) Swept test frequency is displayed on DISPLAY C.*
*2) ZY RANGE is automatically set to AUTO when auto sweep is started.*

c. To temporarily stop a swept frequency measurement, press the PAUSE key. Start frequency, stop frequency, step frequency, sweep direction, and sweep mode (linear or logarithmic, auto or manual) can be changed when the PAUSE function is set. To restart the sweep, press the START UP ( ⇧ ) key or START DOWN ( ⇩ ) key.

d. AUTO sweep measurement mode is automatically released when the swept measurement ends (reaches the stop frequency or start frequency). To stop the sweep before the measurement is completed, press blue key and then press the SWEEP ABORT key.

Key Strokes : Blue SWEEP ABORT –

To return to normal spot frequency measurement, press the SWEEP AUTO key (indicator lamp goes off).

Notes: 1) When a swept frequency measurement is made, if the sweep comes to a frequency band which has lower frequency resolution than the STEP FREQ., this STEP FREQ. automatically changes to the higher resolution frequency, and the sweep is continued.

2) When the swept frequency crosses 38kHz, an additional 50msec is required for measurement circuit stabilization.

**Figure 3-31. Operating Instructions for Swept-Frequency Impedance Measurements (Sheet 3 of 3)**

### 3-99. Swept OSC Level Measurements

3-100. The OSC level can be manually swept in 1mVrms (5mVrms at 100mVS) steps by pressing the STEP UP ⇧ key or STEP DOWN ⇩ key. In impedance measurements, the OSC level can be swept while monitoring the actual test signal voltage across- or the current through the device under test (DUT) using the TEST LEVEL MONITOR function (refer to paragraph 3-91). Therefore, accurate test signal level characteristics of the DUT can be obtained easily.

### 3-101. Internal DC Bias Supply

3-102. The 4192A is equipped with an internal, programmable dc bias supply controllable from 0.00V to ±35.00V (for impedance measurements only). This provides step bias voltage control in 10mV increments over the entire controllable range as well as providing an accurate voltage setting capability (±0.5% of setting +5mV) to facilitate up-to-date use in applications requiring precision bias voltage control such as analysis of material properties and semiconductor testing. The bias can be programmed and bias parameters memorized, further enhancing utility of the internal bias supply. Operating instructions on measurements using the internal dc bias supply are provided in Figure 3-32.

*Notes: 1. Before proceeding with the procedure given below, set the 4192A's controls for an impedance measurement. Refer to Figure 3-30.*

*2. Test frequency can be swept while using the internal dc bias set to desired (spot) voltage.*

To apply a stationary (fixed) bias voltage to the sample, set the desired bias voltage using the following procedure:

(1) Press the BLUE key and SPOT BIAS key. Set the desired spot bias voltage (initial setting is 0V) with the DATA input keys (refer to paragraph 3-29) and press the appropriate ENTER key.

(Example) Spot bias voltage = - 3.5 V

Key strokes : Blue | SPOT FREQ/BIAS 0 | (-) | 3 | . | 5 | MHz V

The spot bias voltage setting, −3.50V, is displayed on DISPLAY C (Test Parameter Data Display).

*Note: The internal dc bias voltage is applied to the sample just after the bias voltage value is set by the front-panel control keys (requires no trigger signal).*

**WARNING**

**WHEN THE INTERNAL DC BIAS VOLTAGE IS APPLIED TO THE SAMPLE, THE "BIAS-ON" INDICATOR COMES ON. WHILE THE BIAS ON INDICATOR IS ON, REMEMBER THAT THE 4192A IS OUTPUTTING A DC BIAS VOLTAGE FROM THE UNKNOWN TERMINALS, EVEN IF DISPLAY C IS NOT DISPLAYING THE BIAS VOLTAGE.**

(2) Press the BLUE key and the BIAS OFF key to stop output of the internal dc bias voltage. The BIAS ON indicator lamp will go off.

Key strokes : Blue | BIAS OFF 7

WARNING

WHEN A DC BIAS VOLTAGE EXCEEDING ±5V IS BEING OUTPUT AND THE BIAS OFF KEY IS PRESSED, THE BIAS ON INDICATOR LAMP GOES OFF BUT THE OUTPUT VOLTAGE DOES NOT IMMEDIATELY RETURN TO 0V. IT DECREASES LINEARLY (as shown graphically below) UNTIL IT REACHES ±5V. THE TRANSITION FROM ±5V TO 0V IS INSTANTANEOUS. THE DISCHARGE TIME IS CALCULATED AS FOLLOWS:

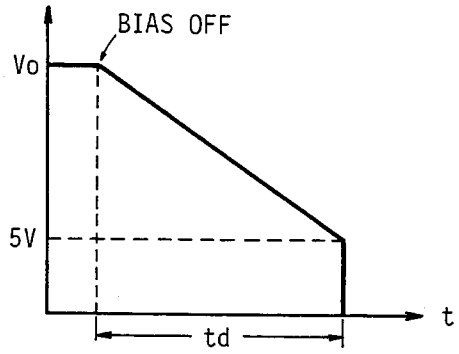


$$td = \frac{(|Vo| - 5) \times Cx}{Id} \ (s)$$

Where, td: Discharge Time (s)
Vo: Output Voltage (V)
Cx: DUT's Capacitance (F)
Id: Discharge Current (0.025A constant)

(ex.) Vo = 35V, Cx = 1mF

$$td = \frac{30 \times 0.001}{0.025} = 1.2 \ (s)$$

**Figure 3-32. Operating Instructions for Internal DC Bias Supply**

### 3-103. Swept Bias Voltage Measurements

3-104. Basic operating instructions for swept-bias voltage impedance measurements are given in Figure 3-33.

*Note: Before proceeding with the procedure given below, set the 4192A's controls as necessary for an impedance measurement. Refer to Figure 3-30.*

(1) Setting Sweep Parameters

a. Press the BLUE key and START BIAS key. Set the start (lower limit) voltage (initial setting is –35V) of the desired sweep bias voltage range with the DATA input keys (refer to paragraph 3-24) and press the appropriate ENTER key.

(Example) Start bias voltage = –5V

Key strokes : Blue START FREQ/BIAS 0 – 5 MHz V

The start bias voltage setting, -5.00V, is displayed on DISPLAY C (Test Parameter Data Display).

b. Press the BLUE key and STOP BIAS key. Set the stop (upper limit) voltage (initial setting is 35V) of the desired sweep bias voltage range with the DATA input keys (refer to paragraph 3-24) and press the appropriate ENTER key.

(Example) Stop bias voltage = 8.5V

Key strokes : Blue STOP FREQ/BIAS 0 8 . 5 MHz V

The stop bias voltage setting, 8.50V, is displayed on DISPLAY C.

*Note: The stop bias voltage should be higher than the start bias voltage. If not, error-code E-03 will be displayed on DISPLAY C when swept measurement is attempted and measurement will be not performed.*

c. Press the BLUE key and STEP BIAS key. Set the desired step bias voltage (initial setting is 1V) with the DATA input keys (refer to paragraph 3-24) and press the appropriate ENTER key.

(Example) Step bias voltage = 0.1V

Key strokes : Blue STEP FREQ/BIAS 0 . 1 MHz V

The step bias voltage setting, 0.10V, is displayed on DISPLAY C.

*Note: The LOG SWEEP cannot be performed for swept bias voltage measurements.*

(2) Manual Sweep

In manual sweeps, the sweep begins at the spot bias voltage and the sweep range is determined by the start and stop bias voltages.

a. Set the desired spot bias voltage (initial setting is 0V) with the DATA input keys (refer to paragraph 3-24) and press the appropriate ENTER key.

(Example) Spot bias voltage = 1V

Key strokes : Blue 1 MHz V

The spot bias voltage, 1.00V, is displayed on DISPLAY C.

**Figure 3-33. Operating Instructions for Swept-Bias Voltage Impedance Measurements (Sheet 1 of 2)**

b. Press the STEP UP [⇧] key or STEP DOWN [⇩] key to shift the bias voltage one step (determined by the step bias voltage setting) in the indicated direction.

*Note: If the spot bias voltage is higher than the stop bias voltage or less than the start bias voltage, error-code E-04 will be displayed on DISPLAY C and the measurement will not be performed.*

c. Pressing and holding the STEP UP ( [⇧] ) key or STEP DOWN ( [⇩] ) key continuously advances swept bias voltage measurement.

d. When X10 STEP key is pressed simultaneously with the STEP UP ( [⇧] ) or STEP DOWN ( [⇩] ) key, the step bias voltage is increased by a factor of ten. (This is for linear sweeps only.)

(3) Auto Sweep

a. Press MAN/AUTO key to set to auto sweep mode (indicator lamp comes on).

b. ① Pressing the START UP ( [⇧] ) key starts the bias voltage sweep from the programmed start bias voltage. The bias voltage sweep ends at the stop bias voltage.

② Pressing the START DOWN ( [⇩] ) key starts the bias voltage sweep from the stop bias voltage. The bias voltage sweep ends at the start bias voltage.

*Note: Swept bias voltage is displayed on DISPLAY C.*

c. To temporarily stop a swept bias voltage measurement, press the PAUSE key. Start bias voltage, stop bias voltage, step bias voltage, sweep direction, and sweep mode (linear or logarithmic, auto or manual) can be changed when the PAUSE function is set. To restart the sweep, press the START UP ( [⇧] ) key or START DOWN ( [⇩] ) key.

d. AUTO sweep measurement mode is automatically released when the swept measurement ends (reaches the stop bias voltage or start bias voltage). To stop the sweep before the measurement is completed, press BLUE key and then press the SWEEP ABORT key.

Key strokes : [Blue] [SWEEP ABORT −]

To return to normal spot bias voltage measurement, press the SWEEP AUTO key (indicator lamp goes off).

**Figure 3-33. Operating Instructions for Swept-Bias Voltage Impedance Measurements (Sheet 2 of 2)**

### 3-105. Measurement of Grounded Devices

3-106. The unique measuring circuitry of the 4192A provides direct, accurate impedance measurements of not only floated and but also grounded devices. Such measurement conditions are, for example, the distributed capacitance measurement of a coaxial cable with a grounded shield conductor or the input/output impedance measurement of a single ended amplifier. Low grounded measurement accuracy is unspecified, but typical measurement accuracy is provided in Table 1-21.

### 3-107. External DC Bias

3-108. The special biasing circuits and procedures for using external voltage or current bias, as needed for capacitance or inductance measurements, are provided in Figure 3-34. The figure shows sample circuits appropriate for 4192A applications. The biasing circuits prevent dc current from flowing into the 4192A, as dc current increases the measurement error and because the excess current may damage instrument. When applying a dc voltage to capacitors, be sure the applied voltage does not exceed the maximum specified voltage of the capacitor and that the capacitor is connected with correct polarity.

(1) External DC Bias Voltage ($\leqq$ 200V)

a. Press the LINE ON/OFF key to turn the 4192A off.

b. Connect the external dc bias source to the 4192A as shown in the figure below:

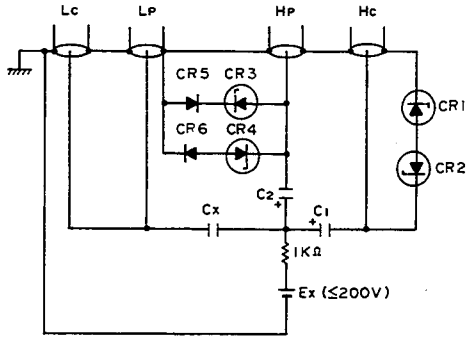


**Figure A. Floating Measurement**

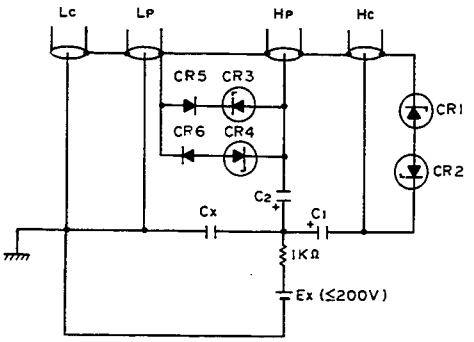


**Figure B. Low-grounded Measurement**

where Cx : Sample capacitor
Ex : External dc bias voltage ($\leqq$ 200V)
$C_1$ : Blocking capacitor
Capacitance Value :

$$C_1 \geqq \frac{1}{10\pi \cdot f} \text{ (f : measuring frequency (Hz))}$$

DC Withstand Voltage : > Ex.

$C_2$ : Blocking capacitor
Capacitance Value : 1$\mu$F
DC Withstand Voltage : > Ex.

$CR_1$, $CR_2$ : HP Part No. : 1902–0176
Diode-Zener, 47V5%, 1W
$CR_3$, $CR_4$ : HP Part No. : 1902–1299
Diode-Zener, 33V5%, 1W
$CR_5$, $CR_6$ : HP Part No. : 1901–0646
Diode-Zener, 3.3V5%, 1W

Cautions: 1. **Never apply an external dc bias voltage of over 200V and never connect the $H_{POT}$ terminal to the $L_{CUR}$ or $L_{POT}$ terminal. To do so may damage instrument. Make sure that the sample capacitor is not defective.**

2. **When a positive bias voltage is used, positive poles of electrolytic capacitors (Cx, C, and $C_2$) must be connected to the positive (+) terminal of the external dc bias source as shown in the figures above. A negative bias voltage can also be applied. In this arrangement, the negative poles of Cx, $C_1$, and $C_2$ must be connected to the negative (−) terminal of the external dc bias source.**

*Note: Ripple or noise on external dc bias source should be as low as possible.*

c. Set the 4192A's controls as necessary for an impedance measurement. Refer to Figure 3-30, but following settings should be made.

DISPLAY A Function ..... C
BIAS ..... OFF
CIRCUIT MODE .....

d. Apply desired dc bias voltage to the sample capacitor with the external dc bias source.

e. Read the capacitance value – on DISPLAY A – after allowing time for bias voltage to settle.

**Figure 3-34. External DC Voltage Supply (Sheet 1 of 2)**

(2) External DC Bias Current

a. Press the LINE ON/OFF key to turn the 4192A off.

b. Connect the external dc bias source to the 4192A as shown in the figure below:

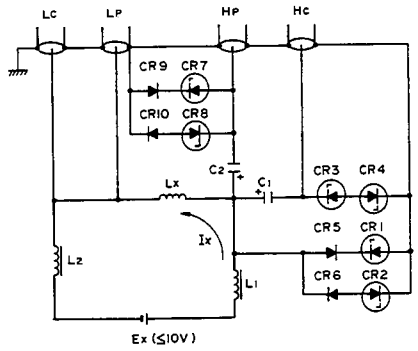


**Figure C. Floating Measurement**

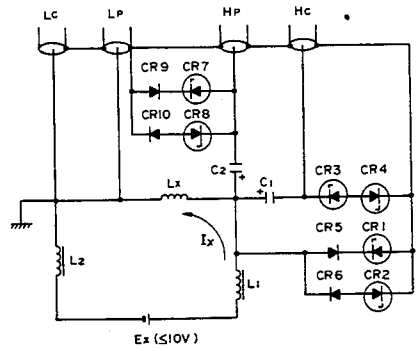


**Figure D. Low-grounded Measurement**

where Lx : Sample inductor

$L_1$ : ( 50 ~ 250) X Lx

$L_2$ : ≃ $L_1$

Ex : External dc bias voltage (≦ 10V)

Ix : External dc bias current

Current Value:

$$Ix = \frac{Ex}{\text{Output Resistance of Ex} + \text{ESR of } L_1 + \text{ESR of } L_2}$$

$C_1$ : Blocking capacitor

Capacitance Value :

$C_1 \geqq \frac{1}{10\pi \cdot f}$ (f : measuring frequency (Hz))

DC Withstand Voltage : > Ex.

$C_2$ : Blocking capacitor

Capacitance Value : 1μF

DC Withstand Voltage : > Ex.

$CR_1$, $CR_2$ : HP Part No. : 1902–0202
Diode-Zener, 15V5%, 1W
$CR_3$, $CR_4$ : HP Part No. : 1902–0176
Diode-Zener, 47V5%, 1W
$CR_5$, $CR_6$ : HP Part No. : 1901–0646
Diode-Power, 200V, 1A
$CR_7$, $CR_8$ : HP Part No. : 1902–1299
Diode Zener, 3.3V5%, 1W
$CR_9$, $CR_{10}$ :HP Part No. : 1901–0646
Diode-Power, 200V, 1A

CAUTION

**NEVER apply an external dc bias current of over 1A and NEVER remove the DUT when a dc current of over 25mA is flowing. To do so may damage the instrument.**

c. Set the 4192A's controls as necessary for an impedance measurement. Refer to Figure 3-30, but following settings should be made.

DISPLAY A Function ..... L
BIAS ..... OFF

d. Apply desired dc bias current to the sample inductor with external dc bias source.

e. Read the inductance value – on DISPLAY A – after allowing time for bias voltage to settle.

**Figure 3-34. External DC Voltage Supply (Sheet 2 of 2)**

### 3-109. HP-IB INTERFACE

3-110. The 4192A can be remotely controlled via the HP-IB, a carefully defined instrument interface which simplifies integration of instruments and a calculator or computer into a system.

*Note: HP-IB is Hewlett-Packard's implementation of IEEE Std. 488, Standard Digital Interface for Programmable Instrumentation.*

### 3-111. Connection to HP-IB

3-112. The 4192A can be connected into an HP-IB bus configuration with or without a controller (i.e., with or without an HP calculator). In an HP-IB system without a controller, the instrument functions as a "talk only" device (refer to paragraph 3-117.)

### 3-113. HP-IB Status Indicators

3-114. The HP-IB Status Indicators are four LED lamps located on the front panel. When lit, these lamps show the existing status of the 4192A in the HP-IB system as follows:

| | |
|---|---|
| SRQ: | SRQ signal from the 4192A to the controller is on the HP-IB line. Refer to paragraph 3-127. |
| LISTEN: | The 4192A is set to listener. |
| TALK: | The 4192A is set to talker. |
| REMOTE: | The 4192A is remotely controlled. |

### 3-115. LOCAL Key

3-116. The LOCAL key releases the 4192A from HP-IB remote control and allows measurement conditions to be set from the front-panel. The REMOTE lamp will go off when this key is pressed. LOCAL control is not available when the 4192A is set to "local lockout" status by the controller.

### 3-117. HP-IB Control Switch

3-118. The HP-IB Control Switch, located on the rear panel, has seven bit switches as shown in Figure 3-35. Each bit switch has two settings: logical 0 (down position) and logical 1 (up position).

The left-most bit switch, bit 7, determines whether the instrument will be addressed by the controller in a multi-device system, or will function as a "talk only" device to output measurement data and/or instructions to an external "listener" e.g., printer. When bit switch 7 is set to 0, the instrument is in ADDRESSABLE mode and bit switches 1 through 5 determine the instrument address; when this bit switch is set to 1, the instrument is in TALK ONLY mode.
Bit switch 6 determines the output data delimiter. When this bit switch is set to 0, the delimiter is a comma (,); when set to 1, the delimiter is a carriage return and line feed (CR/LF). Refer to Figure 3-36 for the function of each delimiter.

Bit switches 1 through 5 are used to set the HP-IB address, in binary, of the 4192A when bit switch 7 is set to ADDRESSABLE.

*Note: The HP-IB Control Switch, as set at the factory, is shown in Figure 3-35.*

*When the 4192A is turned on, the HP-IB address is displayed, in decimal, on DISPLAY A. For example, the factory-set address is displayed as "H-17".*

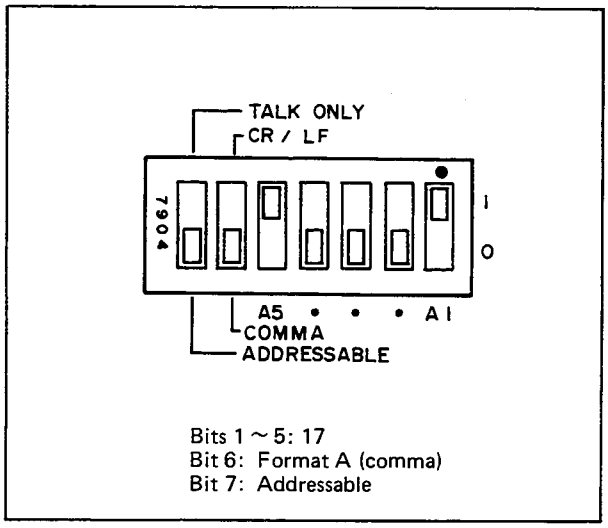


**Figure 3-35. HP-IB Control Switch**

### 3-119. HP-IB Interface Capabilities

3-120. The 4192A has eight HP-IB interface functions, as listed in Table 3-22.

### 3-121. Remote Program Code

3-122. Remote program codes for the 4192A are listed in Table 3-23.

**Table 3-22. HP-IB Interface Capabilities**

| Code | Interface Function* (HP-IB Capabilities) |
|---|---|
| SH1** | Source Handshake |
| AH1 | Acceptor Handshake |
| T5 | Talker (basic talker, serial poll, talk only mode, unaddress to talk if addressed to listen) |
| L4 | Listener (basic listener, unaddress to listen if addressed to talk) |
| SR1 | Service Request |
| RL1 | Remote/local (with local lockout) |
| DC1 | Device Clear |
| DT1 | Device Trigger |

* Interface functions provide the means for a device to receive, process, and transmit messages over the bus.

** The suffix number of the interface code indicates the limitation of the function capability as defined in Appendix C of IEEE Std. 488.

**Table 3-23. Remote Program Code**

| Item | Control | Program Code | Description |
|---|---|---|---|
| Deviation Measurement for DISPLAY A | OFF<br>Δ<br>Δ% | AN*1<br>AD<br>AP | |
| Deviation Measurement for DISPLAY B | OFF<br>Δ<br>Δ% | BN*1<br>BD<br>BP | |
| DISPLAY A Function | Z / Y<br>R/G<br>L<br>C<br>B–A (dB)<br>A (dBm/dBV)<br>B (dBm/dBV) | A1*1<br>A2<br>A3<br>A4<br>A5<br>A6<br>A7 | Combinations of A and B are listed in the table below: |
| DISPLAY B Function | θ (deg)<br>θ (rad)<br>X/B<br>Q<br>D<br>R/G<br>GROUP DELAY<br>θ (deg)<br>θ (rad) | B1*1<br>B2<br>B1 ~ B3<br>B1<br>B2<br>B3<br>B1<br>B2<br>B3 | |

| A \ B | 1 | 2 | 3 |
|---|---|---|---|
| 1 | \|Z\|/\|Y\| – θ (deg) | \|Z\|/\|Y\| – θ (rad) | |
| 2 | R/G – X/B* | | |
| 3 | L – Q | L – D | L – R/G |
| 4 | C – Q | C – D | C – R/G |
| 5 | B – A (dB) – GROUP DELAY | B – A (dB) – θ (deg) | B – A (dB) – θ (rad) |
| 6 | A(dBm/dBV) * | | |
| 7 | B(dBm/dBV) * | | |

* Program code for DISPLAY B is not necessary.

**Table 3-23. Remote Program Code (Sheet 2 of 3)**

| Item | Control | Program Code | Description |
|---|---|---|---|
| Recall Parameter | SPOT FREQ.<br>STEP FREQ.<br>START FREQ.<br>STOP FREQ.<br>SPOT BIAS<br>STEP BIAS<br>START BIAS<br>STOP BIAS<br>OSC LEVEL<br>REF A<br>REF B | FRR*1<br>SFR<br>TFR<br>PFR<br>BIR<br>SBR<br>TBR<br>PBR<br>OLR<br>RAR<br>RBR | |
| TEST LEVEL MONITOR*2 | V<br>mA | TV<br>TA | |
| Key Status Save (Memory) | SAVE 0<br>SAVE 1<br>SAVE 2<br>SAVE 3<br>SAVE 4 | SA0<br>SA1<br>SA2<br>SA3<br>SA4 | |
| Saved Key Status Recall | RCL 0<br>RCL 1<br>RCL 2<br>RCL 3<br>RCL 4 | RC0<br>RC1<br>RC2<br>RC3<br>RC4 | |
| DC BIAS*2 | OFF | I0*1 | |
| ZERO OPEN*2 | OFF<br>ON | ZO0*1<br>ZO1 | |
| ZERO SHORT*2 | OFF<br>ON | ZS0*1<br>ZS1 | |
| AVERAGE | OFF<br>ON | V0*1<br>V1 | |
| HIGH SPEED | OFF<br>ON | H0*1<br>H1 | |
| SELF TEST | ON | S1 | |
| X-Y RECORDER | OFF<br>ON<br>Lower Left<br>Upper Right | X0*1<br>X1<br>LL<br>UR | "LL" and "UR" cannot be used when the X-Y Recorder function is set to ON (X1). |

**Table 3-23. Remote Program Code (Sheet 3 of 3)**

| Item | Control | Program Code | Description |
|---|---|---|---|
| STORE DISPLAY A/B | | SD | |
| LOG SWEEP | OFF<br>ON | G0*1<br>G1 | |
| SWEEP ABORT | | AB | |
| SWEEP | MANUAL<br>AUTO | W0*1<br>W1 | |
| MANUAL SWEEP | STEP UP<br>STEP DOWN | W2<br>W4 | W2 and W4 act as STEP UP and STEP DOWN when the SWEEP mode is set to MANUAL (W0). |
| AUTO SWEEP | START UP<br>PAUSE<br>START DOWN | W2<br>W3<br>W4 | W2 and W4 act as START UP and START DOWN when the SWEEP mode is set to AUTO (W1). |
| CIRCUIT MODE*2 | AUTO<br>Series<br>Parallel | C1*1<br>C2<br>C3 | |
| GAIN MODE | dBm<br>dBV | N1<br>N2 | These programming codes cannot be used when DISPLAY A function is set to A1, A2, A3, or A4. |
| ZY RANGE*2 | 1Ω/10S<br>10Ω/1S<br>100Ω/100mS<br>1kΩ/10mS<br>10kΩ/1mS<br>100kΩ/100μS<br>1MΩ/10μS<br>AUTO | R1<br>R2<br>R3<br>R4<br>R5<br>R6<br>R7<br>R8*1 | Remote programming code R1 cannot be used with some SPOT FREQ/OSC LEVEL settings. |
| TRIGGER | INT<br>EXT<br>HOLD/MANUAL | T1*1<br>T2<br>T3 | These code only set the TRIGGER mode; they do not trigger the instrument. |
| Data Ready | OFF<br>ON | D0*1<br>D1 | If Data Ready is set to ON, an SRQ signal is output when the measurement is completed. |
| Output Data Format | Displays A/B<br>Displays A/B/C | F0*1<br>F1 | Refer to paragraph 3-125 and Figure 3-36. |
| Execute | | EX | This code is used to trigger the instrument. |

*1 : Default code.
*2 : These programming codes cannot be used when DISPLAY A function is set to A5, A6, or A7.

### 3-123. Parameter Setting

3-124. The 4192A can be set to eleven parameters (refer to Table 3-24) by remote programming as follows:

$$\underset{(1)}{XX} \pm \underset{(2)}{NNNN.NNNN} \underset{(3)}{EN}$$

(1) Program code for parameter setting (refer to Table 3-24).

(2) Setting value (numeric or space). 8 digits, lesser digits are ignored.

(3) Enter. Unit is kHz for SPOT FREQ, START FREQ, STEP FREQ, and STOP FREQ; V for SPOT BIAS, STEP BIAS, STOP BIAS, and OSC LEVEL. (REF A, REF B).

### 3-125. Data Output

3-126. The 4192A outputs measurement and status data to external devices in bit parallel, byte serial format via the eight DIO signal lines of the HP-IB. These data include status data, key status (function) data, deviation measurement mode data, and measurement data (including range) for DISPLAY A and DISPLAY B. When program code "F1" is used, DISPLAY C data (unit and value) are output with DISPLAY A and DISPLAY B data. The output format is shown in Figure 3-36. All characters are coded in accordance with ASCII coding conventions. To output DISPLAY A/B/C data without an HP-IB controller, internal Control Switch (A6S2 bit 4) must be set to 1. Refer to paragraph 3-139 and Table 3-28.

**Table 3-24. Program Codes for Parameter Setting**

| Parameters | Program Code | Setting Value |
|---|---|---|
| SPOT FREQ | FR | Setting Range: 0.005000 kHz ~ 13000.000 kHz.<br>Resolution: 0.000001 kHz (0.005000 kHz ~ 9.999999 kHz),<br>0.00001 kHz (10.00000 kHz ~ 99.99999 kHz),<br>0.0001 kHz (100.0000 kHz ~ 999.9999 kHz),<br>0.001 kHz (1000.000 kHz ~ 13000.000 kHz). |
| START FREQ | TF | |
| STOP FREQ | PF | |
| STEP FREQ | SF | Setting Range: 0.000001 kHz ~ 13000.000 kHz.<br>Resolution: 0.000001 kHz (0.000001 kHz ~ 9.999999 kHz),<br>0.00001 kHz (10.00000 kHz ~ 99.99999 kHz),<br>0.0001 kHz (100.0000 kHz ~ 999.9999 kHz),<br>0.001 kHz (1000.000 kHz ~ 13000.000 kHz). |
| SPOT BIAS | BI | Setting Range: -35.00 V ~ +35.00 V<br>Resolution: 0.01 V |
| START BIAS | TB | |
| STOP BIAS | PB | |
| STEP BIAS | SB | Setting Range: 0.01 V ~ 35.00 V<br>Resolution: 0.01 V |
| OSC LEVEL | OL | Setting Range: 0.005 V ~ 1.100 V<br>Resolution: 0.001 V (0.005 V ~ 0.100 V),<br>0.005 V (0.100 V ~ 1.100 V). |
| REF A<br>REF B | RA<br>RB | Setting Range: -19999 ~ +19999.<br>Resolution: The position of the decimal point depends on the value displayed on the corresponding display. For example, if the value displayed on DISPLAY A is 1.9999, any value between 0.0001 and 1.9999 can be entered as the REF A (RA) value. |

① DISPLAY A/B (Default mode or set using HP-IB remote program code "F0")

XXXX±NNN.NNE±NN,XXXX±NNN.NNE±NN CR LF
(1) (2) (3) (4) (5) (6)(7) (8) (9) (10) (11) (12)

② DISPLAY A/B/C (Set using HP-IB remote program code "F1")

XXXX±NNN.NNE±NN,XXXX±NNN.NNE±NN,X±NNNNN.NNN CR LF
(1) (2) (3) (4) (5) (6)(7) (8) (9) (10) (11) (6)(13) (14) (12)

(1) Status of DISPLAY A

(2) Function of DISPLAY A

(3) Deviation measurement mode of DISPLAY A

(4) Value of DISPLAY A (position of decimal point is coincident with display)

(5) Unit of DISPLAY A

(6) Comma (data delimiter)

(7) Status of DISPLAY B

(8) Function of DISPLAY B

(9) Deviation measurement mode of DISPLAY B

(10) Value of DISPLAY B (position of decimal point is coincident with display)

(11) Unit of DISPLAY B

(12) Data Terminator

(13) Unit of DISPLAY C (Test Parameter Data Display)

(14) Value of DISPLAY C

*Notes: 1. The data delimiter, bit switch 6 on the HP-IB Control Switch (Figure 3-30), is set at the factory to comma (,). This causes the 4192A to output all data (DISPLAY A data, DISPLAY B data, and, if program code F1 is used, DISPLAY C data) as a continuous string. When the data delimiter is set to CR/LF, a carriage return and line feed signal is output after each field. This is useful when outputting data to certain peripherals, such as a printer.*

*2. Status, function, and deviation measurement mode data of DISPLAY A and DISPLAY B, and the units of DISPLAY C are output as one or two alphabetic characters, as listed in Table 3-25.*

*3. Ranges of DISPLAY A and DISPLAY B are expressed as an exponent as follows:*

$10^{-12}$ (p) ..... E-12
$10^{-9}$ (n) ..... E-09
$10^{-6}$ ($\mu$) ..... E-06
$10^{-3}$ (m) ..... E-03
$10^{0}$ ..... E+00
$10^{3}$ (k) ..... E+03
$10^{6}$ (M) ..... E+06

**Figure 3-36. Data Output Format for the 4192A**

**Table 3-25. Data Output Codes**

| Item | Information | Code |
|---|---|---|
| Data Status of DISPLAY A/B | Normal | N |
| | Overflow | O |
| | Uncalibration | U |
| Function of DISPLAY A | Z | ZF |
| | Y | YF |
| | R | RF |
| | G | GF |
| | L ( ) | LS |
| | L ( ) | LP |
| | C ( ) | CS |
| | C ( ) | CP |
| | B – A (dB) | BA |
| | A (dBV) | AV |
| | B (dBV) | BV |
| | A (dBm) | AM |
| | B (dBm) | BM |
| Deviation Measurement Mode of DISPLAY A/B | Normal Measurement | N |
| | Deviation Measurment | D |
| | Deviation Measurement in Percent | P |
| Function of DISPLAY B | $\theta$ (deg) | TD |
| | $\theta$ (rad) | TR |
| | X | XF |
| | B | BF |
| | Q | QF |
| | D | DF |
| | R | RF |
| | G | GF |
| | GROUP DELAY | GD |
| | Unmeasure | UM |
| Unit of DISPLAY C | kHz | K |
| | V | V |
| | mA | M |
| | Reference Data | R |

### 3-127. Service Request Status Byte

3-128. The 4192A outputs an RQS (Request Service) signal whenever bit 1, 2, 3, 4, or 6 of Service Request Status Byte is set. The make-up of the Status Byte is shown in Figure 3-37.

| Bit | 8 | 7 | 6 | 5 | 4 | 3 | 2 | 1 |
|---|---|---|---|---|---|---|---|---|
| Information | 0 | 0/1 | 0/1 | 0/1 | 0/1 | 0/1 | 0/1 | 0/1 |

Bit 7 (RQS) indicates whether or not a service request exists. Bit 8 is always zero (0). Bits 1 thru 4 and 6 identify the type of service request. Following are the service request states of the 4192A.

Bit 1: (1) If Data Ready is set to ON, this bit is set when measurement data is provided.
(2) If Self Test is set to ON, this bit is set when the instrument passes the Self Test.

Bit 2: This bit is set when the 4192A receives an erroneous remote program code.

Bit 3: This bit is set when the 4192A receives an illegal front-panel control setting via the program.

Bit 4: This bit is set when the 4192A receives a trigger signal before the last measurement is completed.

Bit 6: (1) This bit is set when the 4192A has a hardware error.
(2) If Self Test is set to ON, this bit is set when the instrument fails the Self Test.

Bit 5 is independent of bit 7 (RQS signal). This bit is set when auto sweep measurement, self test, or zero offset adjustment is being performed and is reset when the next trigger comes.

**Figure 3-37. Status Byte for the 4192A**

### 3-129. Programming Guide for 4192A

3-130. Sample programs for HP Model 9825A/9835A Desktop Computers are provided in Figures 3-38 and 3-39. These programs are listed in Table 3-26.

*Notes:*

1. *Specific information for HP-IB programming with the 9825A or 9835A are provided in the 9825A or 9835A programming manual .*

2. *Equipment required for these sample programs includes:*

   *4192A LF Impedance Analyzer*
   *98034A HP-IB Interface Card*
   *9825A Desktop Computer with 98210A String-Advanced Programming ROM 98213A General I/O + Extended I/O ROM.*
   *or*
   *9835A Desktop Computer with 98332A General I/O ROM*

**Table 3-26. Sample Program using 9825A/9835A**

| Sample Program | Figure | Description |
|---|---|---|
| 1 | 3-38 | Remote control and data output in spot measurement. |
| 2 | 3-39 | Remote control and data output in auto sweep measurement. |

**Sample Program 1**

Description:

This program is a remote control, data output program for spot measurements.
The program has three capabilities:

(1) Control of the 4192A via HP-IB

(2) Trigger of the 4192A via HP-IB

(3) Data output from the 4192A in spot measurement via HP-IB

9825A Program

```
0: flt4
1: wrt717,"A1B1T3 F1"
     (1)(2)    (3)
2: wrt717, "FR10EN"
             (4)  (5)
3: wrt717, "EX"
     (6)
4: red717, A, B, C
5: dspA, B, C
6: prtA, B, C
7: end
```

9835A Program

```
10 FLOAT4
20 OUTPUT717; "A1B1T3 F1"
     (1)(2)     (3)
30 OUTPUT717; "FR10EN"
              (4)  (5)
40 OUTPUT717; "EX"
     (6)
50 ENTER717; A, B, C
60 DISP A, B, C
70 PRINT A, B, C
80 END
```

(1) Select Code of 98034A.

(2) Address of 4192A.

(3) Program codes of the 4192A (refer to Table 3-23).

(4) Program codes for parameter setting of the 4192A (refer to Table 3-24).

(5) Parameter terminator of the 4192A (refer to paragraph 3-123).

(6) This is equivalent to

9825A: trg717
9835A: TRIGGER717

By using string variables, complete output information from the 4192A is stored by the following programs:

9825A Program:

```
0: clr 717
1: dimA$[50]
2: wrt717, "A1B1T3 F1"
3: wrt717, "FR10EN"
4: wrt717, "EX"
5: red717, A$
6: dspA$
7: prtA$
8: end
```

9835A Program:

```
5  CLEAR 717
10 DIMA$[50]
20 OUTPUT717; "A1B1T3 F1"
30 OUTPUT717; "FR10EN"
40 OUTPUT717; "EX"
50 ENTER717; A$
60 DISP A$
70 PRINT A$
80 END
```

**Figure 3-38. Sample Program 1 Using 9825A/9835A**

**Sample Program 2**

Description:

This program is a remote control, data output program for auto sweep measurements.

The program has three capabilities:

(1) Control of auto sweep measurement of the 4192A via HP-IB

(2) Auto sweep of the 4192A via HP-IB

(3) Data output from the 4192A via HP-IB

9825A Program:

```
0 : dim A$[100,50]
          (1)
1 : wrt 717, "A1B1T3 F1"
2 : wrt 717, "SF1ENTF1ENPF100EN"
3 : wrt 717, "W1 W 2 "
4 : 0 → I
5 : I+1 → I
6 : wrt 717, "EX"
7 : rds (717) → A
        (2)
8 : if bit (4, A) ≠1; gto12
          (3)
9 : red 717, A$[I]
10 : dsp A$[I]
11 : gto5
12 : end
```

9835A Program:

```
10  DIMA$ (100) [50]
           (1)
20  OUTPUT 717; "A1B1T3 F1"
30  OUTPUT 717; "SF1ENTF1ENPF100EN"
40  OUTPUT 717; "W1 W 2 "
50  I=0
60  I=I+1
70  OUTPUT 717; "EX"
80  STATUS 717; A
          (2)
90  IF BIT (A, 4) ≠1 THEN130
          (3)
100 ENTER 717; A$(I)
110 DISP A$ (I)
120 GOTO60
130 END
```

(1) Dimensions a string variable array that has more elements than the number of measurement points.

(2) Inputs 4192A SRQ Status Byte to variable A.

(3) When AUTO SWEEP is being performed, bit 4 of variable A (bit 5 of the SRQ Status Byte) is set to "1" (refer to Figure 3-37).

*Note: If the 9835A program is used with high speed controller, wait command should be put between lines 70 and 80.*

**Figure 3-39. Sample Program 2 Using 9825A/9835A**

## 3-131. X-Y RECORDER OUTPUT

3-132. The 4192A is equipped with three analog RECORDER OUTPUT connectors on the rear-panel. These connectors output accurate voltages for recording measured sample values as functions of frequency or bias. A PEN LIFT connector is also provided on the rear-panel to control the X-Y recorder's pen. The procedures for using the 4192A's X-Y recorder capability are given in Figure 3-40.

### 3-133. Analog Outputs

3-134. The analog output voltage of DISPLAY A, DISPLAY B, and FREQ/BIAS are provided in the following manner. The output accuracy is ±0.5% of output voltage +20mV.

(1) DISPLAY A connector
Outputs voltage proportional to the value displayed on DISPLAY A. Normalized value is 1V (depends on function as follows):

① Z, Y, R and G : (Full Scale Value of Display Range) × 1.3

② L and C : (Full Scale Value of Display Range) × 2.0

③ B – A, A and B : 100dB

④ Δ% : 100%

⑤ Δ : Full Scale Value of Setting Function Range

(2) DISPLAY B connector
Outputs voltage proportional to the value displayed on DISPLAY B. Normalized value is 1V (depends of function as follows):

① $\theta$ (deg) : 180°

② $\theta$ (rad) : $\pi$

③ X and B : (Full Scale Value of Display Range) × 1.3

④ D, Q, R, G and GROUP DELAY : (Full Scale Value of Display Range) × 2.0

⑤ Δ% : 100%

⑥ Δ : Full Scale Value of Setting Function Range

*Note: When OF1, OF2, UCL, or – – – is displayed on DISPLAY A or DISPLAY B, 1V is output from the corresponding RECORDER OUTPUT connector on the rear-panel.*

(3) FREQ/BIAS connector
Outputs voltage proportional to the test frequency or internal dc bias voltage and normalized by following equations (1Vmax):

① Bias Voltage:

$$\frac{\text{SPOT BIAS} - \text{START BIAS}}{\text{STOP BIAS} - \text{START BIAS}}$$

② Measuring Frequency (Linear Sweep):

$$\frac{\text{SPOT FREQ} - \text{START FREQ}}{\text{STOP FREQ} - \text{START FREQ}}$$

③ Measuring Frequency (Logarithmic Sweep):

$$\frac{\log(\text{SPOT FREQ} - 10^{m-1})}{\log(10^{n} - 10^{m-1})}$$

where $10^{m-1} \leqq \text{START FREQ} < 10^{m}$,
$10^{n-1} \leqq \text{STOP FREQ} < 10^{n}$.

*Notes:*
1. *When the parameter displayed on the Test Parameter Data Display is not the measuring frequency or internal dc bias voltage, the output voltage from the FREQ/BIAS connector does not change.*
2. *Figure 3-41 shows the plot areas for all parameter settings of DISPLAY A, DISPLAY B and FREQ/BIAS connectors.*

### 3-135. Control Capabilities for Analog Output

3-136. The X-Y RECORDER OUTPUTS function of the 4192A provides the following control capabilities to plot the characteristics curve of the sample easily, quickly and clearly.

(1) Control of Pen Position on the X-Y Recorder
Zero adjustment and sensitivity adjustment of the X-Y recorder can be performed using the following control keys on the front-panel of the 4192A.

① ↓← LL : DISPLAY A, DISPLAY B and FREQ/BIAS connectors output 0V.

② UR →↑ : DISPLAY A, DISPLAY B and FREQ/BIAS connectors output 1V.

*Notes:*

1. *The X-Y RECORDER ON/OFF key should be set to OFF (indicator lamp off) when the X-Y recorder zero adjustment or sensitivity adjustment is performed. In this case, ↓← LL is set automatically.*
2. *Figure 3-41 shows the positions of ↓← LL and UR →↑ in the plot areas for all parameter settings of DISPLAY A, DISPLAY B, and FREQ/BIAS connectors.*

(2) Control Signals for X-Y Recorder Pen Lift TTL Controls

When the X-Y recorder is equipped with pen lift TTL controls, pen lift can be done automatically by the TTL level output from the PEN lift connector on the 4192A's rear-panel. When the pen lift signal is LOW (TTL), the X-Y recorder pen is down. When the pen lift signal is HIGH (TTL), the X-Y recorder pen is up.

*Note: When the SWEEP ABORT, ↓← LL or UR →↑ key is pressed, the X-Y recorder pen is up.*

(3) Interpolation

The X-Y recorder function of the 4192A provides automatic interpolation of all three RECORDER OUTPUTS to ensure distortion free, accurate plots on the X-Y recorder. Maximum interpolation time, the time required for the three RECORDER OUTPUTS to go from 0V (↓← LL) to 1V (UR →↑), is approximately 30 seconds.

*Note: Interpolation is performed for all three RECORDER OUTPUTS, even though only two are connected to the X-Y recorder. Actual interpolation time is determined by the largest change among the three outputs. Consequently, if the unconnected RECORDER OUTPUT has the largest change, interpolation time is determined by this RECORDER OUTPUT, not the other two, whose change may be very small.*

**EQUIPMENT:**

| | |
|---|---|
| X-Y Recorder | HP 7090A |
| BNC (Male) – Dual Banana Plug Cable | HP11001A (3 ea.) |

**PROCEDURE:**

(1) Turn the 4192A and X-Y recorder off.

(2) Connect the X-axis connector and Y-axis connector (Y1-axis and Y2-axis for two-pen X-Y recorders) of the X-Y recorder to the appropriate RECORDER OUTPUT connectors on the 4192A rear-panel with the BNC (Male) – Dual Banana Plug Cable. Refer to Table 3-27 for cabling method of the RECORDER OUTPUTS.

(3) When X-Y recorder is provided with pen lift TTL controls, connect PEN LIFT connector on the 4192A rear-panel to the X-Y recorder connector.

(4) Set the 4192A's controls for the desired swept measurement in accordance with the procedures given in the following figures:

- Figure 3-11. Operating Instructions for Swept-frequency Amplitude-phase Measurements
- Figure 3-31. Operating Instructions for Swept-frequency Impedance Measurement
- Figure 3-33. Operating Instructions for Swept-bias Voltage Impedance Measurement

(5) Turn the 4192A and X-Y recorder on.

(6) Place recording paper on X-Y recorder platen and set the paper hold down function (if provided).

**Figure 3-40. X-Y Recorder Output (Sheet 1 of 2)**

(7) Confirm that the 4192A X-Y RECORDER OUTPUT function is set to off (X-Y RECORDER ON/OFF indicator on the front-panel should be off). If it is set to on (indicator lamp on), turn it off by pressing the BLUE key and X-Y RECORDER ON/OFF key.

(8) Select the appropriate plot area for parameters to be recorded from illustrations in Figure 3-41 (refer to Table 3-27).

(9) Press the BLUE key and the LL key on the front-Panel of the 4192A.

(10) Adjust X-Y recorder zero adjustment controls for X and Y channels so that the recorder pen is positioned just above the chart paper coordinates denoted by the black spot ( ) in the illustration.

(11) Press the BLUE key and the UR key on the front-panel of the 4192A.

(12) Adjust the X-Y recorder controls for the X and Y channels so the the recorder pen is positioned just above the chart paper coordinates denoted by circle (A) in the illustration.

Note: X-Y recorder zero adjustment and sensitivity adjustment may be interactive. So, repeat steps (9) (12) to satisfy both adjustments.

(13) Perform an auto sweep measurement with the X-Y RECORDER OUTPUT function off. Note the frequency (or bias voltage) at which the measured value displayed on DISPLAY A is highest.

Note: Step (13) is not necessary when making a manual sweep.

(14) Set the SPOT FREQ (or SPOT BIAS) to the value noted in step (13). (For manual sweep, set the SPOT value to the START value.)

Note: Steps (13) and (14) insure that the DISPLAY A X-Y RECORDER OUTPUT is correctly scaled for the highest DISPLAY A range that will be used during the auto sweep measurement. When the AUTO SWEEP START key is pressed, DISPLAY A ranging (Z-Y RANGE) is automatically set to AUTO mode, even if MANUAL mode is selected before pressing the AUTO SWEEP START key. The DISPLAY A range will change in accordance with the measured values. Scaling of the DISPLAY A X-Y RECORDER OUTPUT, however, will not change when the DISPLAY A range changes. It is automatically set to the DISPLAY A range in effect when the AUTO SWEEP function is turned on. If steps (13) and (14) are not performed, it may be impossible obtain an accurate plot of the measured values.

(15) Press the BLUE key and the X-Y RECORDER ON/OFF key to set the X-Y RECORDER OUTPUT function to on (the indicator lamp will come on).

(16) Press the AUTO SWEEP key. If the recorder is equipped with remote pen-lift control, go to step (17). If not, set the SPOT FREQ (BIAS) to the sweep START FREQ (BIAS) and then maunally lower the pen onto the paper.

(17) Perform the swept measurement in accordance with the procedure given in the figure selected in step (4).

(18) When the sweep is completed and the X-Y recorder stops, manually lift the pen from the paper. If the recorder is equipped with remote pen-lift control, the pen is raised automatically when the sweep is completed (or when the X-Y RECORDER OUTPUT function is turned off after a manual sweep).

(19) To repeat the measurement, repeat steps (14) through (18).

**Figure 3-40. X-Y Recorder Output (Sheet 2 of 2)**

**Table 3-27. Connections of Recorder Output**

| FREQ/BIAS | RECORDER OUTPUTS: DISPLAY B | RECORDER OUTPUTS: DISPLAY A | Plot Area*1 |
|---|---|---|---|
| Measurement Frequency/ Bias Voltage | | \|Z\|/ \|Y\|/R/G | ① |
| | | L/C | ② |
| | θ (deg) | | ③ |
| | θ (rad) | | ④ |
| | X/B | | ⑤ |
| | Q/D | | ② |
| | R/G | | ① |
| | X/B | R/G | ⑥ |
| Measurement Frequency | | B – A (dB) | ⑦ |
| | | A/B (dBm) | ⑧ |
| | | A/B (dBV) | ⑨ |
| | θ (deg) | | ③ |
| | θ (rad) | | ④ |
| | GROUP DELAY | | ② |
| Measurement Frequency/ Bias Voltage | | Δ | ⑩ |
| | | Δ% | ⑪ |
| | Δ | | ⑩ |
| | Δ% | | ⑪ |

* : These numbers match the numbers of the illustrations in Figure 3-41.

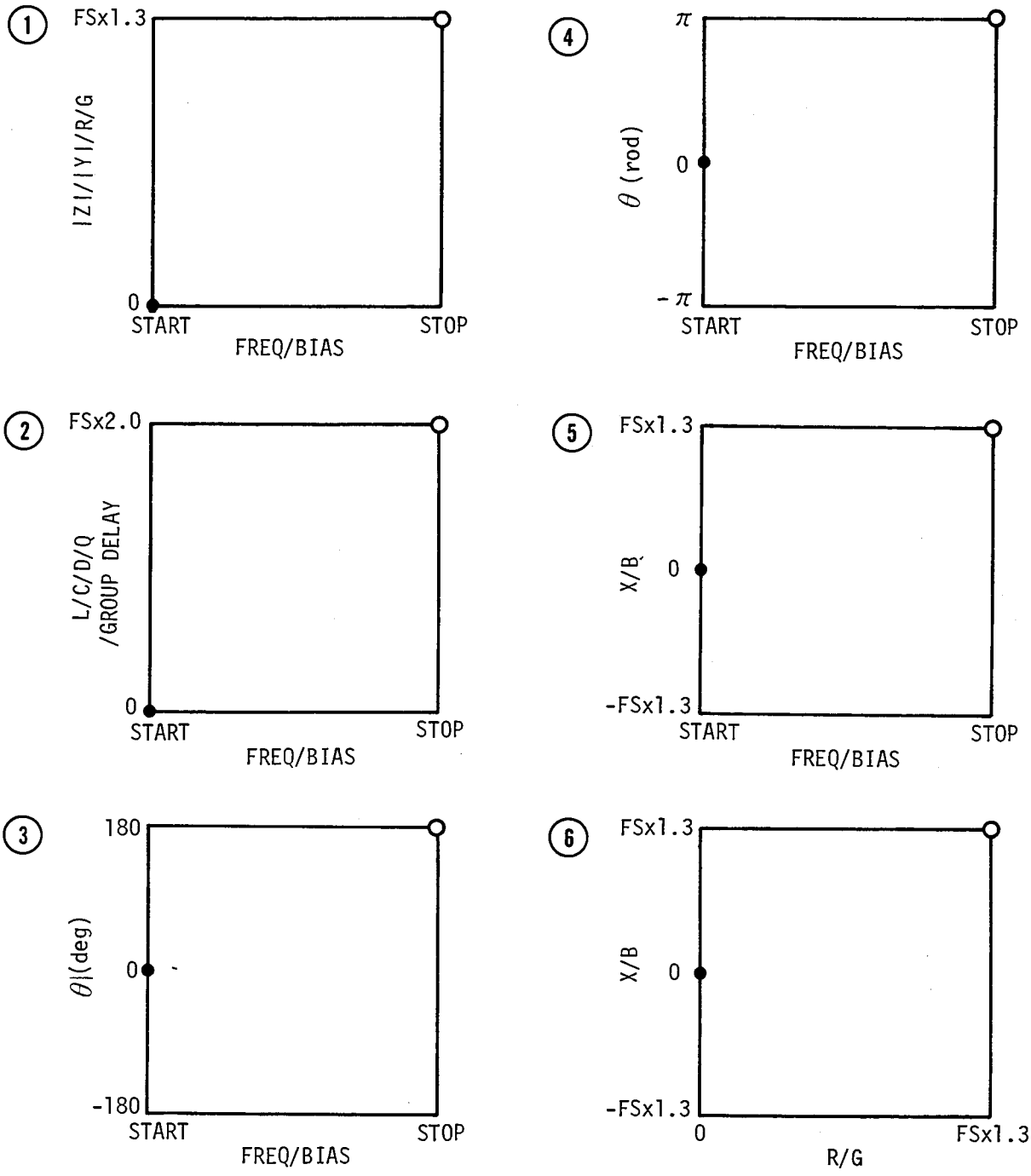


Note: FS : Full Scale Value of the Range
● : ↓← LL
○ : UR →↑

**Figure 3-41. Plot Areas of RECORDER OUTPUTS (sheet 1 of 2)**

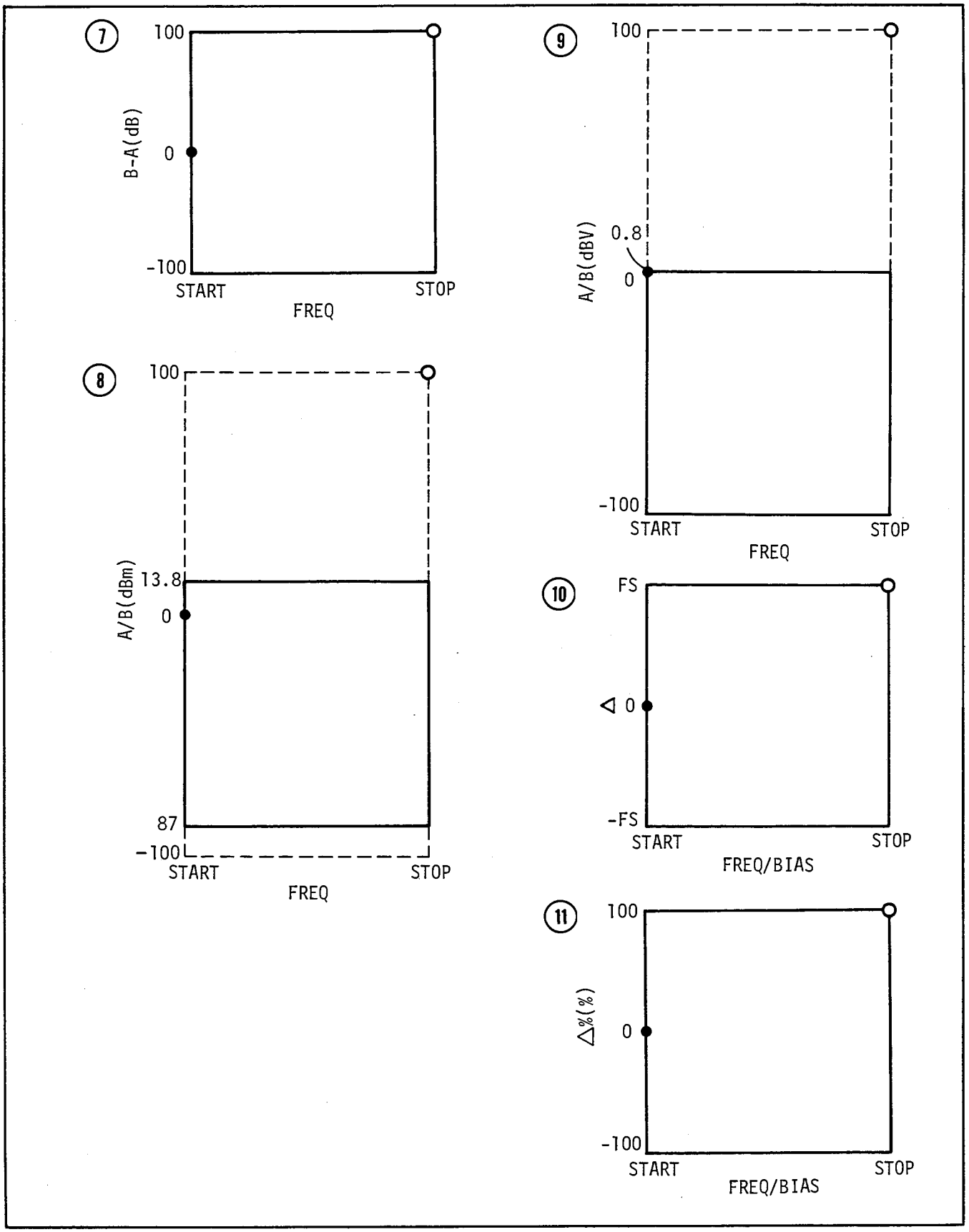


**Figure 3-41. Plot Areas of RECORDER OUTPUTS (sheet 2 of 2)**

## 3-137. EXTERNAL SYNTHESIZER

3-138. The 4192A can be connected to an external frequency synthesizer via the EXT VCO connector on the rear-panel instead of built-in frequency synthesizer to obtain a more accurate, stable test signal. Using this technique, a frequency resolution of 1 mHz over the full frequency range, from 5 Hz to 13 MHz, can be obtained. In addition, a high stability reference (1 MHz or 10 MHz) can be connected to EXT REFERENCE connector on the rear-panel to obtain an even more stable test signal. This capability permits stable measurements of the intrinsic characteristics of high Q devices. Such devices include crystals whose impedance change drastically with changes in frequency of only a few Hz.

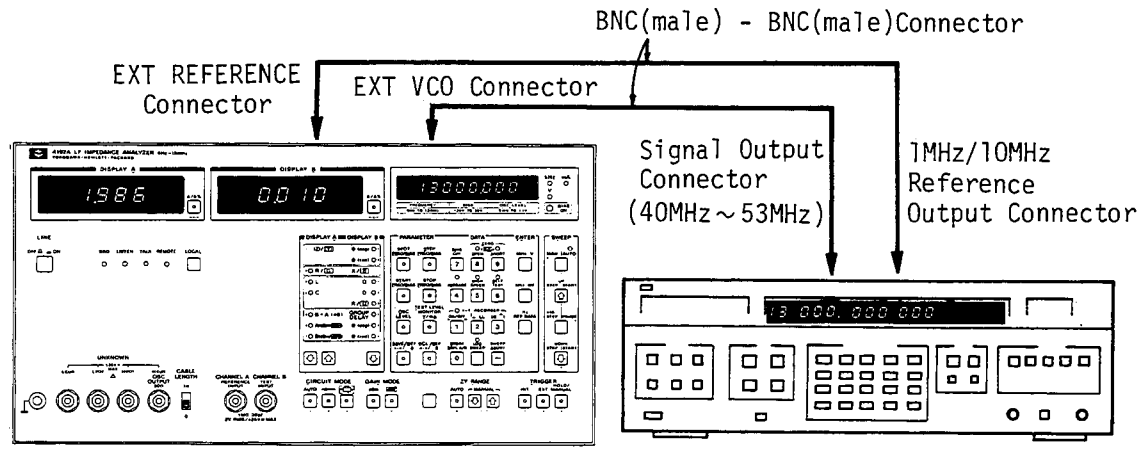


**EQUIPMENT:**

Synthesizer ..... HP3325A
BNC (Male) – BNC (Male) Cable (2 ea).

**PROCEDURE:**

(1) Turn the 4192A and synthesizer off.

(2) Remove the coaxial adapter, which connects the VCO OUTPUT terminal and EXT VCO terminal on the 4192A rear-panel.

(3) Connect the signal output terminal (output signal frequency: 40 MHz to 53 MHz) of the synthesizer to the EXT VCO terminal on the 4192A rear-panel with the BNC (male) – BNC (male) cable.

**Figure 3-42. External Synthesizer (Sheet 1 of 2)**

(4) Connect the 1MHz (or 10MHz) reference signal output terminal of the synthesizer to the EXT REFERENCE terminal on the 4192A rear-panel with the BNC (male) – BNC (male) cable.

(5) Set 4192A's controls for the desired measurement in accordance with procedures provided in the following figures:

- Figure 3-10. Basic Operating Instructions of the Amplitude-phase Measurements
- Figure 3-30. Basic Operating Instructions of the Impedance Measurements

(6) Turn on the synthesizer.

(7) Set the output signal of the synthesizer to 40MHz + desired measuring frequency.

(8) Set the SPOT FREQ of the 4192A to the desired measuring frequency.

*Notes: 1. Resolution of the test signal at the OSC OUTPUT terminal of the 4192A is 1mHz (at 5Hz to 10kHz), 10mHz (at 10kHz to 100kHz), 100mHz (at 100kHz to 1MHz), and 1Hz (at 1MHz to 13MHz). However, when an external synthesizer is used, resolution is 1mHz at all frequencies. Thus, to set a test frequency with a resolution higher than is normally possible (without external synthesizer), set the 4192A's SPOT FREQ as near to the desired frequency as possible. For example, for a test signal frequency of 50.000001kHz, set the external synthesizer to 50.000001kHz +40MHz and set the 4192A's SPOT FREQ to 50.00000kHz. The frequency of the test signal of the OSC OUTPUT terminal will be the frequency of the external synthesizer; however, the SPOT FREQ setting is used to calculate measurement parameter values (L, C, etc.), offset adjustment data, etc.*

*2. Values displayed on the 4192A's displays will fluctuate when measurement is made at frequencies set with 1mHz resolution at 10kHz to 78.125kHz.*

**Figure 3-42. External Synthesizer (Sheet 2 of 2)**

## 3-139. INTERNAL CONTROL SWITCH

3-140. Basic operation of the 4192A can be altered by changing the bit-switch settings of the internal control switch, A6S2. Refer to Table 3-28 for a description of the function of each bit-switch. Use the following procedure to gain access to the internal control switch:

(1) Turn off the instrument and disconnect the power cable.

(2) Remove the two plastic instrument-feet located at the upper corners of the rear-panel.

(3) Fully loosen the top cover retaining screw located at the rear of the top cover.

(4) Slide the top cover towards the rear and lift off.

**WARNING**

**POTENTIAL SHCOK HAZARD! DO NOT TOUCH ANY OF THE EXPOSED COMPONENTS! CAPACITORS MAY STILL BE CHARGED WITH HAZARDOUS VOLTAGE LEVELS, EVEN THOUGH POWER IS REMOVED FROM THE INSTRUMENT.**

(5) With the top cover removed, the A7, A8, and A10 board assemblies are visible. These boards are on a single mounting-plate which opens much like the hood of an automobile. The A6 board assembly, upon which the internal control switch is located, is mounted on the underside of this mounting-plate. To raise the mounting-plate, remove the six retaining screws and pull up the two plastic fasteners located toward the front of the mounting plate.

(6) Raise the mounting plate until it comes to rest at the rear of the instrument. Be sure that the safety catch locks in place.

(7) The internal control switch is located as shown in Figure 3-43. All bit-switches of A6S2 are normally set to 0. Set the switch as desired. Refer to Table 3-28.

*Note: Don't change the setting of A6S1. This switch is used for cable length compensation.*

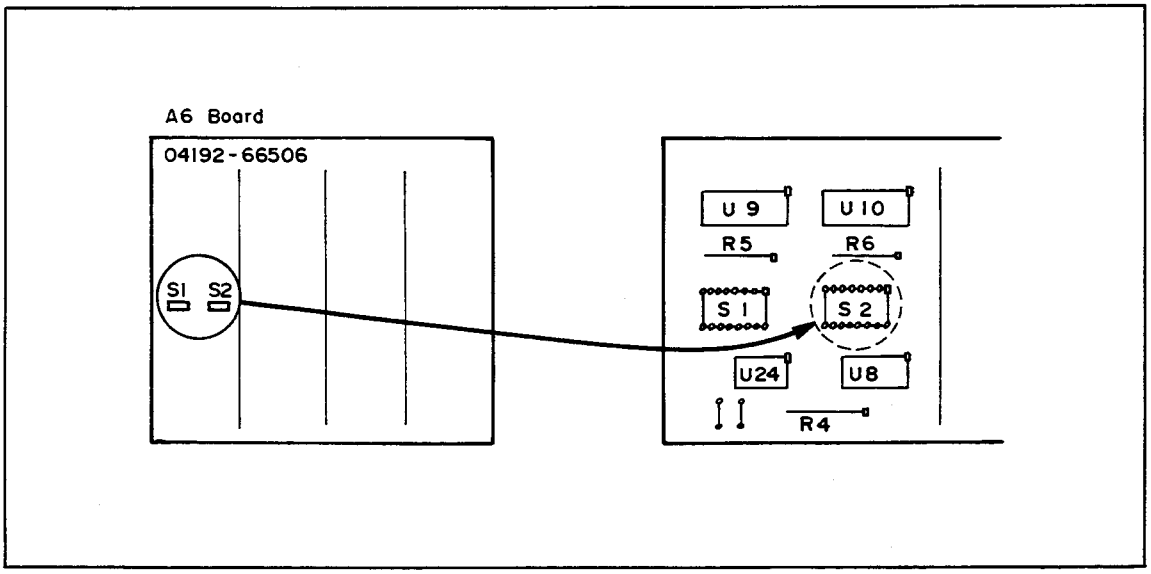


**Figure 3-43. A6S2 Internal Control Switch**

**Table 3-28. Internal Control Switch**

| Bit | Description |
|---|---|
| 0 | This bit-switch is related to the operation of the multi-slope integrator; it should be always set to 0. |
| 1 | When this bit is set to 1, DISPLAY B function is inhibited and measuring speed is increased. Measuring speed in this mode is given in paragraph 3-55 for amplitude/phase measurements and in paragraph 3-89 for impedance measurements. |
| 2 | This bit-switch is related to the operation of the multi-slope integrator; it should be always set to 0. |
| 3 | An HP-IB system, without controller, can be configured by connecting the 4192A to a (HP-IB control switch must be set to TALK ONLY and CR/LF*) printer (HP-IB control switch must be set to LISTEN ONLY), e.g., HP5150A Thermal Printer, with an HP-IB cable (refer to paragraph 3-117). When this bit is set to 1, the 4192A is triggered by the operation of the printer. |
| 4 | This bit is used to change the data output format from DISPLAY A/B to DISPLAY A/B/C, in the HP-IB system without controller (refer to paragraph 3-125). When this bit is set to 1 (4192A must be turned off and then back on after setting this bit-switch), data output format is set to DISPLAY A/B/C. |
| 5, 6 | These bit-switches are not used. |
| 7 | In normal operation, the number of display digits depends on the selected measurement function, measurement range, measurement frequency, OSC level, etc. When this bit is set to 1, however, all measured values are displayed with the maximum number of digits. |
| * After changing the setting of the HP-IB control switch, turn the instrument off and then back on. | |

**Table 4-1. Recommended Test Equipment**

| Equipment | Critical Specifications | Recommended Model | Use |
|---|---|---|---|
| Capacitance Standards | 1 pF ± 0.03%<br>10 pF ± 0.03%<br>100 pF ± 0.03%<br>1000 pF ± 0.03%<br>Useable frequency: Up to 13 MHz | HP16381A<br>HP16382A<br>HP16383A<br>HP16384A | P, A |
| Resistance Standards | 0Ω<br>0S<br>100Ω ± 0.03%<br>1 kΩ ± 0.03%<br>10 kΩ ± 0.03%<br>100 kΩ ± 0.03%<br>Useable frequency: Up to 13 MHz | HP16074A<br>Standard Resistor Set | P, A |
| Universal Counter | Maximum frequency: > 40 MHz<br>Resolution: 10 Hz at 40 MHz<br>Accuracy: 0.001% ($1 \times 10^{-5}$) | HP5314A | P, A |
| Digital DC Voltmeter | Voltage range: 10 mV to 100 V f.s.<br>Sensitivity: 100 μV<br>Accuracy: 0.05%<br>Input impedance: > 10 MΩ | HP3465A | P, A, T |
| Digital RF Voltmeter | Voltage range: 10 mV to 10 V rms f.s.<br>Bandwidth: 5 Hz to 13 MHz<br>Accuracy: 2% | HP3403C<br>W/OPT 001 | P, A |
| Spectrum analyzer | Frequency range: 100 Hz to 300 kHz<br>Noise: > 70 dB below reference | HP 141T DISPLAY SECTION<br>8556A LF SECTION<br>8552B IF SECTION | A |
| Resistor | 1 kΩ, 1/8 W | | A |
| Oscilloscope | Bandwidth: 100 MHz<br>Vertical sensitivity: 0.005 Volt/DIV | HP1740A | A, T |
| Cables | BNC (m)-to-BNC (m), 30 cm, 2 ea. | PN 8120-1838 | P, A |
| | BNC (m)-to-BNC (m), 61 cm, 2 ea. | PN 8120-1839 | P |
| | BNC (m)-to-BNC (m), 10 cm , 4 ea. | | P |
| | BNC (m)-to-BNC (m), 1 m | PN 8120-1840 | P, A |
| | BNC (m)-to-SMB | | A |
| | Dual Banana Plug-to-Alligator Clip | HP11002A | A, T |
| | Alligator Clip-to-Alligator Clip lead | | A |
| | BNC (m)-to-Dual Banana Plug Cable | HP11001A | A |

**Table 4-1. Recommended Test Equipment (Continued)**

| Equipment | Critical Specifications | Recommended Model | Use |
|---|---|---|---|
| Phase Standard | 1MHz | HP16344A | A |
| Probe | 1 : 1 | HP10007B | A |
| | 10MHz, 10 : 1 | HP10006D | A, T |
| Coaxial Step Attenuator | Attenuation range: 0dB to -70dB<br>Attenuation step: 10dB<br>Calibration Accuracy<br>at 50kHz, 1MHz, and 10MHz:<br>-10dB . . . . . ±0.03dB<br>-30dB . . . . . ±0.05dB<br>-50dB . . . . . ±0.07dB<br>-70dB . . . . . ±0.09dB | HP355D<br>(Calibrated)* | P |
| Test Fixture | | HP16047A | P |
| Adapter | BNC (m) (f) (f) Tee | hp P/N 1250-0781 | P, A |
| | BNC (m)-to-Dual Banana Plug | hp P/N 1250-1264 | A |
| Coaxial Termination | 50Ω Feedthrough Termination<br>BNC (m)-to-BNC (f), 2 ea. | PN 04192-61002 | P, A |
| Desk top Computer | | HP9825A | P |
| I/O ROM's | | HP98210A<br>HP98213A | |
| Interface, w/cable | | HP98034A | |
| Sample Capacitor | 1000pF ~ 1000nF | | |
| Signature Analyzer | | HP5004A | T |
| Logic Test Box w/Test ROM's | | HP16343A | T |

P: Performance Test, A: Adjustment, T: Troubleshooting

* Calibration service for the 355D at the frequencies listed above is provided by Hewlett-Packard's Stanford Park Division in US.
A new 355D, calibrated to meet the Critical Specifications listed above, can be purchased as a special option: Order 355D option J09.
For more information, contact the nearest Hewlett-Packard Sales Office.

# SECTION IV
# PERFORMANCE TESTS

## 4-1. INTRODUCTION

4-2. This section describes the tests and procedures used to verify the instrument specifications listed in Table 1-1. All tests can be performed without access to the interior of the instrument. A simpler, automatic operational test is presented in Section III under Self Test (paragraph 3-7). The performance tests described here can also be used to perform incoming inspection of the instrument and to verify that the instrument meets specified performance after troublehsooting and/or adjustment. If the performance tests indicate that the instrument is operating outside specified limits, check that the controls on the instruments used in the test and the test set-up itself are correct, then proceed with adjustments and/or troubleshooting.

*Notes: 1. To ensure proper test results and instrument operation, Hewlett-Packard suggest a 60 minute warm-up and stabilization period before performing any of the performance tests.*

*2. Initial control settings described in paragraph 3-9 must be used for each performance test. Exceptions to these settings will be noted as they occur. After completing a performance test, return 4192A controls to the initial control settings.*

## 4-3. EQUIPMENT REQUIRED

4-4. Equipment required to perform all of the performance tests is listed in Table 4-1. Any equipment that satisfies or exceeds the critical specifications listed in the table may be used as a substitute for the recommend models. Accuracy checks described in this section use the HP Model 16344A 1MHz Pase Standard. The characteristics of the equipment satisfy the performance requirements for the accuracy checks and are especially suited for use as the 4192A's accuracy test standards.

*Note: Components used as standards should be calibrated by an instrument whose accuracy is traceable to NBS or an equivalent standards group; or calibrated directly by an authorized calibration organization such as NBS. The calibration cycle should be in accordance with stability specifications of each component.*

## 4-5. TEST RECORD

4-6. Performance test results can be recorded on the Test Record at the completion of the test. The Test Record is at the end of this section. It lists all the tested specifications and their acceptable limits. The results recorded at incoming inspection can be used for comparison in periodic maintenance, troubleshooting, and after repairs or adjustments.

## 4-7. CALIBRATION CYCLE

4-8. This instrument requires periodic verification of performance. Depending on the conditions under which the instrument is used, e.g., environmental conditions or frequency of use, the instrument should be checked with the performance tests described here, at least once a year. To keep instrument down-time to a minimum and to insure optimum operation, preventive maintenance should be performed at least twice a year.

## 4-9. MEASUREMENT SIGNAL FREQUENCY ACCURACY TEST

4-10. This test verifies that test signal frequencies are within specifications.

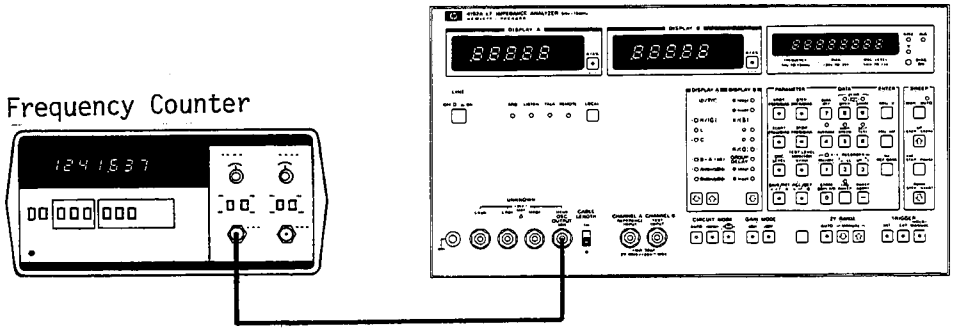


**Figure 4-1. Measurement Signal Frequency Accuracy Test Setup**

**EQUIPMENT:**

| | |
|---|---|
| Universal Counter | HP5314A |
| BNC-to-BNC Cable | PN 8120-1839 |

**PROCEDURE:**

a. Connect the input of the 5314A to the OSC OUTPUT ($H_{CUR}$) terminal of the 4192A as shown in Figure 4-1.

b. Set the 4192A's controls as follows:

| | |
|---|---|
| SPOT FREQ. | 1MHz |
| Other Controls | Initial Settings |

c. Set the 5314A's controls for 10Hz resolution. Frequency readout must be between 0.99995MHz and 1.00005 MHz.

d. Change the 4192A's SPOT FREQ. to 10MHz. Readout on the 5314A must be between 9.9995MHz and 10.005MHz.

e. Disconnect BNC-to-BNC cable from OSC OUTPUT and connect it to 1MHz OUTPUT terminal on the rear panel. Readout on the 5314A must be betweem 0.99995MHz and 1.00005MHz.

**Table 4-2. Measurement Signal Frequency Accuracy Test**

| Frequency setting | Test point | Test limits |
|---|---|---|
| 1MHz | OSC OUTPUT ($H_{CUR}$) | 0.99995 – 1.00005MHz |
| 10MHz | OSC OUTPUT ($H_{CUR}$) | 9.9995 – 10.0005MHz |
| | 1MHz OUTPUT | 0.99995 – 1.00005MHz |

## 4-11. MEASUREMENT SIGNAL LEVEL ACCURACY TEST

4-12. This test verifies that variable OSC output level is within specifications.

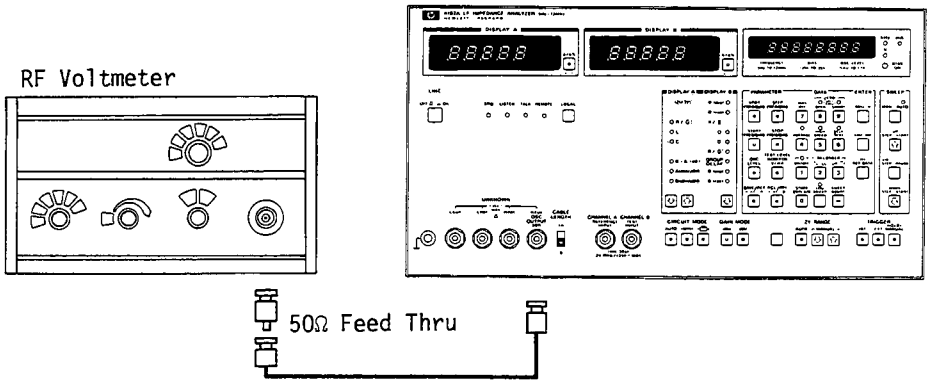


**Figure 4-2. Measurement Signal Level Accuracy Test Setup.**

**EQUIPMENT:**

| | |
|---|---|
| RF Voltmeter | HP3403C W/OPT 001 |
| BNC-to-BNC Cable | PN 8120-1838 |
| 50Ω Feedthrough Termination | PN 04192-61002 |

Note: Warm up the voltmeter at least 1 hour.

**PROCEDURE:**

a. Connect the $H_{CUR}$ terminal of the 4192A to the input of the 3403C through the 50Ω termiation as shown in Figure 4-2.

b. Set the 4192A's controls as follows:

| | |
|---|---|
| DISPLAY A | B–A (dB) |
| SPOT FREQ. | 100Hz |
| OSC LEVEL | 5mV |
| Other Controls | Initial Settings |

c. Set the 3403C's controls as follows:

| | |
|---|---|
| FUNCTION | ACV |
| RANGE | AUTO |
| RESPONSE TIME | SLOW (for 5Hz only) |

d. Readout on the 3403C must be between 2.75mV and 7.26mV.

e. Set the 4192A's SPOT FREQ. to the test frequencies listed in Table 4-3 (a). Readout on the 3403C at each frequency must be within the limits given in the table.

f. Set the 4192A's OSC LEVEL and SPOT FREQ. in accordance with Table 4-3 (b), (c), and (d). Readout on the 3403C at each frequency must be within the limits given in the table.

**Table 4-3. Measurement Signal Level Accuracy Test**

(a)

| OSC LEVEL setting : 5mV | |
|---|---|
| Test frequency | Test limits |
| 100Hz | 2.75 – 7.26mV |
| 1kHz | 2.75 – 7.26mV |
| 10kHz | 2.75 – 7.25mV |
| 100kHz | 2.75 – 7.25mV |
| 1MHz | 2.73 – 7.27mV |

(b)

| OSC LEVEL setting : 100mV | |
|---|---|
| Test frequency | Test limits |
| 5Hz | 91.0 – 109.0mV |
| 100Hz | 92.9 – 107.1mV |
| 1kHz | 93.0 – 107.0mV |
| 10kHz | 93.0 – 107.0mV |
| 100kHz | 93.0 – 107.0mV |
| 1MHz | 93.0 – 107.0mV |
| 13MHz | 74.5 – 125.5mV |

(c)

| OSC LEVEL setting : 105mV | |
|---|---|
| Test frequency | Test limits |
| 5Hz | 87.7 – 122.35mV |
| 100Hz | 89.7 – 120.3mV |
| 1kHz | 89.8 – 120.2mV |
| 10kHz | 89.8 – 120.2mV |
| 100kHz | 89.8 – 120.2mV |
| 1MHz | 89.8 – 120.2mV |
| 13MHz | 70.4 – 139.6mV |

(d)

| OSC LEVEL setting : 1.1V | |
|---|---|
| Test frequency | Test limits |
| 5Hz | 1.013 – 1.187V |
| 100Hz | 1.034 – 1.166V |
| 1kHz | 1.035 – 1.165V |
| 10kHz | 1.035 – 1.165V |
| 100kHz | 1.035 – 1.165V |
| 1MHz | 1.035 – 1.165V |
| 13MHz | 0.832 – 1.368V |

## 4-13. CAPACITANCE ACCURACY TEST

4-14. This test checks the accuracy of full scale capacitance measurements over the full frequency range (constant test signal level). The capacitance accuracy checks are made by connecting a standard capacitor to the instrument and comparing the measurement readouts with the calibrated value of the standard to verify that the instrument meets specifications. Accuracies for dissipation factors of nearly zero are also checked in this test.

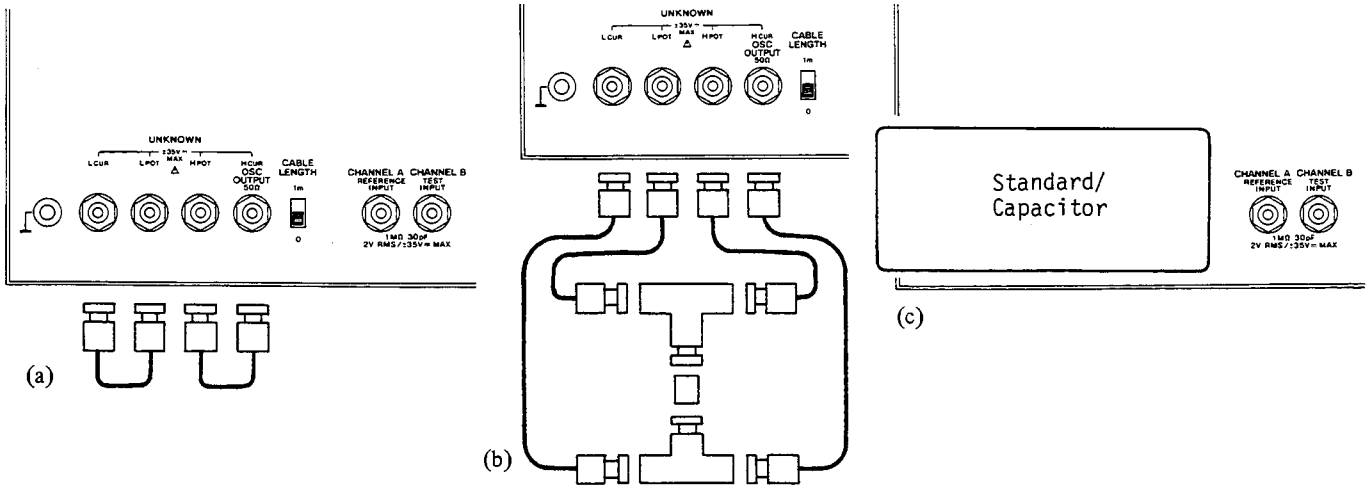


**Figure 4-3. Capacitance Accuracy Test Setups**

## PERFORMANCE TESTS

### EQUIPMENT:

| | | |
|---|---|---|
| Standard Capacitors | 1pF | HP16381A |
| | 10pF | HP16382A |
| | 100pF | HP16383A |
| | 1000pF | HP16384A |
| Terminations | OPEN | HP16074A |
| | SHORT | Standard Resistor Set |

### PROCEDURE:

a. Set the 4192A's controls as follows:

| | |
|---|---|
| DISPLAY A | C |
| DISPLAY B | D |
| OSC LEVEL | 300mV |
| SPOT FREQ. | 1MHz |
| AVERAGE | ON |
| Other Controls | Initial Settings |

*Note: If the OPEN and SHORT terminations are not available, use the test setups shown in Figure 4-3 (a) and (b) for steps b and d, respectively. Equipment required for these alternate test setups is as follows:*

| | |
|---|---|
| BNC-to-BNC Cable | 10cm long, 4 ea. |
| BNC Tee Adapter | HP P/N 1250-0781, 2 ea. |
| BNC (f)-to-BNC(f) Adapter | HP P/N 1250-0080 |

*The BNC-to-BNC cables must be no longer than 10cm. Using longer cables will affect the test results.*

b. Connect the OPEN termination directly to the UNKNOWN terminals as shown in Figure 4-3 (c).

c. Press [Blue] and [OPEN 8] to perform ZERO (OPEN) calibration (CAL will be displayed on DISPLAY A for a few seconds and the OPEN indicator lamp will come on).

d. Connect the SHORT termination directly to the UNKNOWN terminals as shown in Figure 4-3 (c).

e. Press [Blue] and [SHORT 9] to perform ZERO (SHORT) calibration (CAL will be displayed on DISPLAY A for a few seconds and the SHORT indicator lamp will come on).

f. Connect the 1pF Standard Capacitor directly to the UNKNOWN terminals as shown in Figure 4-3 (c).

g. Set the 4192A's SPOT FREQ. in accordance with Table 4-4 (a). Capacitance and dissipation factor readouts should be within the test limits given in the table.

h. Using the 10pF, 100pF, and 1000pF standard capacitors, repeat step g for Table 4-4 (b) thru (d).

**Table 4-4. Capacitance Accuracy Test**

(a)

| Standard capacitor : 1pF | | |
|---|---|---|
| Test frequency | C test limits | D test limits |
| 100kHz | C.V. ± 6 fF | 0 ± 0.0191 |
| 500kHz | C.V. ± 3 fF | 0 ± 0.0055 |
| 1MHz | C.V. ± 2.6 fF | 0 ± 0.0038 |
| 5MHz | C.V. ± 13 fF | 0 ± 0.0113 |
| 10MHz | C.V. ± 21.6 fF | 0 ± 0.0216 |
| 13MHz | C.V. ± 28.0 fF | 0 ± 0.0279 |

(b)

| Standard capacitor : 10pF | | |
|---|---|---|
| Test frequency | C test limits | D test limits |
| 10kHz | C.V. ± 0.06pF | 0 ± 0.0191 |
| 50kHz | C.V. ± 0.03pF | 0 ± 0.0055 |
| 100kHz | C.V. ± 26fF | 0 ± 0.0038 |
| 500kHz | C.V. ± 40fF | 0 ± 0.0016 |
| 1MHz | C.V. ± 13fF | 0 ± 0.0012 |
| 5MHz | C.V. ± 110fF | 0 ± 0.0092 |
| 10MHz | C.V. ± 163fF | 0 ± 0.0174 |
| 13MHz | C.V. ± 211fF | 0 ± 0.0224 |

(c)

| Standard capacitor : 100pF | | |
|---|---|---|
| Test frequency | C test limist | D test limits |
| 1kHz | C.V. ± 0.6 pF | 0 ± 0.0191 |
| 5kHz | C.V. ± 0.3 pF | 0 ± 0.0055 |
| 10kHz | C.V. ± 0.26 pF | 0 ± 0.0038 |
| 50kHz | C.V. ± 0.4pF | 0 ± 0.0016 |
| 100kHz | C.V. ± 0.13 pF | 0 ± 0.0012 |
| 500kHz | C.V. ± 0.4pF | 0 ± 0.0016 |
| 1MHz | C.V. ± 0.13 pF | 0 ± 0.0012 |
| 5MHz | C.V. ± 1.1 pF | 0 ± 0.0107 |
| 10MHz | C.V. ± 2.91 pF | 0 ± 0.0354 |
| 13MHz | C.V. ± 4.74 pF | 0 ± 0.0580 |

(d)

| Standard capacitor : 1000pF | | |
|---|---|---|
| Test frequency | C test limits | D test limits |
| 100Hz | C.V. ± 13 pF | 0 ± 0.025 |
| 400Hz | C.V. ± 3 pF | 0 ± 0.006 |
| 1kHz | C.V. ± 2.6 pF | 0 ± 0.0038 |
| 5kHz | C.V. ± 4 pF | 0 ± 0.0016 |
| 10kHz | C.V. ± 1.3 pF | 0 ± 0.0012 |
| 50kHz | C.V. ± 4 pF | 0 ± 0.0016 |
| 100kHz | C.V. ± 1.3 pF | 0 ± 0.0012 |
| 500kHz | C.V. ± 4 pF | 0 ± 0.0016 |
| 1MHz | C.V. ± 1.3 pF | 0 ± 0.0012 |

C.V. = Calibrated Value

## 4-15. RESISTANCE ACCURACY TEST

4-16. This test checks the accuracy of full scale resistance measurements over the full frequency range (constant test signal level). The resistance accuracy checks are made by connecting a standard resistor to the instrument and comparing measurement readouts with the calibrated value of the standard to verify that the instrument meets specifications.

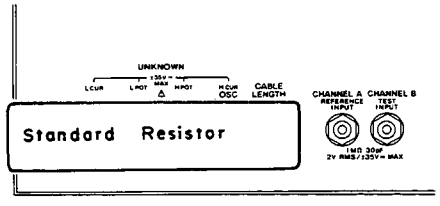


**Figure 4-4. Resistance Accuracy Test Setup**

## EQUIPMENT:

Standard Resistors ..... 100Ω, 1kΩ, 10kΩ, 100kΩ } HP16074A Standard Resistor Set

## PROCEDURE:

*Note: If the Capacitance Accuracy Test (paragraph 4-13) has not been performed, perform the ZERO (SHORT) offset adjustment described in steps a, d, and e of paragraph 4-13 before proceeding with this test.*

a. Set the 4192A's controls as follows:

DISPLAY A ..... R/G
OSC LEVEL ..... 300mV
CIRCUIT MODE ..... (series mode)
AVERAGE ..... ON
Other Controls ..... Initial Settings

b. Connect the 100Ω standard resistor directly to the UNKNOWN terminals as shown in Figure 4-4.

c. Set the 4192A's SPOT FREQ. in accordance with Table 4-5. Resistance readouts should be within the test limits given in the table.

d. Repeat step c for the 1kΩ, 10kΩ, and 100kΩ standard resistors.

**Table 4-5. Resistance Accuracy Test**

| Test frequency | Test limits | | | |
|---|---|---|---|---|
| | 100Ω | 1kΩ | 10kΩ | 100kΩ |
| 5Hz | C.V. ±1.29Ω | C.V. ±22.6Ω | C.V. ±0.206kΩ | C.V. ±2.43kΩ |
| 10Hz | C.V. ±0.71Ω | C.V. ±12.9Ω | C.V. ±0.119kΩ | C.V. ±1.38kΩ |
| 50Hz | C.V. ±0.25Ω | C.V. ±5.23Ω | C.V. ±0.050kΩ | C.V. ±0.54kΩ |
| 100Hz | C.V. ±0.13Ω | C.V. ±4.2Ω | C.V. ±0.041kΩ | C.V. ±0.43kΩ |
| 500Hz | C.V. ±0.15Ω | C.V. ±3.5Ω | C.V. ±0.033kΩ | C.V. ±0.33kΩ |
| 1kHz | C.V. ±0.13Ω | C.V. ±3.3Ω | C.V. ±0.033kΩ | C.V. ±0.33kΩ |
| 5kHz | C.V. ±0.13Ω | C.V. ±3.3Ω | C.V. ±0.033kΩ | C.V. ±0.33kΩ |
| 10kHz | C.V. ±0.13Ω | C.V. ±3.3Ω | C.V. ±0.033kΩ | C.V. ±0.33kΩ |
| 50kHz | C.V. ±0.13Ω | C.V. ±3.3Ω | C.V. ±0.033kΩ | C.V. ±0.33kΩ |
| 100kHz | C.V. ±0.13Ω | C.V. ±3.3Ω | C.V. ±0.033kΩ | C.V. ±0.33kΩ |
| 500kHz | C.V. ±0.13Ω | C.V. ±3.3Ω | C.V. ±0.033kΩ | ——— |
| 1MHz | C.V. ±0.13Ω | C.V. ±3.3Ω | C.V. ±0.033kΩ | ——— |
| 5MHz | C.V. ±0.41Ω | C.V. ±10.7Ω | ——— | ——— |
| 10MHz | C.V. ±2.91Ω | C.V. ±31.0Ω | ——— | ——— |
| 13MHz | C.V. ±4.74Ω | C.V. ±49.3Ω | ——— | ——— |

C.V. = Calibrated Value

## 4-17. FREQUENCY/PHASE ACCURACY TEST

4-18. This test verifies that vector measurements are made with optimum phase detection accuracy over the full frequency range.

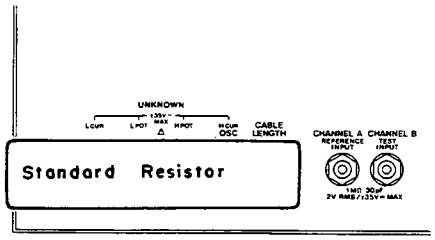


**Figure 4-5. Frequency/Phase Accuracy Test Setup**

**EQUIPMENT:**

Resistor ..... 0Ω } HP16074A
..... 10Ω } Standard Resistor Set

**PROCEDURE:**

a. Set the 4192A's controls as follows:

DISPLAY A ..... R/G
SPOT FREQ. ..... 1MHz
OSC LEVEL ..... 300mV
CIRCUIT MODE ..... (series mode)
AVERAGE ..... ON
Other Controls ..... Initial Settings

b. Connect the 0Ω standard resistor directly to the 4192A's UNKNOWN terminals as shown in Figure 4-5.

c. Press [Blue] and [SHORT 9] keys to perform the ZERO (SHORT) offset adjustment.

Note: If the Capacitance Accuracy Test or the Resistance Accuracy Test have been performed (The SHORT indicator lamp is lit), perform step c twice to invalidate the previous ZERO offset data.

d. Connect the 10Ω standard resistor directly to the UNKNOWN terminals as shown in Figure 4-5.

e. Set the 4192A's SPOT FREQ. in accordance with Table 4-6. Reactance readouts (Display B) should be within the test limits given in the table.

**Table 4-6. Frequency/Phase Accuracy Test**

| Test frequency | Reactance test limits | Test frequency | Reactance test limits |
|---|---|---|---|
| 100Hz | C.V. ± 0.033Ω | 100kHz | C.V. ± 0.027Ω |
| 400Hz | C.V. ± 0.028Ω | 500kHz | C.V. ± 0.029Ω |
| 1kHz | C.V. ± 0.026Ω | 1MHz | C.V. ± 0.032Ω |
| 5kHz | C.V. ± 0.026Ω | 5MHz | C.V. ± 0.158Ω |
| 10kHz | C.V. ± 0.026Ω | 10MHz | C.V. ± 0.462Ω |
| 50kHz | C.V. ± 0.026Ω | 13MHz | C.V. ± 0.726Ω |

C.V. = Calibrated Value

## 4-19. AMPLITUDE/PHASE ACCURACY TEST

4-20. This test checks the accuracy of amplitude and phase measurements over the full frequency range (constant test signal level). One signal is applied to both CHANNEL A and CHANNEL B; if the instrument is operating within specifications, the measured amplitude and phase should be 0dB and 0°, respectively.

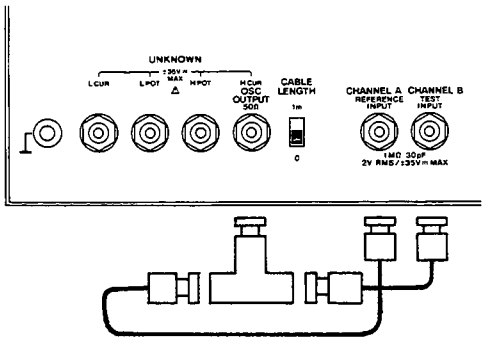


**Figure 4-6. Amplitude/Phase (0dB) Accuracy Test Setup**

**EQUIPMENT:**

| | |
|---|---|
| BNC-to-BNC Cable | PN 8120-1838,2ea.* |
| BNC Tee Adapter | hp P/N 1250-0781 |

*Both cables must be of the same length.

**PROCEDURE:**

a. Interconnect OSC OUTPUT ($H_{CUR}$), CHANNEL A and CHANNEL B as shown in Figure 4-6.

b. Set the 4192A's controls as follows:

| | |
|---|---|
| DISPLAY A | B-A (dB) |
| DISPLAY B | $\theta$ (deg) |
| SPOT FREQ. | 5Hz |
| OSC LEVEL | 500mV |
| Other Controls | Initial Settings |

c. Check the readouts on both DISPLAY A and B (Amplitude/Phase). They should be within ±0.096dB and ±0.48 deg., respectively.

d. Change the 4192A's SPOT FREQ. in accordance with Table 4-7. Amplitude and Phase readouts should be within test limits given in the table.

Table 4-7. Amplitude/Phase (0dB) Accuracy Test

| Test frequency | Amplitude test limits | Phase test limits |
|---|---|---|
| 5Hz | 0 ± 0.096dB | 0 ± 0.48 deg |
| 10Hz | 0 ± 0.056dB | 0 ± 0.28 deg |
| 50Hz | 0 ± 0.024dB | 0 ± 0.12 deg |
| 100Hz | 0 ± 0.020dB | 0 ± 0.10 deg |
| 500Hz | 0 ± 0.020dB | 0 ± 0.10 deg |
| 1kHz | 0 ± 0.020dB | 0 ± 0.10 deg |
| 5kHz | 0 ± 0.020dB | 0 ± 0.10 deg |
| 10kHz | 0 ± 0.020dB | 0 ± 0.10 deg |
| 50kHz | 0 ± 0.090dB | 0 ± 0.16 deg. |
| 100kHz | 0 ± 0.090dB | 0 ± 0.16 deg |
| 500kHz | 0 ± 0.090dB | 0 ± 0.16 deg |
| 1MHz | 0 ± 0.090dB | 0 ± 0.16 deg |
| 5MHz | 0 ± 0.250dB | 0 ± 0.80 deg |
| 10MHz | 0 ± 0.450dB | 0 ± 1.60 deg |
| 13MHz | 0 ± 0.570dB | 0 ± 2.08 deg |

## 4-21. AMPLITUDE ACCURACY TEST

4-22. This test checks amplitude measurement accuracy at three spot frequencies. An attenuated (-10dB, -30dB, -50dB, and -70dB) signal is applied to CHANNEL B, and an unattenuated reference signal is applied to CHANNEL A. The measured attenuation is then compared with the calibrated value of the attenuator.

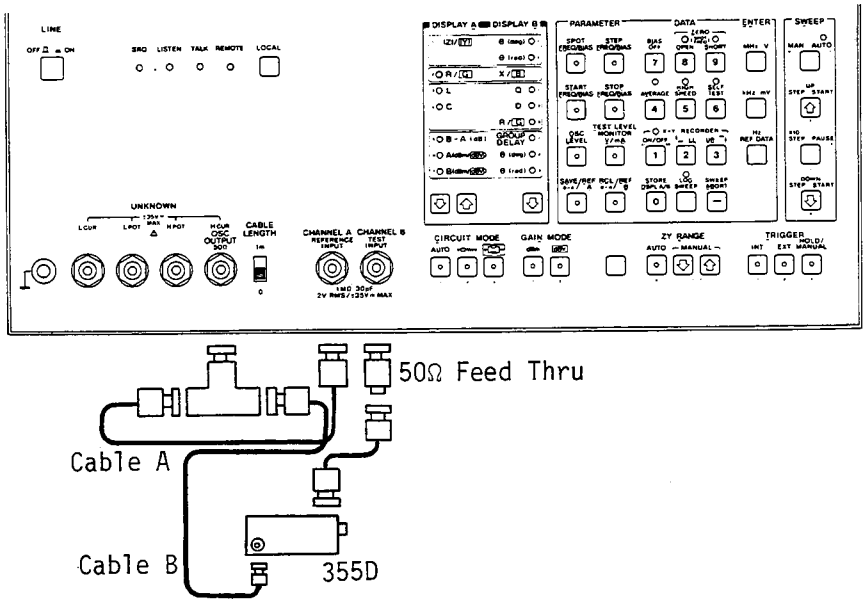


Figure 4-7. Amplitude Accuracy Test Setup.

## EQUIPMENT:

| | |
|---|---|
| Attenuator | HP355D (calibrated) |
| 50Ω Feedthrough Termination | PN 04192-61002 |
| BNC-to-BNC Cable | PN 8120-1838, 2ea. |
| BNC-to-BNC Cable | 10cm long |
| BNC Tee Adapter | hp P/N 1250-0781 |

*Notes: 1. Cables A and B should be* PN 8120-1838 *and of the same length.*

*2. The 355D must be calibrated for use at 50kHz, 1MHz and 10MHz (see page 4-B, Table 4-1). If necessary, contact the nearest Hewlett-Packard Office for calibration.*

## PROCEDURE:

a. Connect the attenuator, termination, adapter, and cables to the 4192A as shown in Figure 4-7.

b. Set the 4192A's controls as follows:

| | |
|---|---|
| DISPLAY A | B-A (dB) |
| SPOT FREQ. | 50kHz |
| OSC LEVEL | 1V |
| Other Controls | Initial Settings |

c. Set the attenuator to 0dB. The value displayed on DISPLAY A is the Insertion Loss of the attenuator.

d. Press [Blue] and STORE DSPL A/B [0] keys to store the values displayed on DISPLAY A. Press the Δ/Δ% [0] key of DISPLAY A. DISPLAY A indicates the effective value of the attenuator.

e. Change the attenuator's setting to -10dB.

f. Check the readout on DISPLAY A. It should be within the attenuator's calibrated value ±0.090dB.

g. Change the attenuator's setting to −30dB, −50dB and −70dB. Tolerances should be within the test limits given in Table 4-8.

h. Change the 4192A's SPOT FREQ. to 1MHz. Release the deviation measurement function.

i. Repeat steps d to g, and check that the readouts on DISPLAY A are in accordance with the table.

j. Change the 4192A's SPOT FREQ. to 10MHz and repeat to check.

**Table 4-8. Amplitude Accuracy Test**

| Test frequency | Test limits | | | |
|---|---|---|---|---|
| | -10dB | -30dB | -50dB | -70dB |
| 50kHz | C.V. ± 0.09 dB | C.V. ± 0.16dB | C.V. ± 0.24 dB | C.V. ± 2.04dB |
| 1MHz | C.V. ± 0.09 dB | C.V. ± 0.16dB | C.V. ± 0.24dB | C.V. ± 2.04dB |
| 10MHz | C.V. ± 0.45 dB | C.V. ± 0.88dB | C.V. ± 1.32dB | C.V. ± 11.22dB |

C.V. = Calibrated Value

## 4-23. ABSOLUTE AMPLITUDE ACCURACY TEST

4-24. This test checks absolute gain measurement accuracy over the full frequency range. A signal is applied to CHANNEL A through a 50Ω termination and to a voltmeter. The reading on the voltmeter is compared with the DISPLAY A reading to verify that the instrument has accurately measured the amplitude of the signal.

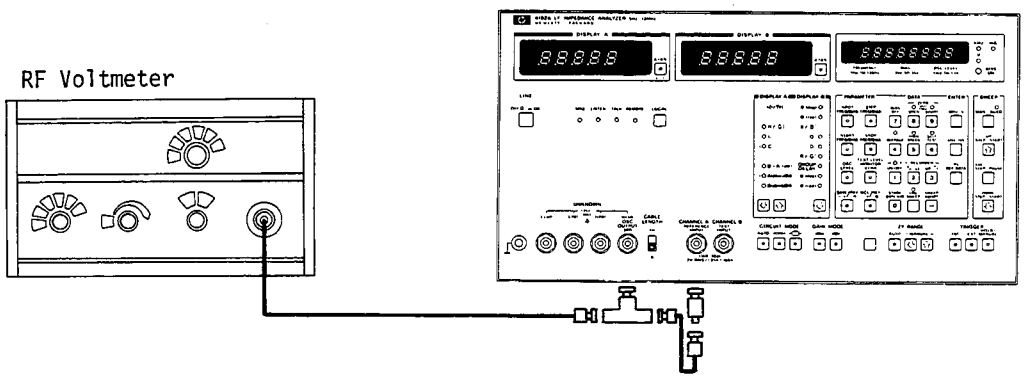


**Figure 4-8. Absolute Amplitude Accuracy Test Setup.**

### EQUIPMENT:

| | |
|---|---|
| RF Voltmeter | HP3403C W/OPT 001 |
| 50Ω Feedthrough Termination | PN 04192-61002 |
| BNC-to-BNC Cable | PN 8120-1838, 2ea. |
| BNC Tee Adapter | hp P/N 1250-0781 |

### PROCEDURE:

a. Connect the OSC OUTPUT ($H_{CUR}$) terminal to both the 3403C Input and CHANNEL A (REFERENCE INPUT) as shown in Figure 4-8.

b. Set the 4192A's controls as follows:

| | |
|---|---|
| DISPLAY A | A (dBm/dBV) |
| OSC LEVEL | 500mV |
| SPOT FREQ. | 5Hz |
| GAIN MODE | dBV |
| Other Controls | Initial Settings |

c. Set the 3403C's controls as follows:

| | |
|---|---|
| FUNCTION | AC |
| RANGE | AUTO |

d. Translate the voltage reading on the 3403C to a dBV value using the following equation:

dBV value = $20 \log_{10}$ (3403C voltage reading) ..... (eq. 4-1)

*Note: If the 3403C is equipped with option 006 (dB display), set 3403C's FUNCTION to AC dB. The readings are dBV values, and no calculation is necessary.*

e. Compare the readout on Display A with the value calculated in step d. The difference should be within the test limits given in Table 4-9.

f. Change the 4192A's SPOT FREQ. in accordance with Table 4-9 and repeat steps d and e.

**Table 4-9. Absolute Amplitude Accuracy Test**

| Test frequency | Test limits | Test frequency | Test limits |
|---|---|---|---|
| 5Hz | C.V. ± 0.60dBV | 30kHz | C.V. ± 0.40dBV |
| 10Hz | C.V. ± 0.50dBV | 75kHz | C.V. ± 0.40dBV |
| 30Hz | C.V. ± 0.43dBV | 100kHz | C.V. ± 0.40dBV |
| 100Hz | C.V. ± 0.40dBV | 300kHz | C.V. ± 0.40dBV |
| 300Hz | C.V. ± 0.40dBV | 1MHz | C.V. ± 0.40dBV |
| 1kHz | C.V. ± 0.40dBV | 3MHz | C.V. ± 0.64dBV |
| 3kHz | C.V. ± 0.40dBV | 10MHz | C.V. ± 1.20dBV |
| 10kHz | C.V. ± 0.40dBV | 13MHz | C.V. ± 1.44dBV |

C.V. = dBV value (measured or calcurated in step d).

## 4-25. PHASE ACCURACY TEST

4-26. This test checks the accuracy of phase measurements. A calibrated phase standard, which generates two sine waves of the same frequency and amplitude, is connected to the instrument's CHANNEL B (TEST INPUT) and CHANNEL A (REFERENCE INPUT). The phase of the signal applied to CHANNEL B is shifted in 22.5° steps in reference to the signal applied to CHANNEL A. The measured phase shift, displayed on DISPLAY B, is then compared with the actual phase shift.

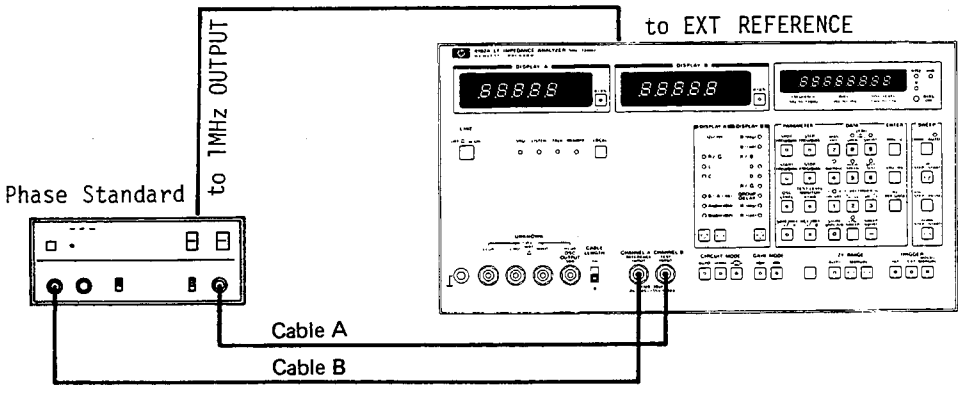


**Figure 4-9. Phase Accuracy Test Setup.**

**EQUIPMENT:**

| | |
|---|---|
| 1MHz Phase Standard | HP16344A |
| BNC-to-BNC Cable | PN 8120-1839, 2ea. |
| BNC-to-BNC Cable | 1 meter |

*Note: Cables A and B in Figure 4-9 should be the same length.*

**PROCEDURE:**

a. Connect the 16344A Phase Standard to the 4192A as shown in Figure 4-9.

b. Set the 4192A's controls as follows:

| | |
|---|---|
| DISPLAY A | B-A (dB) |
| DISPLAY B | $\theta$ (deg) |
| SPOT FREQ. | 1MHz |
| Other Controls | Initial Settings |

c. Press the RESET key on the 16344A.

d. Press [Blue], [STORE DSPL A/B 0] keys to store the value displayed on DISPLAY B. Press the [Δ/Δ% 0] key of DISPLAY B.

e. Observe DISPLAY B, the reading should be 0 degrees.

f. Press the SET key on the 16344A. (Shifts the phase 22.5°.)

g. The reading on DISPLAY B should be -22.5 ± 0.16 degrees

h. Repeatedly press the SET key and check that the measured phase is within the test limits given in Table 4-10.

*Note: When the RESET key on the 16344A is pressed, the phase difference between the two output signals returns to 0°.*

**Table 4-10. Phase Accuracy Test**

| Phase setting | Test limits | Phase setting | Test limits |
|---|---|---|---|
| ±0.0° | 0 deg | ±180.0° | ±180.0° ± 0.16 deg |
| -22.5° | −22.5° ± 0.16 deg | +157.5° | 157.5° ± 0.16 deg |
| -45.0° | −45.0° ± 0.16 deg | +135.0° | 135.0° ± 0.16 deg |
| -67.5° | −67.5° ± 0.16 deg | +112.5° | 112.5° ± 0.16 deg |
| -90.0° | −90.0° ± 0.16 deg | +90.0° | 90.0° ± 0.16 deg |
| -112.5° | −112.5° ± 0.16 deg | +67.5° | 67.5° ± 0.16 deg |
| -135.0° | −135.0° ± 0.16 deg | +45.0° | 45.0° ± 0.16 deg |
| -157.5° | −157.5° ± 0.16 deg | +22.5° | 22.5° ± 0.16 deg |

## 4-27. DC BIAS VOLTAGE ACCURACY TEST

4-28. This test checks the accuracy of the DC bias voltage output by the instrument.

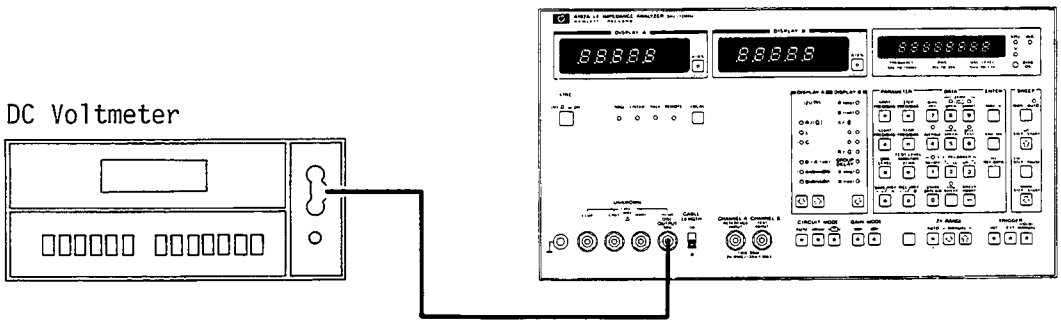


**Figure 4-10. DC Bias Voltage Accuracy Test Setup**

**EQUIPMENT:**

DC Voltmeter ..... HP3465A
BNC-to-Dual Banana Plug Cable ..... HP11001A

**PRODUCRE:**

a. Connect the 3465A to the 4192A as shown in Figure 4-10. Set the 4192A's controls to Initial Settings.

b. Set the 4192A's SPOT BIAS to 0V (press [Blue], [SPOT FREQ/BIAS 0], [0], [MHz V]). Other controls should be set to their Initial Settings.

c. Set the 3465A for DCV measurements. Voltage readout should be 0V ± 5mV.

d. Change the 4192A's SPOT BIAS in accordance with Table 4-11. Check that the measured voltages are within the test limits given in the Table.

e. Press [Blue], [BIAS OFF 7] (BIAS on Indicator will go off).

**Table 4-11. DC Bias Voltage Accuracy Test**

| Bias voltage setting | Test limits |
|---|---|
| 0V | 0V ± 5mV |
| 10mV | 10mV ± 5mV |
| 100mV | 100mV ± 5mV |
| 1V | 1V ± 10mV |
| 10V | 10V ± 55mV |
| 35V | 35V ± 180mV |
| -10mV | -10mV ± 5mV |
| -100mV | -100mV ± 5mV |
| -1V | 1V ± 10mV |
| -10V | -10V ± 55mV |
| -35V | -35V± 180mV |

## 4-29. RECORDER OUTPUT VOLTAGE ACCURACY TEST

4-30. This test verifies that recorder output voltage for the 4192A meets specifications.

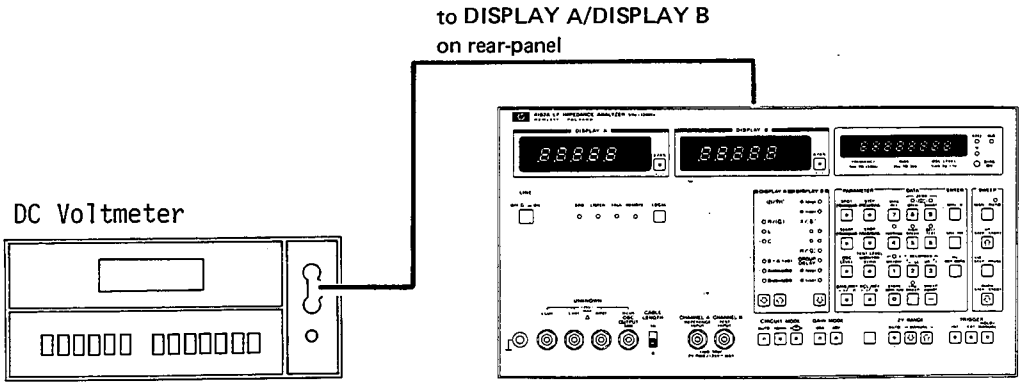


**Figure 4-11. Recorder Output Voltage Accuracy Test Setup.**

### EQUIPMENT:

DC Voltmeter ..... HP3465A
BNC-to-Dual Banana Plug Cable ..... HP11001A

### PROCEDURE:

a. Connect the INPUT of the 3465A to the DISPLAY A terminal on the rear panel of the 4192A as shown in Figure 4-11.

b. Press [Blue] and [2] (↓← LL). The readout on the 3465A should be 0V ± 20mV.

c. Press [Blue] and [3] (UR →↑). The readout on the 3465A should be 1V ± 5mV higher than the voltage measured in step b.

d. Press [Blue], [6] (SELF TEST), and quickly [7] (SELF TEST 7). The readout on the 3265A should be 1V ± 5mV less than the voltage measured in step b.

e. Connect the INPUT of the 3465A to the DISPLAY B terminal.

f. Press [Blue] and [6] (SELF TEST) to release the SELF TEST function.

g. Repeat steps b, c, and d.

h. Press [Blue] and [6] (SELF TEST) to release the SELF TEST function.

**Table 4-12. Recorder Output Voltage Accuracy Test**

| Panel setting (Output Voltage) | Test limits |
|---|---|
| ↓← LL (0V) | 0V ± 20mV |
| UR →↑ (+1V) | 1 + (readout in step b.) ± 5mV |
| SELF TEST 7 (-1V) | -1 + (readout in step b.) ± 5mV |

## 4-31. HP-IB INTERFACE TEST

4-32. This test verifies the instrument's HP-IB capabilities (listed in Table 3-22).

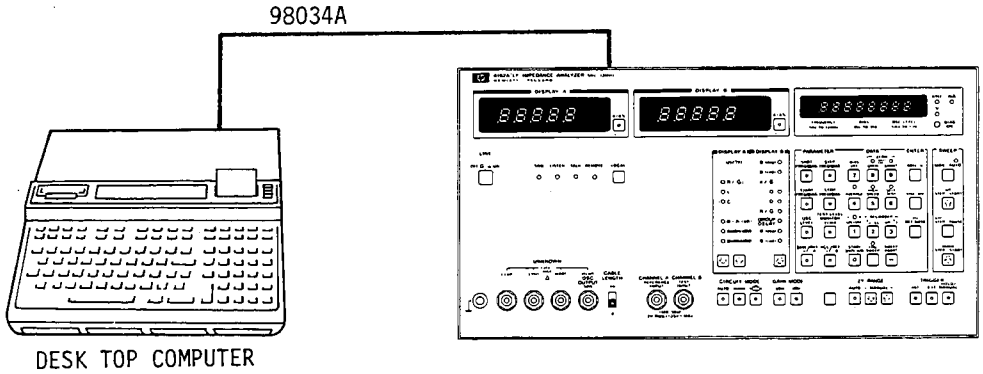


**Figure 4-12. HP-IB Interface Test Setup.**

**EQUIPMENT:**

| | |
|---|---|
| Calculator | HP9825A |
| I/O ROM's | HP98210A, 98213A |
| Interface Cable | HP98034A |
| Sample Capacitor | 1000pF ~ 1000nF |
| Test Fixture | HP16047A |

**PROCEDURE:**

a. Turn both the 4192A and the 9825A off.

b. Connect the 98034A between the 9825A and 4192A as shown in Figure 4-12, and install the I/O ROM's in the ROM slots.

c. Connect the 16047A Test Fixture to the UNKNOWN terminals.

d. Set the 4192A's HP-IB control switch, located on the rear panel, as follows:
   bits 1 ~ 5 : 10001 ($17_{10}$)
   bit 6 : 0
   bit 7 : 0

e. Turn the 4192A and the 9825A on.

f. Load one of the five test programs into the calculator.

g. Execute the program and follow the prompts and instructions that are output by the 9825A. Details on the controller's (calculator) instructions and the appropriate operator response are given in Tables 4-13 through 4-17.

## TEST PROGRAM 1

### [PURPOSE]

This test verifies that the 4192A has the following HP-IB capabilities:

(1) Remote/Local Capability

(2) Local Lockout

(3) Talk Disable

(4) Listen Disable

### [PROGRAM LISTING]

```
0: "REMOTE/LOCAL TEST":
1: dim A$[1]
2: 0}N
3: rds(717)}S
4: prt "REMOTE/LOCAL TEST";spc 3
5: rem 7
6: wrt 717,"T1";ent "LISTEN=1, TALK=0, REMOTE=1",A$
7: if A$="n";1}N
8: cli 7;ent "LISTEN=0, TALK=0, REMOTE=1",A$
9: if A$="n";1}N
10: lcl 7;ent "LISTEN=0, TALK=0, REMOTE=0",A$
11: if A$="n";1}N
12: rem 717;ent "LISTEN=1, TALK=0, REMOTE=1",A$
13: if A$="n";1}N
14: llo 7
15: lcl 717;ent "LISTEN=1, TALK=0, REMOTE=0",A$
16: if A$="n";1}N
17: rem 7;wrt 717,"T1";ent "LISTEN=1, TALK=0, REMOTE=1",A$
18: if A$="n";1}N
19: if N=1;prt "REMOTE/LOCAL TEST FAIL";spc 3;jmp 2
20: prt "REMOTE/LOCAL TEST PASS";spc 3
21: 0}N
22: prt "LISTEN/TALK TEST";spc 3
23: red 717,A.B;ent "LISTEN=0, TALK=1, REMOTE=1",A$
24: if A$="n";1}N
25: wrt 717,"T1";ent "LISTEN=1, TALK=0, REMOTE=1",A$
26: if A$="n";1}N
27: if N=1;prt "LISTEN/TALK TEST FAIL";spc 3;jmp 2
28: prt "LISTEN/TALK TEST PASS";spc 3
29: prt "END";spc 3
30: cli 7
31: lcl 7
32: end
*5544
```

**Table 4-13. Controller Instructions and Operator Responses for Test Program 1**

| Controller Instructions | | Operator Response |
|---|---|---|
| Displays | Printout | |
| | REMOTE/LOCAL TEST | |
| LISTEN = 1*, TALK = 0, REMOTE = 1 | | If the 4192A HP-IB Status Indicators and Controller Display are the same, press [Y] , and [CONTINUE] . If not, press [N] and [CONTINUE] . |
| LISTEN = 0, TALK = 0, REMOTE = 1 | | |
| LISTEN = 0, TALK = 0, REMOTE = 0 | | |
| LISTEN = 1, TALK = 0, REMOTE = 1 | | |
| LESTEN = 1, TALD = 0,REMOTE = 0 | | |
| LISTEN = 1, TALK = 0, REMOTE = 1 | | |
| | REMOTE/LOCAL TEST PASS | If all steps are correct, this message is output. |
| | REMOTE/TALK TEST FAIL | If any step fails, this message is output. |
| | LISTEN/TALK TEST | |
| LISTEN = 0, TALK = 1, REMOTE = 1 | | If the 4192A HP-IB Status Indicators and Controller Display are the same, press [Y] , and [CONTINUE] . If not, press [N] and [CONTINUE] . |
| LISTEN = 0, TALK = 0, REMOTE = 1 | | |
| | LISTEN/TALK TEST PASS | If both steps are correct, this messsage is output. |
| | LISTEN/TALK TEST FAIL | If any step fails, this message is output. |
| | END | |

*1 indicates ON; 0 indicates OFF.

## TEST PROGRAM 2

### [PURPOSE]

This test verifies that the 4192A has the following HP-IB capabilities:

(1) Listener

(2) Device Clear

### [PROGRAM LISTING]

```
0: "LISTENER TEST-1":
1: dim P$[10]
2: prt "LISTENER TEST-1";spc 3
3: rem 7
4: cli 7
5: clr 717
6: enp "Display A ? (1 thru 7)",P$;spc 1
7: if P$="e";jmp 2
8: wrt 717,"A",P$;jmp -2
9: wrt 717,"A1"
10: enp "Display B ? (1 thru 2)",P$;spc 1
11: if P$="e";jmp 2
12: wrt 717,"B",P$;jmp -2
13: wrt 717,"A3"
14: enp "Display B ? (1 thru 3)",P$;spc 1
15: if P$="e";jmp 2
16: wrt 717,"B",P$;jmp -2
17: wrt 717,"A5"
18: enp "Display B ? (1 thru 3)",P$;spc 1
19: if P$="e";jmp 2
20: wrt 717,"B",P$;jmp -2
21: clr 717
22: enp "Circuit Mode ? (1 thru 3)",P$;spc 1
23: if P$="e";jmp 2
24: wrt 717,"C",P$;jmp -2
25: enp "Gain Mode ? (1 thru 2)",P$;spc 1
26: if P$="e";jmp 2
27: wrt 717,"A5H",P$;jmp -2
28: enp "ZY Range ? (1 thru 8)",P$;spc 1
29: if P$="e";jmp 2
30: wrt 717,"A1C2R",P$;jmp -2
31: enp "Trigger Mode ? (1 thru 3)",P$;spc 1
32: if P$="e";jmp 2
33: wrt 717,"T",P$;jmp -2
34: prt "END";spc 3
35: clr 717
36: cli 7
37: lcl 7
38: end
*20186
```

Input the numeric portion* (suffix) of the HP-IB program code (listed in Table 3-23) for each panel function of the indicated display (A or B) or mode keys (CIRCUIT MODE, GAIN MODE, ZY RANGE, TRIGGER MODE). Press [CONTINUE] and verify that the 4192A is set to the appropriate function or mode. For example, when Display A ? (1 thru 7) is displayed on the 9825A, inputting [1] and [CONTINUE] will set the 4192A to impedance measurement, and the |Z|/|Y| indicator lamp on the front-panel will come one; inputting [2] and [CONTINUE] will set the 4192A to resistance measurement, and the R/G indicator lamp will come on.

Press [E] (end) and [CONTINUE] after each step, e.g., after all seven functions of DISPLAY A have been checked.

*This number is printed on the front-panel, next to the indicator lamp or key.

## TEST PROGRAM 3

### [PURPOSE]

This test verifies that the 4192A has the following HP-IB capabilities:

(1) Listener

(2) Device Clear

### [PROGRAM LISTING]

```
0: "LISTENER TEST-2":
1: dim P$[10]
2: prt "LISTENER TEST-2";spc 3
3: rem 7
4: cli 7
5: clr 717
6: fxd 6
7: enp "Spot Freq.(KHZ) ?",P$;spc 1
8: if P$="e";jmp 2
9: wrt 717,"FR",P$,"EN";jmp -2
10: enp "Step Freq.(KHZ) ?",P$;spc 1
11: if P$="e";jmp 2
12: wrt 717,"SF",P$,"EN";jmp -2
13: enp "Start Freq.(KHZ) ?",P$;spc 1
14: if P$="e";jmp 2
15: wrt 717,"TF",P$,"EN";jmp -2
16: enp "Stop Freq.(KHZ) ?",P$;spc 1
17: if P$="e";jmp 2
18: wrt 717,"PF",P$,"EN";jmp -2
19: enp "Spot Bias(V) ?",P$;spc 1
20: if P$="e";jmp 2
21: wrt 717,"BI",P$,"EN";jmp -2
22: enp "Step Bias(V)",P$;spc 1
23: if P$="e";jmp 2
24: wrt 717,"SB",P$,"EN";jmp -2
25: enp "Start Bias(V) ?",P$;spc 1
26: if P$="e";jmp 2
27: wrt 717,"TB",P$,"EN";jmp -2
28: enp "Stop Bias(V) ?",P$;spc 1
29: if P$="e";jmp 2
30: wrt 717,"PB",P$,"EN";jmp -2
31: wrt 717,"IO"
32: enp "OSC Level(V) ?",P$;spc 1
33: if P$="e";jmp 2
34: wrt 717,"OL",P$,"EN";jmp -2
35: prt "END";spc 3
36: clr 717
37: cli 7
38: lcl 7
39: end
*348
```

Input a value for the indicated test parameter, and press [CONTINUE]. The indicator lamp for the test parameter should come on and the value that was input should be correctly displayed on the test parameter display (DISPLAY C). Press [E] and [CONTINUE] after each step.

## TEST PROGRAM 4

### [PURPOSE]

This test verifies that the 4192A has the following HP-IB capabilities:

(1) Talker

(2) Device Trigger

### [PROGRAMMING]

```
0: "TALKER TEST":
1: prt "TALKER TEST";spc 3
2: dsp "Insert sample cap. into 16047A";stp
3: prt "DATA OUTPUT TEST"
4: dim A$[1],D$[50]
5: rds(717)}S
6: rem 7
7: cli 7
8: clr 717
9: wrt 717,"A4T3"
10: trg 717
11: red 717,A,B
12: flt 4
13: prt A,B;spc 2
14: ent "Is output data correct?(y or n)",A$
15: if A$="n";prt "DATA OUTPUT TEST FAIL";spc 3;jmp 2
16: prt "DATA OUTPUT TEST PASS";spc 3
17: prt "COMPLETE DATA OUTPUT TEST-1"
18: trg 717
19: red 717,D$
20: prt D$;spc 2
21: ent "Is output data correct?(y or n)",A$
22: if A$="n";prt "COMPLETE DATA OUTPUT TEST-1 FAIL";spc 3;jmp 2
23: prt "COMPLETE DATA OUTPUT TEST-1 PASS";spc 3
24: prt "COMPLETE DATA OUTPUT TEST-2"
25: wrt 717,"F1FRR"
26: trg 717
27: red 717,D$
28: prt D$;spc 2
29: ent "Is output data correct?(y or n)",A$
30: if A$="n";prt "COMPLETE DATA OUTPUT TEST-2 FAIL";spc 3;jmp 2
31: prt "COMPLETE DATA OUTPUT TEST-2 PASS";spc 3
32: prt "COMPLETE DATA OUTPUT TEST-3"
33: wrt 717,"OLR"
34: trg 717
35: red 717,D$
36: wrt 717,"F0"
37: prt D$;spc 2
38: ent "Is output data correct?(y or n)",A$
39: if A$="n";prt "COMPLETE DATA OUTPUT TEST-3 FAIL";spc 3;jmp 2
40: prt "COMPLETE DATA OUTPUT TEST-3 PASS";spc 3
41: prt "END";spc 3
42: clr 717
43: cli 7
44: lcl 7
45: end
*19288
```

**Table 4-14. Controller Instructions and Operator Responses for Test Program 4**

| Controller Instructions | | Operator Response |
|---|---|---|
| Displays | Printout | |
| | TALKER TEST | |
| Connect a capacitor to 16047A | | Connect a capacitor (1000pF ~ 1000 nF) to 16047A Test Fixture. Then press CONTINUE. |
| | DATA OUTPUT TEST | |
| | 1.0244e - 09<br>1.0000e - 04 | DISPLAY A and DISPLAY B measurement data is output to the 9825A's thermal printer. |
| Is outpout data correct? (y or n) | | If the output data is the same as the values displayed on DISPLAYs A and B, press Y and CONTINUE. If not, press N and CONTINUE. |
| | DATA OUTPUT TEST PASS | |
| | DATA OUTPUT TEST FAIL | |
| | COMPLETE DATA OUTPUT TEST–1 | |
| | NCPN + 1.0244E - 09,<br>NDFN + 0.0001E + 00 | Complete data of DISPLAY A and DISPLAY B is output. |
| Is output data correct? (y or n) | | If the output data is correct, press Y and CONTINUE. If not, press N and CONTINUE. (See paragraph 3-125.) |
| | COMPLETE DATA OUTPUT TEST – 1 PASS | |
| | COMPLETE DATA OUTPUT TEST – 1 FAIL | |
| | COMPLETE DATA OUTPUT TEST – 2 | |
| | NCPN + 1.0245E - 09,<br>NDFN + 0.0001E + 00,<br>K + 0100.0000 | Complete data of DISPLAY A, DISPLAY B, and SPOT FREQ. is output. |
| Is output data correct? (y or n) | | If the output data is the same as the values displayed on DISPLAY's A and B and DISPLAY C (Test Parameter data display), press Y and CONTINUE. If not, press N and CONTINUE. (See paragraph 3-125.) |
| | COMPLETE DATA OUTPUT TEST – 2 PASS | |
| | COMPLETE DATA OUTPUT TEST – 2 FAIL | |

| Controller Instructions | | Operator Response |
|---|---|---|
| Displays | Printout | |
| | COMPLETE DATA OUTPUT TEST – 3 | |
| | NCPN + 1.0245E - 09, NDFN + 0.0000E + 00, V + 00001.000 | Complete data of DISPLAY A, DISPAY B, and OSC LEVEL is output. |
| Is output data correct? (y or n) | | If the output data is the same as the values displayed on DISPLAY's A and B and DISPLAY C (Test Parameter data display), press [Y] and [CONTINUE]. If not, press [N] and [CONTINUE]. (See paragraph 3-125.) |
| | COMPLETE DATA OUTPUT TEST – 3 PASS | |
| | COMPLETE DATA OUTPUT TEST – 3 FAIL | |
| | END | |

## TEST PROGRAM 5

### [PURPOSE]

This test program verifies that the 4192A has the following HP-IB capabilities:

(1) Service Request

(2) Serial Poll

### [PROGRAM LISTING]

```
0: "SRQ TEST":
1: prt "SRQ TEST";spc 3
2: fxd 0
3: oni 7,"SRQ"
4: rem 7
5: cli 7
6: clr 717
7: 0}S;prt "DATA READY";wrt 717,"D1T2";trg 717;gsb "LOOP"
8: 0}S;prt "SYNTAX ERROR";wrt 717,"D0A8";gsb "LOOP"
9: 0}S;prt "PROG. ERROR";wrt 717,"FR14000EN";gsb "LOOP"
10: 0}S;prt "TRG. TOO FAST";trg 717;wait 50;trg 717;gsb "LOOP"
11: 0}S;prt "BUSY"
12: wrt 717,"T1W1W4";wait 1000
13: rds(717)}S;prt S;spc 3
14: wrt 717,"AB"
15: prt "END";spc 3
16: cli 7
17: lcl 7
18: end
```

```
19: "LOOP":eir 7,128
20: if bit(0,S)=1;prt S;spc 3;ret
21: if bit(1,S)=1;prt S;spc 3;ret
22: if bit(2,S)=1;prt S;spc 3;ret
23: if bit(3,S)=1;prt S;spc 3;ret
24: gto "LOOP"
25: "SRQ":rds(717)}S
26: if bit(6,S)=1;jmp 2
27: prt "OTHER DEVICE SRQ";spc 3
28: "IRET":eir 7,128
29: iret
*31908
```

**Table 4-15. Controller Instruction and Operator Responses for Test Program 5**

| Controller Instructions | | Operator Response |
|---|---|---|
| Displays | Printout | |
| | SRQ TEST | |
| | DATA READY | SRQ Status Byte data should be 65 (= 01000001). |
| | 65 | |
| | SYNTAX ERROR | SRQ Status Byte data should be 66 (= 01000010). |
| | 66 | |
| | PROG. ERROR | SRQ Status Byte data should be 68 (= 01000100). |
| | 68 | |
| | TRG. TOO FAST | SRQ Status Byte data should be 72 (= 01001000). |
| | 72 | |
| | BUSY | SRQ Status Byte data should be 16 (= 00010000). |
| | 16 | |
| | END | |

## APPENDIX

The following are HP-IB Interface Test for the 4192A that can be run on the HP85 Personal Computer. They are functionally identical to the HP 9825B programs given in paragraph 4-31. Equipment required to execute these Programs is as follows:

| | |
|---|---|
| Personal Computer | HP85 |
| I/O ROM | hp P/N 00085-15003 |
| ROM DRAWER | HP82936A |
| HP-IB Interface Module | HP82937A |
| Sample Capacitor | 1000pF 1000nF |
| Test Fixture | HP16047A |

TEST PROGRAM 1

[PROGRAM LISTING]

```
10 ! REMOTE/LOCAL TEST
20 OPTION BASE 1
30 DIM B$[20],C$[25]
40 A1=717 @ A=7
50 B$="REMOTE/LOCAL TEST "
60 C$="LISTEN=  TALK=  REMOTE= "
70 N=0
80 S=SPOLL(A1)
90 PRINT B$
100 REMOTE A
110 OUTPUT A1 ;"T1"
120 C1$="1" @ C2$="0" @ C3$="1"
130 GOSUB 460
140 ABORTIO A
150 C1$="0" @ C2$="0" @ C3$="1"
160 GOSUB 460
170 LOCAL A
180 C1$="0" @ C2$="0" @ C3$="0"
190 GOSUB 460
200 REMOTE A1
210 C1$="1" @ C2$="0" @ C3$="1"
220 GOSUB 460
230 LOCAL LOCKOUT A
240 LOCAL A1
250 C1$="1" @ C2$="0" @ C3$="0"
260 GOSUB 460
270 REMOTE A
280 OUTPUT A1 ;"T1"
290 C1$="1" @ C2$="0" @ C3$="1"
300 GOSUB 460
310 GOSUB 530
320 N=0
330 B$="LISTEN/TALK TEST "
340 PRINT B$
350 ENTER A1 ; X,Y
360 C1$="0" @ C2$="1" @ C3$="1"
370 GOSUB 460
380 OUTPUT A1 ;"T1"
390 C1$="1" @ C2$="0" @ C3$="1"
400 GOSUB 460
410 GOSUB 530
420 ABORTIO A
430 LOCAL A
440 PRINT "END"
450 END
460 ! ***** SUB A$ *****
470 C$[8,8]=C1$ @ C$[15,15]=C2$
480 C$[24,24]=C3$
490 DISP C$;
500 INPUT A$
510 IF A$="N" THEN N=1
520 RETURN
530 ! ***** SUB PRT *****
540 PRINT B$;
550 IF N=1 THEN PRINT "FAIL" ELSE PRINT "PASS"
560 RETURN
```

Controller Instructions and Operator Responses for Test Program 1

| Controller Instructions | | Operator Response |
|---|---|---|
| Displays | Printout | |
| | REMOTE/LOCAL TEST | |
| LISTEN=1 TALK=0 REMOTE=1 ?<br>LISTEN=0 TALK=0 REMOTE=1 ?<br>LISTEN=0 TALK=0 REMOTE=0 ?<br>LISTEN=1 TALK=0 REMOTE=1 ?<br>LISTEN=1 TALK=0 REMOTE=0 ?<br>LISTEN=1 TALK=0 REMOTE=1 ? | | If the 4192A HP-IB Status Indicators and Controller Display are the same, press [Y], and [END LINE]. If not, press [N], and [END LINE]. |
| | REMOTE/LOCAL TEST PASS | If all steps are correct, this message is output. |
| | REMOTE/LOCAL TEST FAIL | If any step fails, this message is output. |
| | LISTEN/TALK TEST | |
| LISTEN=0 TALK=1 REMOTE=1 ? | | If the 4192A HP-IB Status Indicators and Controller Display are the same, press [Y], and [END LINE]. If not, press [N], and [END LINE]. |
| LISTEN=0 TALK=0 REMOTE=1 ? | | |
| | LISTEN/TALK TEST PASS | If both steps are correct, this message is output. |
| | LISTEN/TALK TEST FAIL | If any step fails, this message is output. |
| | END | |

TEST PROGRAM 2

[PROGRAM LISTING]

```
10 ! LISTENER TEST-1
20 DIM P$[10]
30 A1=717 @ A=7
40 DISP "LISTENER TEST-1"
50 REMOTE A
60 ABORTIO A
70 CLEAR A1
80 DISP "DISPLAY A(1 thru 7)";
90 INPUT P$
100 IF P$="E" THEN 120
110 OUTPUT A1 ;"A",P$ @ GOTO 80
120 OUTPUT A1 ;"A1"
130 DISP "DISPLAY B(1 thru 2)";
140 INPUT P$
150 IF P$="E" THEN 170
160 OUTPUT A1 ;"B",P$ @ GOTO 130
170 OUTPUT A1 ;"A3"
180 DISP "DISPLAY B(1 thru 3)";
190 INPUT P$
200 IF P$="E" THEN 220
210 OUTPUT A1 ;"B",P$ @ GOTO 180
220 OUTPUT A1 ;"A5"
230 DISP "DISPLAY B(1 thru 3)";
240 INPUT P$
250 IF P$="E" THEN 270
260 OUTPUT A1 ;"B",P$ @ GOTO 230
270 CLEAR A1
280 DISP "CIRCUIT MODE(1 thru 3)";
290 INPUT P$
300 IF P$="E" THEN 320
310 OUTPUT A1 ;"C",P$ @ GOTO 280
320 DISP "GAIN MODE(1 thru 2)";
330 INPUT P$
340 IF P$="E" THEN 360
350 OUTPUT A1 ;"A5N",P$ @ GOTO 320
360 DISP "ZY RANGE(1 thru 8)";
370 INPUT P$
380 IF P$="E" THEN 400
390 OUTPUT A1 ;"A1C2R",P$ @ GOTO 360
400 DISP "TRIGGER MODE(1 thru 3)";
410 INPUT P$
420 IF P$="E" THEN 440
430 OUTPUT A1 ;"T",P$ @ GOTO 400
440 DISP "END"
450 ABORTIO A
460 LOCAL A
470 END
```

Input the numeric portion* (suffix) of the HP-IB program code for each panel function of the indicated display (A or B) or mode keys (CIRCUIT MODE, GAIN MODE, ZY RANGE, TRIGGER MODE). Press [END LINE] and verify that the 4192A is set to the appropriate function or mode. For example, when Display A ? (1 thru 7) is displayed on the HP85, inputting [1] and [END LINE] will set the 4192A to impedance measurement, and the |Z|/|Y| indicator lamp on the front-panel will come one; inputting [2] and [END LINE] will set the 4192A to resistance measurement, and the R/G indicator lamp will come on. Press [E] (end) and [END LINE] after each step, e.g., after all seven functions of DISPLAY A have been checked.

*This number is printed on the front-panel, next to the indicator lamp or key.

TEST PROGRAM 3

[PROGRAM LISTING]

```
10 ! LISTENER TEST-2
20 DIM P$[10]
30 A1=717 @ A=7
40 DISP "LISTENER TEST-2"
50 REMOTE A
60 ABORTIO A
70 CLEAR A1
80 DISP "SPOT FREQ.(kHz)";
90 INPUT P$
100 IMAGE K,7A,K
110 IF P$="E" THEN 130
120 OUTPUT A1 USING 100 ; "FR",P$,"EN" @ GOTO 80
130 DISP "STEP FREQ.(kHz)";
140 INPUT P$
150 IF P$="E" THEN 170
160 OUTPUT A1 USING 100 ; "SF",P$,"EN" @ GOTO 130
170 DISP "START FREQ.(kHz)";
180 INPUT P$
190 IF P$="E" THEN 210
200 OUTPUT A1 USING 100 ; "TF",P$,"EN" @ GOTO 170
210 DISP "STOP FREQ.(kHz)";
220 INPUT P$
230 IF P$="E" THEN 250
240 OUTPUT A1 USING 100 ; "PF",P$,"EN" @ GOTO 210
250 DISP "SPOT BIAS(V)";
260 INPUT P$
270 IF P$="E" THEN 290
280 OUTPUT A1 USING 100 ; "BI",P$,"EN" @ GOTO 250
290 DISP "STEP BIAS(V)";
300 INPUT P$
310 IF P$="E" THEN 330
320 OUTPUT A1 USING 100 ; "SB",P$,"EN" @ GOTO 290
330 DISP "START BIAS(V)";
340 INPUT P$
350 IF P$="E" THEN 370
360 OUTPUT A1 USING 100 ; "TB",P$,"EN" @ GOTO 330
370 DISP "STOP BIAS(V)";
380 INPUT P$
390 IF P$="E" THEN 410
400 OUTPUT A1 USING 100 ; "PB",P$,"EN" @ GOTO 370
410 OUTPUT A1 ;"IO"
420 DISP "OSC LEVEL(V)";
430 INPUT P$
440 IF P$="E" THEN 460
450 OUTPUT A1 USING 100 ; "OL",P$,"EN" @ GOTO 420
460 DISP "END"
470 ABORTIO A
480 LOCAL A
490 END
```

Input a value for the indicated test parameter, and press [END LINE]. The indicator lamp for the test parameter should come on and the value that was input should be correctly displayed on the test parameter display (DISPLAY C). Press [E] and [END LINE] after each step.

TEST PROGRAM 4

[PROGRAM LISTING]

```
10 ! TALKER TEST
20 OPTION BASE 1
30 DIM D$[50],B$[30]
40 B$="DATA OUTPUT TEST "
50 A1=717 @ A=7
60 PRINT "TALKER TEST"
70 DISP "CONNECT A CAPACITOR TO  16047A"
80 DISP TAB(15);"PRESS [CONT] KEY"
90 PAUSE
100 PRINT B$
110 S=SPOLL(A1)
120 REMOTE A
130 ABORTIO A
140 CLEAR A1
150 OUTPUT A1 ;"A4T3"
160 TRIGGER A1
170 ENTER A1 ; X,Y
180 IMAGE 2(D.4DE,5X)
190 PRINT USING 180 ; X,Y
200 GOSUB 470
210 B$="COMPLETE "&B$
220 B$[26]="-1 "
230 PRINT B$
240 TRIGGER A1
250 ENTER A1 ; D$
260 PRINT D$
270 GOSUB 470
280 B$[26]="-2 "
290 PRINT B$
300 OUTPUT A1 ;"F1FRR"
310 TRIGGER A1
320 ENTER A1 ; D$
330 PRINT D$
340 GOSUB 470
350 B$[26]="-3 "
360 PRINT B$
370 OUTPUT A1 ;"OLR"
380 TRIGGER A1
390 ENTER A1 ; D$
400 OUTPUT A1 ;"F0"
410 PRINT D$
420 GOSUB 470
430 PRINT "END"
440 ABORTIO A
450 LOCAL A
460 END
470 ! ***** SUB *****
480 DISP "IS OUTPUT DATA CORRECT(Y or N)";
490 INPUT A$
500 PRINT B$;
510 IF A$="N" THEN PRINT "FAIL" ELSE PRINT "PASS"
520 RETURN
```

Controller Instructions and Operator Responses for Test Program 4

| Controller Instructions | | Operator Response |
|---|---|---|
| Displays | Printout | |
| | TALKER TEST | |
| CONNECT A CAPACITOR TO 16047A<br>PRESS [CONT] KEY | | Connect a capacitor (1000pF -- 1000nF) to 16047A Test Fixture. Then press [CONT]. |
| | DATA OUTPUT TEST | |
| | 1.0117E-008<br>1.2300E-002 | DISPLAY A and DISPLAY B measurement data is output to the HP85's printer. |
| IS OUTPUT DATA CORRECT (Y or N) ? | DATA OUTPUT TEST PASS<br>DATA OUTPUT TEST FAIL | If the output data is the same as the values displayed on DISPLAYs A and B, press [Y] and [END LINE]. If not, press [N] and [END LINE]. |
| | COMPLETE DATA OUTPUT TEST-1 | |
| | NCSN+10.106E-09,<br>NDFC+0.0125E+00 | Complete data of DISPLAY A AND DISPLAY B is output. |
| IS OUTPUT DATA CORRECT (Y or N) ? | | If the output data is correct, press [Y] and [END LINE]. If not, press [N] and [END LINE]. |
| | COMPLETE DATA OUTPUT TEST-1 PASS | |
| | COMPLETE DATA OUTPUT TEST-1 FAIL | |
| | COMPLETE DATA OUTPUT TEST-2 | Complete data of DISPLAY A, DISPLAY B and SPOT FREQ. is output. |
| | NCSN+10.100E-09,<br>NDFN+0.0127E+00,<br>K+0100.0000 | |

Controller Instructions and Operator Responses for Test Program 4

| Controller Instructions | | Operator Response |
|---|---|---|
| Displays | Printout | |
| IS OUTPUT DATA CORRECT (Y or N) ? | | If the output data is the same as the values displayed on DISPLAYs A and B and DISPLAY C (Test Parameter data display), press [Y] and [END LINE]. If not, press [N] and [END LINE]. |
| | COMPLETE DATA OUTPUT<br>TEST-2 PASS<br><br>COMPLETE DATA OUTPUT<br>TEST-2 FAIL | |
| | COMPLETE DATA OUTPUT<br>TEST-3 | |
| | NCSN+10.100E-09,<br>NDFN+0.0127E+00,<br>V+00001.000 | Complete data of DISPLAY A, DISPLAY B and OSC LEVEL is output. |
| IS OUTPUT DATA CORRECT (Y or N) ? | | If the output data is the same as the values displayed on DISPLAYs A and B and DISPLAY C (Test Parameter data display), press [Y] and [END LINE]. If not, press [N] and [END LINE]. |
| | COMPLETE DATA OUTPUT<br>TEST-3 PASS | |
| | COMPLETE DATA OUTPUT<br>TEST-3 FAIL | |
| | END | |

TEST PROGRAM 5

[PROGRAM LISTING]

```
10 ! SRQ TEST
20 A1=717 @ A=7
30 PRINT "SRQ TEST"
40 ON INTR 7 GOSUB 430
50 REMOTE A
60 ABORTIO A
70 CLEAR A1
80 S=0
90 PRINT "DATA READY"
100 OUTPUT A1 ;"D1T2"
110 TRIGGER A1
120 GOSUB 380
130 S=0
140 PRINT "SYNTAX ERROR"
150 OUTPUT A1 ;"DOA8"
160 GOSUB 380
170 S=0
180 PRINT "PROG. ERROR"
190 OUTPUT A1 ;"FR14000EN"
200 GOSUB 380
210 S=0
220 PRINT "TRG. TOO FAST"
230 TRIGGER A1
240 WAIT 50
250 TRIGGER A1
260 GOSUB 380
270 S=0
280 PRINT "BUSY"
290 OUTPUT A1 ;"T1W1W4"
300 WAIT 1000
310 S=SPOLL(A1)
320 PRINT S
330 OUTPUT A1 ;"AB"
340 PRINT "END"
350 ABORTIO A
360 LOCAL A
370 END
380 ! ***** SUB LOOP *****
390 ENABLE INTR 7;8
400 B=BIT(S,0) OR BIT(S,1) OR BIT(S,2) OR BIT(S,3)
410 IF B=1 THEN PRINT S @ RETURN
420 GOTO 380
430 ! ***** SUB SRQ *****
440 S=SPOLL(A1)
450 STATUS 7,1 ; S1
460 IF BIT(S,6)=0 THEN DISP "OTHER DEVICE SRQ"
470 ENABLE INTR 7;8
480 RETURN
```

Controller Instruction and Operator Responses for Test Program 5

| Controller Instructions | | Operator Response |
|---|---|---|
| Displays | Printout | |
| | SRQ TEST | |
| | DATA READY | SRQ Status Byte data should be 65 (= 01000001). |
| | 65 | |
| | SYNTAX ERROR | SRQ Status Byte data should be 66 (= 01000010). |
| | 66 | |
| | PROG. ERROR | SRQ Status Byte data should be 68 (= 01000100). |
| | 68 | |
| | TRIG. TOO FAST | SRQ Status Byte data should be 72 (= 01001000). |
| | 72 | |
| | BUSY | SRQ Status Byte data should be 16 (= 00010000). |
| | 16 | |
| | END | |

## PERFORMANCE TEST RECORD

Hewlett-Packard

Model 4192A
LF IMPEDANCE ANALYZER

Tested by _____

Date _____

Serial No. _____

| Paragraph Number | Test | | Minimum | Result Actual | Maximum |
|---|---|---|---|---|---|
| 4-9 | Measurement Signal Frequency Accuracy Test | | | | |
| | | 1MHz ($H_{CUR}$) | 0.99995MHz | ——— | 1.00005MHz |
| | | 10MHz ($H_{CUR}$) | 9.9995MHz | ——— | 10.0005MHz |
| | | 1MHz ($^{1MHz}_{Output}$) | 0.99995MHz | ——— | 1.00005MHz |
| 4-11 | Measurement Signal Level Accuracy Test | | | | |
| | OSC Level : 5mV | 5Hz | 2.65mV | ——— | 7.35mV |
| | | 100Hz | 2.75mV | ——— | 7.26mV |
| | | 1kHz | 2.75mV | ——— | 7.26mV |
| | | 10kHz | 2.75mV | ——— | 7.26mV |
| | | 100kHz | 2.75mV | ——— | 7.26mV |
| | | 1MHz | 2.75mV | ——— | 7.26mV |
| | | 13MHz | 1.83mV | ——— | 8.18mV |
| | OSC Level : 100mV | 5Hz | 91.0mV | ——— | 109.0mV |
| | | 100Hz | 92.9mV | ——— | 107.1mV |
| | | 1kHz | 93.0mV | ——— | 107.0mV |
| | | 10kHz | 93.0mV | ——— | 107.0mV |
| | | 100kHz | 93.0mV | ——— | 107.0mV |
| | | 1MHz | 93.0mV | ——— | 107.0mV |
| | | 13MHz | 74.5mV | ——— | 125.5mV |
| | OSC Level : 105mV | 5Hz | 87.7mV | ——— | 122.35mV |
| | | 100Hz | 89.7mV | ——— | 120.4mV |
| | | 1kHz | 89.7mV | ——— | 120.3mV |
| | | 10kHz | 89.7mV | ——— | 120.3mV |
| | | 100kHz | 89.7mV | ——— | 120.3mV |
| | | 1MHz | 89.7mV | ——— | 120.3mV |
| | | 13MHz | 70.3mV | ——— | 139.7mV |

| Paragraph Number | Test | | Minimum | Result Actual | Maximum |
|---|---|---|---|---|---|
| 4-11 (continued) | Measurement Signal Level Accuracy Test | | | | |
| | OSC Level : 1.1V | 5Hz | 1.013V | ——— | 1.187V |
| | | 100Hz | 1.034V | ——— | 1.166V |
| | | 1kHz | 1.035V | ——— | 1.165V |
| | | 10kHz | 1.035V | ——— | 1.165V |
| | | 100kHz | 1.035V | ——— | 1.165V |
| | | 1MHz | 1.035V | ——— | 1.165V |
| | | 13MHz | 0.832V | ——— | 1.369V |
| 4-13 | Capacitance Accuracy Test | | | | |
| | Standard Capacitor : 1pF | | | | |
| | Capacitance | 100kHz | C.V. - 5fF | ——— | C.V. + 5fF |
| | | 500kHz | C.V. - 5fF | ——— | C.V. + 5fF |
| | | 1MHz | C.V. - 2.4fF | ——— | C.V. + 2.4fF |
| | | 5MHz | C.V. - 10fF | ——— | C.V. + 10fF |
| | | 10MHz | C.V. - 21.6fF | ——— | C.V. + 21.6fF |
| | | 13MHz | C.V. - 28.0fF | ——— | C.V. + 28.0fF |
| | Dissipation | 100kHz | - 0.0191 | ——— | + 0.0191 |
| | | 500kHz | - 0.0078 | ——— | + 0.0078 |
| | | 1MHz | - 0.0038 | ——— | + 0.0038 |
| | | 5MHz | - 0.0075 | ——— | + 0.0075 |
| | | 10MHz | - 0.0217 | ——— | + 0.0217 |
| | | 13MHz | - 0.0280 | ——— | + 0.0280 |
| | Standard Capacitor : 10pF | | | | |
| | Capacitance | 10kHz | C.V. - 50fF | ——— | C.V. + 50fF |
| | | 50kHz | C.V. - 50fF | ——— | C.V. + 50fF |
| | | 100kHz | C.V. - 24fF | ——— | C.V. + 24fF |
| | | 500kHz | C.V. - 40fF | ——— | C.V. + 40fF |
| | | 1MHz | C.V. - 14fF | ——— | C.V. + 14fF |
| | | 5MHz | C.V. - 80fF | ——— | C.V. + 80fF |
| | | 10MHz | C.V. - 163fF | ——— | C.V. + 163fF |
| | | 13MHz | C.V. - 211fF | ——— | C.V. + 211fF |
| | Dissipation | 10kHz | - 0.0191 | ——— | + 0.0191 |
| | | 50kHz | - 0.0078 | ——— | + 0.0078 |
| | | 100kHz | - 0.0038 | ——— | + 0.0038 |
| | | 500kHz | - 0.0021 | ——— | + 0.0021 |
| | | 1MHz | - 0.0013 | ——— | + 0.0013 |
| | | 5MHz | - 0.0063 | ——— | + 0.0063 |
| | | 10MHz | - 0.0174 | ——— | + 0.0174 |
| | | 13MHz | - 0.0224 | ——— | + 0.0224 |

C.V. = Calibrated Value

| Paragraph Number | Test | | Minimum | Result Actual | Maximum |
|---|---|---|---|---|---|
| 4-13 (continued) | Capacitance Accuracy Test | | | | |
| | Standard Capacitor : 100pF | | | | |
| | Capacitance | 1kHz | C.V. - 0.5pF | ——— | C.V. + 0.5pF |
| | | 5kHz | C.V. - 0.5pF | ——— | C.V. + 0.5pF |
| | | 10kHz | C.V. - 0.24pF | ——— | C.V. + 0.24pF |
| | | 50kHz | C.V. - 0.4pF | ——— | C.V. + 0.4pF |
| | | 100kHz | C.V. - 0.14pF | ——— | C.V. + 0.14pF |
| | | 500kHz | C.V. - 0.4pF | ——— | C.V. + 0.4pF |
| | | 1MHz | C.V. - 0.14pF | ——— | C.V. + 0.14pF |
| | | 5MHz | C.V. - 0.7pF | ——— | C.V. + 0.7pF |
| | | 10MHz | C.V. - 2.91pF | ——— | C.V. + 2.91pF |
| | | 13MHz | C.V. - 4.74pF | ——— | C.V. + 4.74pF |
| | Dissipation | 1kHz | - 0.0191 | ——— | + 0.0191 |
| | | 5kHz | - 0.0078 | ——— | + 0.0078 |
| | | 10kHz | - 0.0038 | ——— | + 0.0038 |
| | | 50kHz | - 0.0021 | ——— | + 0.0021 |
| | | 100kHz | - 0.0013 | ——— | + 0.0013 |
| | | 500kHz | - 0.0021 | ——— | + 0.0021 |
| | | 1MHz | - 0.0013 | ——— | + 0.0013 |
| | | 5MHz | - 0.0056 | ——— | + 0.0056 |
| | | 10MHz | - 0.0354 | ——— | + 0.0354 |
| | | 13MHz | - 0.0581 | ——— | + 0.0581 |
| | Standard Capacitor : 1000pF | | | | |
| | Capacitance | 100Hz | C.V. - 50pF | ——— | C.V. + 50pF |
| | | 400Hz | C.V. - 40pF | ——— | C.V. + 40pF |
| | | 1kHz | C.V. - 2.4pF | ——— | C.V. + 2.4pF |
| | | 5kHz | C.V. - 4pF | ——— | C.V. + 4pF |
| | | 10kHz | C.V. - 1.4pF | ——— | C.V. + 1.4pF |
| | | 50kHz | C.V. - 4pF | ——— | C.V. + 4pF |
| | | 100kHz | C.V. - 1.4pF | ——— | C.V. + 1.4pF |
| | | 500kHz | C.V. - 4pF | ——— | C.V. + 4pF |
| | | 1MHz | C.V. - 1.4pF | ——— | C.V. + 1.4pF |
| | Dissipation | 100Hz | - 0.026 | ——— | + 0.026 |
| | | 400Hz | - 0.009 | ——— | + 0.009 |
| | | 1kHz | - 0.0038 | ——— | + 0.0038 |
| | | 5kHz | - 0.0021 | ——— | + 0.0021 |
| | | 10kHz | - 0.0014 | ——— | + 0.0014 |
| | | 50kHz | - 0.0021 | ——— | + 0.0021 |
| | | 100kHz | - 0.0013 | ——— | + 0.0013 |
| | | 500kHz | - 0.0021 | ——— | + 0.0021 |
| | | 1MHz | - 0.0013 | ——— | + 0.0013 |

C.V. = Calibrated Value

| Paragraph Number | Test | | Minimum | Result Actual | Maximum |
|---|---|---|---|---|---|
| 4-15 | Resistance Accuracy Test | | | | |
| | Standard Resistor : 100Ω | 5Hz | C.V. - 1.30Ω | ——— | C.V. + 1.30Ω |
| | | 10Hz | C.V. - 0.72Ω | ——— | C.V. + 0.72Ω |
| | | 50Hz | C.V. - 0.32Ω | ——— | C.V. + 0.32Ω |
| | | 100Hz | C.V. - 0.19Ω | ——— | C.V. + 0.19Ω |
| | | 400Hz | C.V. - 0.15Ω | ——— | C.V. + 0.15Ω |
| | | 1kHz | C.V. - 0.13Ω | ——— | C.V. + 0.13Ω |
| | | 5kHz | C.V. - 0.13Ω | ——— | C.V. + 0.13Ω |
| | | 10kHz | C.V. - 0.13Ω | ——— | C.V. + 0.13Ω |
| | | 50kHz | C.V. - 0.13Ω | ——— | C.V. + 0.13Ω |
| | | 100kHz | C.V. - 0.13Ω | ——— | C.V. + 0.13Ω |
| | | 500kHz | C.V. - 0.13Ω | ——— | C.V. + 0.13Ω |
| | | 1MHz | C.V. - 0.13Ω | ——— | C.V. + 0.13Ω |
| | | 5MHz | C.V. - 0.41Ω | ——— | C.V. + 0.41Ω |
| | | 10MHz | C.V. - 2.91Ω | ——— | C.V. + 2.91Ω |
| | | 13MHz | C.V. - 4.74Ω | ——— | C.V. + 4.74Ω |
| | Standard Resistor : 1kΩ | 5Hz | C.V. - 23.0Ω | ——— | C.V. + 23.0Ω |
| | | 10Hz | C.V. - 14.0Ω | ——— | C.V. + 14.0Ω |
| | | 50Hz | C.V. - 7.0Ω | ——— | C.V. + 7.0Ω |
| | | 100Hz | C.V. - 5.0Ω | ——— | C.V. + 5.0Ω |
| | | 400Hz | C.V. - 4.0Ω | ——— | C.V. + 4.0Ω |
| | | 1kHz | C.V. - 3.3Ω | ——— | C.V. + 3.3Ω |
| | | 5kHz | C.V. - 3.3Ω | ——— | C.V. + 3.3Ω |
| | | 10kHz | C.V. - 3.3Ω | ——— | C.V. + 3.3Ω |
| | | 50kHz | C.V. - 3.3Ω | ——— | C.V. + 3.3Ω |
| | | 100kHz | C.V. - 3.3Ω | ——— | C.V. + 3.3Ω |
| | | 500kHz | C.V. - 3.3Ω | ——— | C.V. + 3.3Ω |
| | | 1MHz | C.V. - 3.3Ω | ——— | C.V. + 3.3Ω |
| | | 5MHz | C.V. - 6.2Ω | ——— | C.V. + 6.2Ω |
| | | 10MHz | C.V. - 31.0Ω | ——— | C.V. + 31.0Ω |
| | | 13MHz | C.V. - 49.3Ω | ——— | C.V. + 49.3Ω |

| Paragraph Number | Test | | Result | | |
|---|---|---|---|---|---|
| | | | Minimum | Actual | Maximum |
| 4-15 (continued) | Resistance Accuracy Test | | | | |
| | Standard Resistor : 10kΩ | 5Hz | C.V. - 0.206kΩ | ——— | C.V. + 0.206kΩ |
| | | 10Hz | C.V. - 0.119kΩ | ——— | C.V. + 0.119kΩ |
| | | 50Hz | C.V. - 0.050kΩ | ——— | C.V. + 0.050kΩ |
| | | 100Hz | C.V. - 0.041kΩ | ——— | C.V. + 0.041kΩ |
| | | 400Hz | C.V. - 0.033kΩ | ——— | C.V. + 0.033kΩ |
| | | 1kHz | C.V. - 0.033kΩ | ——— | C.V. + 0.033kΩ |
| | | 5kHz | C.V. - 0.033kΩ | ——— | C.V. + 0.033kΩ |
| | | 10kHz | C.V. - 0.033kΩ | ——— | C.V. + 0.033kΩ |
| | | 50kHz | C.V. - 0.033kΩ | ——— | C.V. + 0.033kΩ |
| | | 100kHz | C.V. - 0.033kΩ | ——— | C.V. + 0.033kΩ |
| | | 500kHz | C.V. - 0.033kΩ | ——— | C.V. + 0.033kΩ |
| | | 1MHz | C.V. - 0.033kΩ | ——— | C.V. + 0.033kΩ |
| | Standard Resistor : 100kΩ | 5Hz | C.V. - 2.43kΩ | ——— | C.V. + 2.43kΩ |
| | | 10Hz | C.V. - 1.38kΩ | ——— | C.V. + 1.38kΩ |
| | | 50Hz | C.V. - 0.54kΩ | ——— | C.V. + 0.54kΩ |
| | | 100Hz | C.V. - 0.43kΩ | ——— | C.V. + 0.43kΩ |
| | | 400Hz | C.V. - 0.33kΩ | ——— | C.V. + 0.33kΩ |
| | | 1kHz | C.V. - 0 33kΩ | ——— | C.V. + 0.33kΩ |
| | | 5kHz | C.V. - 0.33kΩ | ——— | C.V. + 0.33kΩ |
| | | 10kHz | C.V. - 0.33kΩ | ——— | C.V. + 0.33kΩ |
| | | 50kHz | C.V. - 0.33kΩ | ——— | C.V. + 0.33kΩ |
| | | 100kHz | C.V. - 0.33kΩ | ——— | C.V. + 0.33kΩ |
| 4-17 | Frequency Phase Accuracy Test | | | | |
| | | 100Hz | C.V. - 0.033Ω | ——— | C.V. + 0.033Ω |
| | | 400Hz | C.V. - 0.028Ω | ——— | C.V. + 0.028Ω |
| | | 1kHz | C.V. - 0.026Ω | ——— | C.V. + 0.026Ω |
| | | 5kHz | C.V. - 0.026Ω | ——— | C.V. + 0.026Ω |
| | | 10kHz | C.V. - 0.026Ω | ——— | C.V. + 0.026Ω |
| | | 50kHz | C.V. - 0.026Ω | ——— | C.V. + 0.026Ω |
| | | 100kHz | C.V. - 0.027Ω | ——— | C.V. + 0.027Ω |
| | | 500kHz | C.V. - 0.029Ω | ——— | C.V. + 0.029Ω |
| | | 1MHz | C.V. - 0.032Ω | ——— | C.V. + 0.032Ω |
| | | 5MHz | C.V. - 0.158Ω | ——— | C.V. + 0.158Ω |
| | | 10MHz | C.V. - 0.462Ω | ——— | C.V. + 0.462Ω |
| | | 13MHz | C.V. - 0.726Ω | ——— | C.V. + 0.726Ω |

C.V. = Calibrated Value

| Paragraph Number | Test | | Minimum | Result Actual | Maximum |
|---|---|---|---|---|---|
| 4-19 | Amplitude/Phase (0dB) Accuracy Test | | | | |
| | Amplitude | 5Hz | - 0.096dB | ——— | + 0.096dB |
| | | 10Hz | - 0.056dB | ——— | + 0.056dB |
| | | 50Hz | - 0.029dB | ——— | + 0.029dB |
| | | 100Hz | - 0.020dB | ——— | + 0.020dB |
| | | 500Hz | - 0.020dB | ——— | + 0.020dB |
| | | 1kHz | - 0.020dB | ——— | + 0.020dB |
| | | 5kHz | - 0.020dB | ——— | + 0.020dB |
| | | 10kHz | - 0.020dB | ——— | + 0.020dB |
| | | 50kHz | - 0.090dB | ——— | + 0.090dB |
| | | 100kHz | - 0.090dB | ——— | + 0.090dB |
| | | 500kHz | - 0.090dB | ——— | + 0.090dB |
| | | 1MHz | - 0.090dB | ——— | + 0.090dB |
| | | 5MHz | - 0.170dB | ——— | + 0.170dB |
| | | 10MHz | - 0.450dB | ——— | + 0.450dB |
| | | 13MHz | - 0.570dB | ——— | + 0.570dB |
| | Phase | 5Hz | - 0.48 deg | ——— | + 0.48 deg |
| | | 10Hz | - 0.28 deg | ——— | + 0.28 deg |
| | | 50Hz | - 0.15 deg | ——— | + 0.15 deg |
| | | 100Hz | - 0.10 deg | ——— | + 0.10 deg |
| | | 500Hz | - 0.10 deg | ——— | + 0.10 deg |
| | | 1kHz | - 0.10 deg | ——— | + 0.10 deg |
| | | 10kHz | - 0.10 deg | ——— | + 0.10 deg |
| | | 50kHz | - 0.16 deg | ——— | + 0.16 deg |
| | | 100kHz | - 0.16 deg | ——— | + 0.16 deg |
| | | 500kHz | - 0.16 deg | ——— | + 0.16 deg |
| | | 1MHz | - 0.16 deg | ——— | + 0.16 deg |
| | | 5MHz | - 0.48 deg | ——— | + 0.48 deg |
| | | 10MHz | - 1.60 deg | ——— | + 1.60 deg |
| | | 13MHz | - 2.08 deg | ——— | + 2.08 deg |
| 4-21 | Amplitude Accuracy Test | | | | |
| | Attenuator setting : - 10dB | 10kHz | C.V. - 0.020dB | ——— | C.V. + 0.020dB |
| | | 1MHz | C.V. - 0.090dB | ——— | C.V. + 0.090dB |
| | | 10MHz | C.V. - 0.450dB | ——— | C.V. + 0.450dB |
| | Attenuator setting : - 30dB | 10kHz | C.V. - 0.07dB | ——— | C.V. + 0.07dB |
| | | 1MHz | C.V. - 0.17dB | ——— | C.V. + 0.17dB |
| | | 10MHz | C.V. - 0.89dB | ——— | C.V. + 0.89dB |
| | Attenuator setting : - 50dB | 10kHz | C.V. - 0.21dB | ——— | C.V. + 0.21dB |
| | | 1MHz | C.V. - 0.24dB | ——— | C.V. + 0.24dB |
| | | 10MHz | C.V. - 1.33dB | ——— | C.V. + 1.33dB |

C.V. = Calibrated Value

| Paragraph Number | Test | Minimum | Result Actual | Maximum |
|---|---|---|---|---|
| 4-21 (continued) | Amplitude Accuracy Test | | | |
| | Attenuator setting : - 70 dB 10 kHz | C.V. - 2.01 dB | ——— | C.V. + 2.01 dB |
| | 1 MHz | C.V. - 2.04 dB | ——— | C.V. + 2.04 dB |
| | 10 MHz | C.V. - 11.23 dB | ——— | C.V. + 11.23 dB |
| 4-23 | Absolute Amplitude Accuracy Test | | | |
| | 5 Hz | C.V. - 0.60 dBV | ——— | C.V. + 0.60 dBV |
| | 10 Hz | C.V. - 0.50 dBV | ——— | C.V. + 0.50 dBV |
| | 30 Hz | C.V. - 0.43 dBV | ——— | C.V. + 0.43 dBV |
| | 100 Hz | C.V. - 0.40 dBV | ——— | C.V. + 0.40 dBV |
| | 300 Hz | C.V. - 0.40 dBV | ——— | C.V. + 0.40 dBV |
| | 1 kHz | C.V. - 0.40 dBV | ——— | C.V. + 0.40 dBV |
| | 3 kHz | C.V. - 0.40 dBV | ——— | C.V. + 0.40 dBV |
| | 10 kHz | C.V. - 0.40 dBV | ——— | C.V. + 0.40 dBV |
| | 30 kHz | C.V. - 0.40 dBV | ——— | C.V. + 0.40 dBV |
| | 75 kHz | C.V. - 0.40 dBV | ——— | C.V. + 0.40 dBV |
| | 100 kHz | C.V. - 0.40 dBV | ——— | C.V. + 0.40 dBV |
| | 300 kHz | C.V. - 0.40 dBV | ——— | C.V. + 0.40 dBV |
| | 1 MHz | C.V. - 0.40 dBV | ——— | C.V. + 0.40 dBV |
| | 3 MHz | C.V. - 0.64 dBV | ——— | C.V. + 0.64 dBV |
| | 10 MHz | C.V. - 1.20 dBV | ——— | C.V. + 1.20 dBV |
| | 13 MHz | C.V. - 1.44 dBV | ——— | C.V. + 1.44 dBV |
| 4-25 | Phase Accuracy Test | | | |
| | 0 deg | | ——— | |
| | - 22.5 deg | - 22.56 deg | ——— | - 22.44 deg |
| | - 45 deg | - 45.06 deg | ——— | - 44.94 deg |
| | - 67.5 deg | - 67.56 deg | ——— | - 67.44 deg |
| | - 90 deg | - 90.06 deg | ——— | - 89.94 deg |
| | - 112.5 deg | - 112.56 deg | ——— | - 112.44 deg |
| | - 135 deg | - 135.06 deg | ——— | - 134.94 deg |
| | - 157.5 deg | - 157.56 deg | ——— | - 157.44 deg |
| | - 180 deg | - 179.94 deg | ——— | + 179.94 deg |
| | + 157.5 deg | + 157.44 deg | ——— | + 157.56 deg |
| | + 135 deg | + 134.94 deg | ——— | + 135.06 deg |
| | + 112.5 deg | + 112.44 deg | ——— | + 112.56 deg |
| | + 90 deg | + 89.94 deg | ——— | + 90.06 deg |
| | + 67.5 deg | + 67.44 deg | ——— | + 67.56 deg |
| | + 45 deg | + 44.94 deg | ——— | + 45.06 deg |
| | +22.5 deg | + 22.44 deg | ——— | + 22.56 deg |

C.V. = Calibrated Value

| Paragraph Number | Test | Minimum | Result Actual | Maximum |
|---|---|---|---|---|
| 4-27 | DC Bias Voltage Accuracy Test | | | |
| | 0V | - 5mV | ——— | + 5mV |
| | 10mV | + 5mV | ——— | + 15mV |
| | 100mV | + 95mV | ——— | + 105mV |
| | 1V | + 0.990V | ——— | + 1.010V |
| | 10V | + 9.945V | ——— | + 10.055V |
| | 35V | + 34.82V | ——— | + 35.18V |
| | - 10mV | - 15mV | ——— | - 5mV |
| | - 100mV | - 105mV | ——— | - 95mV |
| | - 1V | - 1.010V | ——— | - 0.990V |
| | - 10V | - 10.055V | ——— | - 9.945V |
| | - 35V | - 35.18V | ——— | - 34.82V |
| 4-29 | Recorder Output Voltage Accuracy Test | | | |
| | 0V (LL) | - 20mV | ——— | + 20mV |
| | + 1V (UR) | + 0.995V + 0V* | ——— | + 1.005V + 0V* |
| | - 1V (SELFTEST 7) | - 1.005V + 0V* | ——— | - 0.995V + 0V* |
| | *D.C. OFFSET [ = Actual voltage of 0V (LL) ] | | | |
| 4-31 | HP-IB Test | | | |
| | Remote/Local Test | ☐ PASS | ——— | ☐ FAIL |
| | Listen/Talk Test | ☐ PASS | ——— | ☐ FAIL |
| | Listener Test – 1 | ☐ PASS | ——— | ☐ FAIL |
| | Listener Test – 2 | ☐ PASS | ——— | ☐ FAIL |
| | Talker Test | ☐ PASS | ——— | ☐ FAIL |
| | Data Output Test | ☐ PASS | ——— | ☐ FAIL |
| | Complete Data Output Test – 1 | ☐ PASS | ——— | ☐ FAIL |
| | Complete Data Output Test – 2 | ☐ PASS | ——— | ☐ FAIL |
| | Complete Data Output Test – 3 | ☐ PASS | ——— | ☐ FAIL |
| | SRQ Test | ☐ PASS | ——— | ☐ FAIL |

# SECTION V
# ADJUSTMENT

## 5-1. INTRODUCTION

5-2. This section describes the adjustments and checks required to return the 4192A to the specifications listed in Table 1-1 after repairs have been made. These adjustments and checks can also be performed along with periodic maintenance to keep the instrument in optimum operating condition. The recommended adjustment cycle for the 4192A is twice a year. All adjustable components referred to in the adjustment procedures are listed in Table 5-1. If proper performance cannot be achieved after adjustment, refer to the troubleshooting procedures described in Section VIII.

*Note: To ensure proper results and instrument operation, Hewlett-Packard suggests a 60 minute warm-up and stabilization period before performing any of the adjustments described here.*

## 5-3. SAFETY REQUIREMENTS

5-4. Although the 4192A was designed in accordance with international safety standards, this manual contains information, cautions, and warnings which must be followed to ensure operator safety and to keep the instrument in a safe and serviceable condition. Adjustments described in this section should be performed by qualified service personnel only.

**WARNING**

**ANY INTERRUPTION OF THE PROTECTIVE (GROUNDED) CONDUCTOR (INSIDE OR OUTSIDE THE INSTRUMENT) OR DISCONNECTION OF THE PROTECTIVE EARTH TERMINAL IS LIKELY TO MAKE THE INSTRUMENT DANGEROUS. INTENTIONAL INTERRUPTION, FOR ANY REASON, IS PROHIBITED.**

5-5. The removal or opening of covers for removal or adjustment of parts other than those which are accessible by hand will exoise live parts.

5-6. Capacitors in the instrument may still be charged even if the instrument has been disconnected from the power source (AC line) for an extended period of time.

**WARNING**

**ADJUSTMENTS DESCRIBED IN THIS SECTION ARE PERFORMED WITH POWER SUPPLIED AND PROTECTIVE COVERS REMOVED. ENERGY EXISTING AT MANY POINTS MAY, IF CONTACTED, RESULT IN SERIOUS PERSONAL INJURY.**

## 5-7. EQUIPMENT REQUIRED

5-8. All the equipment required to perform the adjustments described in this section are listed in Table 4-1. Each piece of equipment listed in Table 4-1 should be calibrated to satisfy its own specifications, as well as those of the required characteristics. If the recommended model is not available, any instrument whose specifications equal or surpass those of the recommended model may be used instead.

## 5-9. FACTORY SELECTED COMPONENTS

5-10. Factory selected components are identifiable by an asterisk (*) adjacent to the reference designator on the schematic diagrams in Section VIII (only nominal values are given). Table 5-2 lists the reference designators of all factory selected components. Also listed in Table 5-2 are the nominal value range of each component and a brief description of how each component affects instrument performance.

Adjustable components, with reference designators, are listed in Table 5-1. This table also lists the name of the adjustment and its purpose.

## 5-11. ADJUSTMENT RELATIONSHIPS

5-12. The adjustment procedures described in this section, beginning with paragraph 5-17, are interactive and therefore should be performed in the sequence given. Ignoring or changing the order of the procedures may make it impossible to obtain optimum instrument performance. Table 5-3 lists the necessary adjustment procedures to follow after the instrument has been repaired.

## 5-13. ADJUSTMENT LOCATIONS

5-14. To help locate the appropriate adjustment points, the locations of the components to be adjusted are shown in Figure 5-20 The locations of factory selected components, connectors, and other components related to the adjustments are shown in the individual board assembly-component illustrations (fold out service sheets) in Section VIII.

## 5-15. INITIAL OPERATING PROCEDURE

5-16. Before proceeding with the adjustments described starting in paragraph 5-17, perform the following three preliminary procedures. These procedures provide access to the various adjustment points and facilitate a thoroughgoing adjustment. Initial Control Settings, described in paragraph 3-9, must be used for each adjustment. Exceptions to these settings will be noted as they occur. After completing an adjustment, return the 4192A's controls to the initial control settings.

### [BASIC OPERATING CHECK]

Check that the instrument's line voltage selector switches, located on the rear panel, are set to the positions appropriate for the local line voltage. This should be performed before proceeding with any of the adjustments.

After the recommended 3 minute warm-up period, the instrument should pass the SELF TEST (no error message should appear), and the initial control settings listed in Figure 3-5 should be automatically set in preparation for measurements. If the instrument displays an error message or does not have the correct initial control settings, refer to the troubleshooting procedures given in Section VIII.

In several of the adjustment, Manual Operating Self-Tests (SELFTEST 1 to 8) are used. The key setings for these Self-Tests are given in the procedure for each adjustment and are listed in Table 5-4 on page 5-30. To release each SELF TEST, press BLUE key and SELF TEST key.

### [TOP/BOTTOM COVER REMOVAL]

a. Remove the two plastic instrument-feet located at the upper corners of the rear panel.

b. Fully loosen the top cover retaining screw located at the rear of the top cover.

c. Slide the top cover towards the rear and lift off.

### [BOARD ASSEMBLY ACCESS]

The A6, A7, and A8 boards are mounted on a plate that is hinged at the rear and opens much like the hood of an automobile. It is secured by six screws and two plastic fasteners.

a. Fully loosen the six screws locating at the side of the plate.

b. Release the fasteners by grasping them between thumb and forefinger and pulling up.

c. Raise the mounting plate until it comes to rest at the rear of the instrument. Be sure that the safety catch at the left-rear of the plate is locked in place. The internal shield-plate that covers the A2, A3, A4, and A9 boards will be visible.

**CAUTION**

**Allowing the mounting plate to slam down when opening or closing can damage the instrument.**

d. Remove the internal shield-plate by loosening the three screws.

**WARNING**

**AS A SAFETY PRECAUTION AGAINST POSSIBLE ELECTRICAL SHOCK HAZARDS AND RESULTANT INJURY, USE INSULATED TOOLS FOR ALL ADJUSTMENTS.**

**Table 5-1. Adjustable Components**

| Reference Designation | Name of Control | Adjustment Purpose |
|---|---|---|
| A7R66<br>(Para 5-17) | F-ADJ | Sets the frequency of the power supply switching driver. |
| A7R62<br>(Para 5-17) | V-ADJ | Sets the power supply voltage by adjusting the switching duty cycle. |
| A8R71<br>(Para 5-19) | ZERO ADJ | Sets the bias output voltage to zero. |
| A8R54<br>(Para 5-19) | GAIN ADJ | Sets the gain of the bias amplifier. |
| A3R49<br>(Para 5-21) | 40M ADJ | Sets the frequency of the 40 MHz VCXO. |
| A4R79<br>R80<br>R83<br>(Para 5-23) | VR1<br>VR2<br>VR4 | Minimize the level of the 3kHz, 300Hz, and 3Hz spurious' from the API. |
| A4R31<br>(Para 5-25) | VR5 | Minimizes the level of the 100kHz and 200kHz spurious' from S/H. |
| A12R34<br>R28<br>(Para 5-27) | 1V ADJ<br>105mV ADJ | Set the Test Signal Oscillator level. |
| A11R67<br>C32<br>R119<br>C52<br>(Para 5-31) | MF TRACKING<br>HF $\phi$<br>LF TRACKING<br>HF MAG | Set the trackability of the VRD. |
| A11R100<br>C71<br>R105<br>C74<br>R81<br>C64<br>(Para 5-33) | ATT1 MAG<br>ATT1 $\phi$<br>ATT2 MAG<br>ATT2 $\phi$<br>ATT3 MAG<br>ATT3 $\phi$ | Properly set the VRD attenuators. |
| A11R45<br>R46<br>(Para 5-35) | IF1 GAIN<br>IF2 GAIN | Set the gain of the IF amplifier for two intermediate frequencies. |
| A1R101<br>R104<br>(Para 5-37) | | Eliminate DC offset voltage from the phase detector. |
| A1R183<br>R182<br>(Para 5-39) | | Set the amplitude of $L_{CUR}$ amplifier. |
| A1C5<br>(Para 5-41) | | Minimizes residual phase offset. |
| A1S1<br>(Para 5-43) | | Sets the phase difference of the two phase detectors to 90°. |
| A1C20<br>C22<br>(Para 5-45) | $\phi$ADJ (10kΩ)<br>$\phi$ADJ ( 1 kΩ) | Range resistor compensation at 10MHz. |

**Table 5-I Adjustable Components (cont'd)**

| Reference Designator | Name of Control | Adjustment Purpose |
|---|---|---|
| A9R6<br>(Para 5- 7) | +2V ADJ | Sets the analog output reference voltage. |
| A9R5<br>R24<br>R25<br>(Para 5-47) | DISP A ADJ<br>DISP B ADJ<br>DISP C ADJ | Set the +1V analog output voltage. |

**Table 5-2. Factory Selected Components**

| Component | Nominal Value Range | Effect on Performance |
|---|---|---|
| | At the time this manual was printed, there were no factory selected components. Refer to Manual Changes sheet supplement for a list of the factory selected components that may have been added after publication. | |

**Table 5-3. Adjustment Requirements**

| Assembly repaired or replaced | Required adjustments |
|---|---|
| A1 Range Resistor/Null Detector<br>(P/N 04192-66501) | Para 5-37 thru 5-45 (A1)<br>Para 5-27 (A12) |
| A2 Phase Detector/A-D Converter<br>(P/N 04192-66502) | Para 5-29 thru 5-35 (A11) |
| A3 Reference Frequency Generator<br>(P/N 04192-66503) | Para 5-21 (A3)<br>Para 5-37 thru 5-45 (A1) |
| A4 Fractional N Loop<br>(P/N 04192-66504) | Para 5-23 and 5-25 (A4) |
| A5 Display and Keyboard Control<br>(P/N 04192-66505) | None |
| A6 Microprocessor Digital Control<br>(P/N 04192-66506) | None |
| A7 Power Supply<br>(P/N 04192-66507) | Para 5-17 (A7)<br>Para 5-23 and 5-25 (A4)<br>Para 5-47 (A9) |
| A8 Floating Power Supply/Bias Supply<br>(P/N 04192-66508) | Para 5-19 (A8) |
| A9 Analog Recorder Output<br>(P/N 04192-66509) | Para 5-47 (A9) |
| A10 Battery and Charger<br>(P/N 04192-66510) | None |
| A11 Process Amplifier<br>(P/N 04192-66511) | Para 5-29 thru 5-35 (A11)<br>Para 5-37 thru 5-45 (A1) |
| A12 Modulator<br>(P/N 04192-66512) | Para 5-27 (A12)<br>Para 5-37 thru 5-45 (A1) |

## 5-17. A7 POWER SUPPLY ADJUSTMENT

5-18. This adjustment is divided into two parts: (1) OSC (Power Supply Drive Control Oscillator) Frequency Adjustment and (2) Output Voltage Adjustment.

### PURPOSE:

This adjustment accurately sets the frequency of the Power Supply Drive Control Oscillator and the Power Supply Output Voltage.

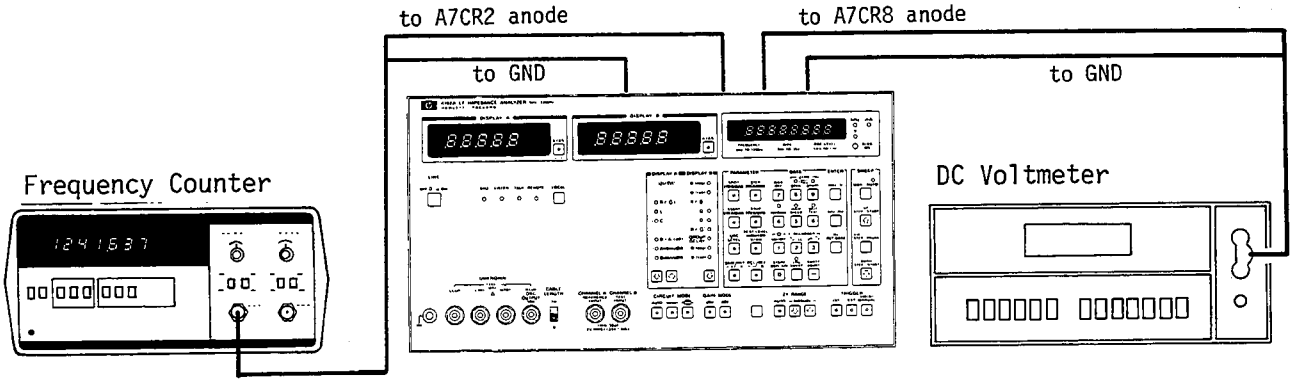


**Figure 5-1. A7 Power Supply Adjustment Setup.**

### EQUIPMENT:

| | |
|---|---|
| Frequency Counter | HP5314A |
| DC Voltmeter | HP3465A |
| Dual Banana Plug-to-Alligator Clip Cable | HP11002A |
| BNC (m)-to-Dual Banana Plug Adapter | HP P/N 1250-1264 |

### PROCEDURE:

(1) OSC Frequency Adjustment

a. Connect the dual banana-to-alligator clip cable to the 5314A using the BNC-to-dual banana plug adapter.

b. Connect the high lead to the anode of either A7CR2 or CR3 and connect the low lead to the chassis as shown in Figure 5-1.

c. Adjust A7R66 (F-ADJ) until the reading on the 5314A is 29.5kHz ±0.1kHz.

(2) Output Voltage Adjustment

a. Connect the dual banana plug-to-alligator clip cable to the 3465A.

b. Set the 3465A's controls as follows:

| | |
|---|---|
| FUNCTION | ⎓ V |
| RANGE | AUTO |
| Other Controls | Any setting |

c. Connect the high lead to the anode of A7CR8 and the low lead to the chassis.

d. Adjust A7R62 (V-ADJ) until the reading on the 3465A is 5.00V ±0.01V.

## 5-19. A8 DC BIAS CHECK AND ADJUSTMENT

5-20. This check and adjustment is divided into four parts: (1) ±40V Unregulated Bias Check, (2) Zero Bias Adjustment, (3) Gain Adjustment, and (4) Full Scale Check.

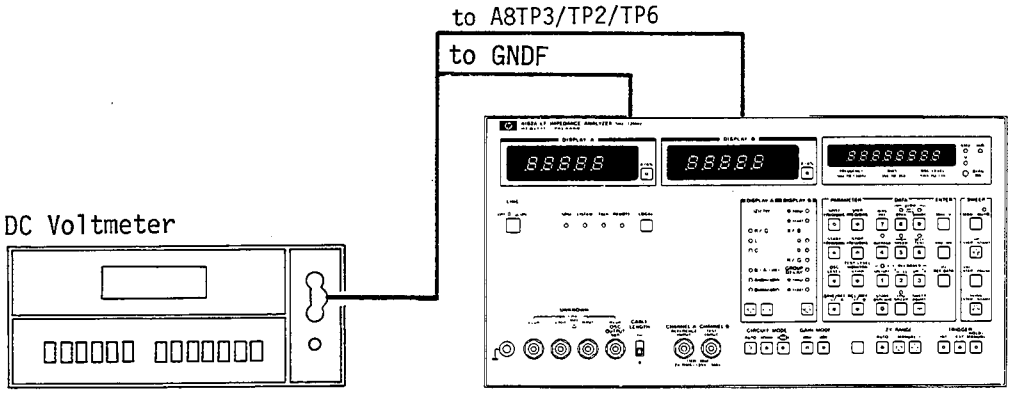


**Figure 5-2. A8 DC Bias Check and Adjustment Setup.**

### PURPOSE:

This adjustment properly sets the DC Bias Supply output voltage.

### EQUIPMENT:

| | |
|---|---|
| DC Voltmeter | HP3465A |
| Dual Banana Plug-to-Alligator Clip Cable | HP11002A |

### PROCEDURE:

(1) ±40V Unregulated Bias Check

a. Set the 3465A's controls as follows:

| | |
|---|---|
| FUNCTION | ⎓V |
| RANGE | AUTO |
| Other Controls | Any setting |

b. Connect the dual banana-to-alligator clip cable to the 3465A.

c. Connect the high lead to A8TP3 and the low lead to "GNDF" next to A8TP3 as shown in Figure 5-2.

d. Check that the reading on the 3465A is between +38V and +45V.

e. Connect the high lead to A8TP2 and check that the reading on the 3465A is between -38V and -45V.

(2) Zero Bias Adjustment

a. Remove the smaller of the two shield covers from the A8 board.

b. Connect the high lead to A8TP6.

c. Set the 4192A's SPOT BIAS to 0V ( Blue SPOT EBEQ/BIAS 0 ENTER MHz V ).

d. Adjust A8R71 (ZERO ADJ) until the reading on the 3465A is 0V ±2mV.

(3) Gain Adjustment

a. Set the 4192A's SPOT BIAS to -10V ( Blue SPOT EBEQ/BIAS 0 - 1 0 ENTER MHz V ). Leave the high lead connected to A8TP6.

b. Adjust A8R54 (GAIN ADJ) until the reading on the 3465A is -10V ±20mV.

(4) Full Scale Check

a. Set the 4192A's SPOT BIAS to +35V ( Blue SPOT EBEQ/BIAS 0 3 5 ENTER MHz V ). Leave the high lead connected to A8TP6.

b. Check that the reading on the 3465A is +35.0V ±0.1V.

c. Set the 4192A's SPOT BIAS to -35V ( Blue SPOT EBEQ/BIAS 0 - 3 5 ENTER MHz V ).

d. Check that the reading on the 3465A is -35.0V ±0.1V.

## 5-21. A3 40MHz VCXO ADJUSTMENT/40MHz–IF VCO ADJUSTMENT

5-22. This adjustment is divided into two parts: (1) 40MHz VCXO Adjustment and (2) 40MHz–IF VCO Adjustment.

### PURPOSE:

This adjustment sets the frequency of the 40MHz VCXO to an accurate 40MHz.

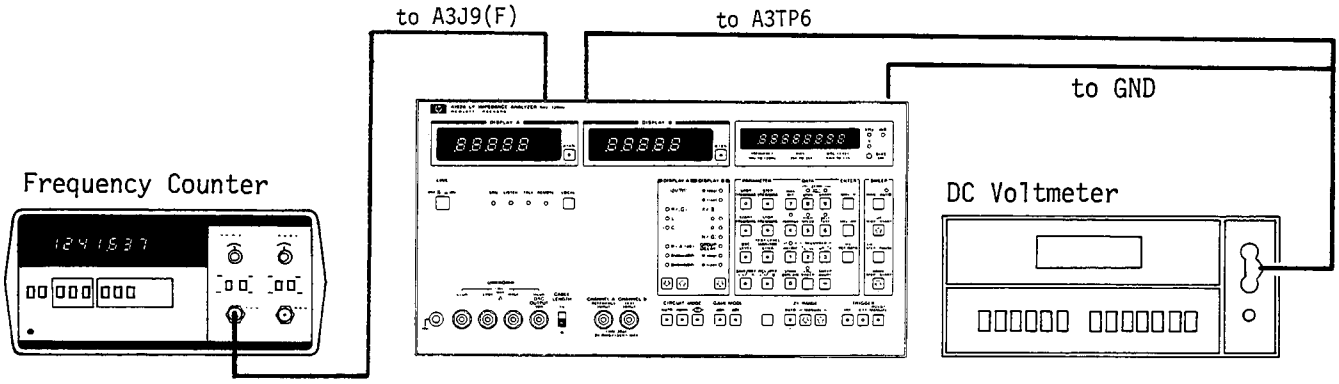


**Figure 5-3. A3 40MHz VCXO Adjustment/40MHz–IF VCO Adjustment Setup.**

### EQUIPMENT:

| | |
|---|---|
| Frequency Counter | HP5314A |
| DC Voltmeter | HP3465A |
| BNC-to-SMB Cable | |
| Dual Banana Plug-to-Alligator Clip Cable | HP11002A |

**PROCEDURE:**

(1) 40MHz VCXO Adjustment

a. Disconnect the SMB cable from A3J9 (F).

b. Connect A3J9 (F) to the input terminal of the 5314A with the BNC-to-SMB cable as shown in Figure 5-3.

c. Set the 5314A to measure a 40MHz signal with 10Hz resolution.

d. Adjust A3R49 (40M ADJ) until the reading on the 5314A is 40MHz ±100Hz.

e. Disconnect the BNC-to-SMB cable from A3J9 and reconnect the original SMB cable.

(2) 40MHz-IF VCO Adjustment

*Note: This adjustment is necessary only when a component that affects the VCO output frequency has been replaced.*

a. Remove the A3 board assembly, then remove the top and bottom shield covers that house the 40MHz-IF VCO.

b. Remove the permalloy shield from A3L12.

c. Connect the dual banana plug-to-alligator clip cable to the 3465A.

d. Set the 3465A's controls as follows:

| | |
|---|---|
| FUNCTION | ⎓ V |
| RANGE | AUTO |
| Other Controls | Any setting |

e. Connect the high lead to A3TP6 (VCO CTL) and the low lead to the chassis as shown in Figure 5-3.

f. Adjust A3L12 until the reading on the 3465A is 0V ±100mV.

g. Replace the permalloy shield and check that the voltage measured in step f is still within limits.

## 5-23. A4 API ADJUSTMENT

5-24. **PURPOSE:** To obtain appropriate API (Analog Phase Interpolator) output.

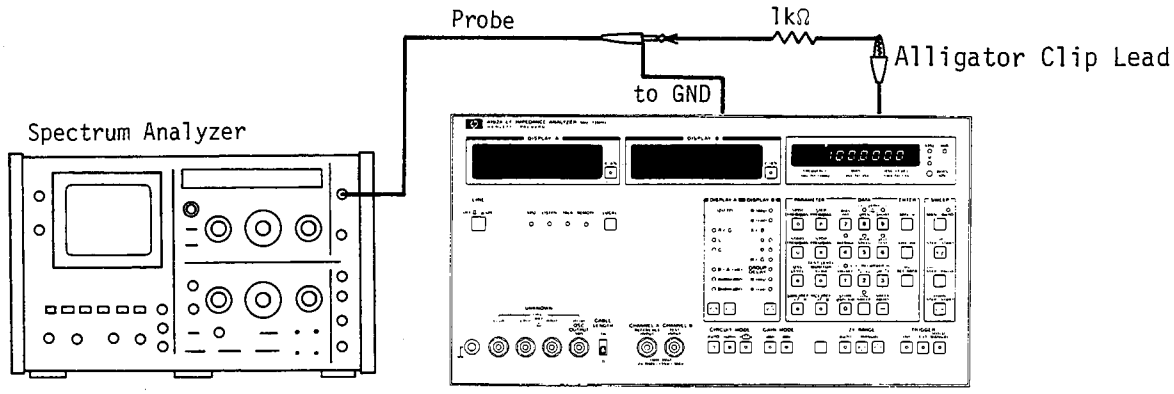


**Figure 5-4. A4 API Adjustment Setup.**

### EQUIPMENT:

Spectrum Analyzer
- Display Section ..... HP141T
- LF Section ..... HP8556A
- IF Section ..... HP8552B

1 : 1 Probe ..... HP10007B
Resistor ..... 1kΩ 1/8W
Alligator Clip-to-Alligator Clip Lead

### PROCEDURE:

a. Connect the high input of the Spectrum Analyzer to A4TP1 through the 1 kΩ resistor and connect the low input to the chassis as shown in Figure 5-4.

b. Press the [Blue], [SELF TEST 6], and [5] keys (SELF TEST 5) on the 4192A.

c. Set the Spectrum Analyzer's controls as follows:

8556A LF Section –

| | |
|---|---|
| RANGE | 0 – 30kHz |
| INPUT | dBV |
| CENTER FREQUENCY | 5kHz |
| BANDWIDTH | 100Hz |
| SCANWIDTH | 1kHz/DIV |
| INPUT LEVEL | -40dBV |

8552B IF Section –

| | |
|---|---|
| SCAN TIME | 0.1 sec/DIV |
| LOG REF LEVEL | -40dBV LOG |
| VIDEO FILTER | 10kHz |
| SCAN MODE | INT |
| SCAN TRIGGER | AUTO |

d. Set the 4192A's SPOT FREQ. to 3kHz.

e. Adjust A4R79 (VR1) to minimize three peads as shown in Figure 5-5.

f. Change the 4192A's SPOT FREQ. to 300Hz. Do not change the Spectrum Analyzer's control settings.

g. Adjust A4R80 (VR2) to minimize three peaks.

h. Change the 4192A's SPOT FREQ. to 3Hz. Do not change the Spectrum Analyzer's control settings.

i. Adjust A4R83 (VR4) to minimize three peaks.

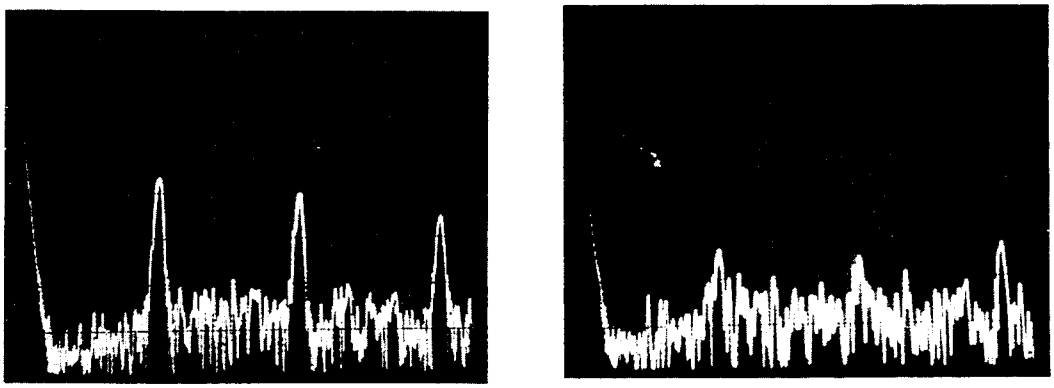

(a) poorly adjusted (b) well adjusted

**Figure 5-5. Waveforms at A4 TP1 (1kHz/div., REF: -40dBV LOG).**

## 5-25. A4 S/H 100kHz SPURIOUS ADJUSTMENT

5-26. **PURPOSE:** This adjustment minimizes the 100kHz switching noise generated by the S/H (Sample and Hold) Section.

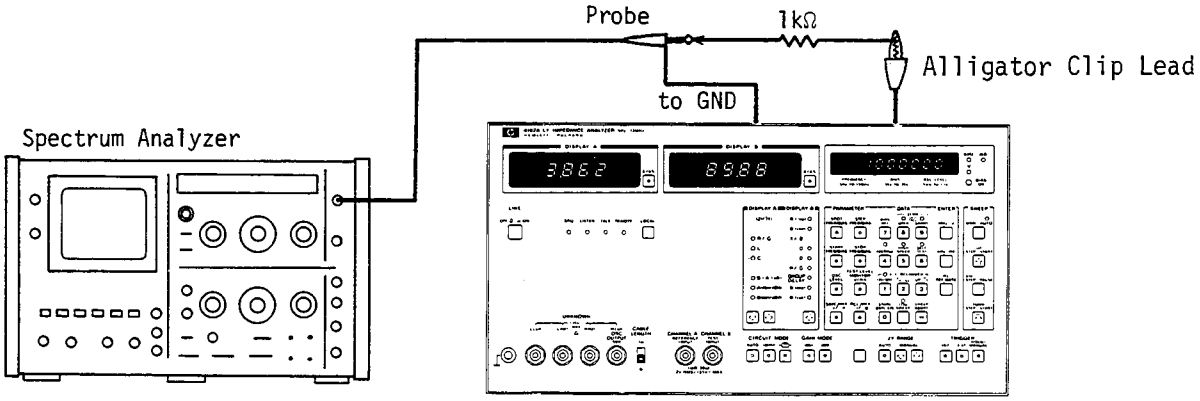


**Figure 5-6. A4 S/H 100kHz Spurious Adjustment Setup.**

**EQUIPMENT:**

Spectrum Analyzer
- Display Section ..... HP141T
- LF Section ..... HP8556A
- IF Section ..... HP8552B

1 : 1 Probe ..... HP10007B
Resistor ..... 1kΩ 1/8W
Alligator Clip-to-Alligator Clip Lead

**PROCEDURE:**

a. Connect the input of the Spectrum Analyzer to A4TP1 through the 1kΩ resistor as shown in Figure 5-6.

b. Set the 4192A to its Initial Control Settings.

c. Set the Spectrum Analyzer's controls as follows:

8556A LF Section –

| | |
|---|---|
| RANGE | 0 – 300kHz |
| INPUT | dBV |
| CENTER FREQUENCY | 120kHz |
| BANDWIDTH | 3kHz |
| SCANWIDTH | 20kHz/DIV. |
| INPUT LEVEL | -50dBV |

8552B IF Section –

| | |
|---|---|
| SCAN TIME | 5msec/DIV. |
| LOG REF LEVEL | -10dBV LOG |
| VIDEO FILTER | OFF |
| SCAN MODE | INT |
| SCAN TRIGGER | AUTO |

d. Adjust A4R31 (VR5) until the peak of the 100kHz and 200kHz spurious, shown in Figure 5-7 (a), are minimized as shown in Figure 5-7 (b).

(a) poorly adjusted (b) well adjusted

**Figure 5-7. Waveforms at A4TP1 (20kHz/div., REF: -10dBV LOG).**

## 5-27. A12 OSC LEVEL ADJUSTMENT

**5-28. PURPOSE:** This adjustment precisely sets the output level of the Test Signal Oscillator.

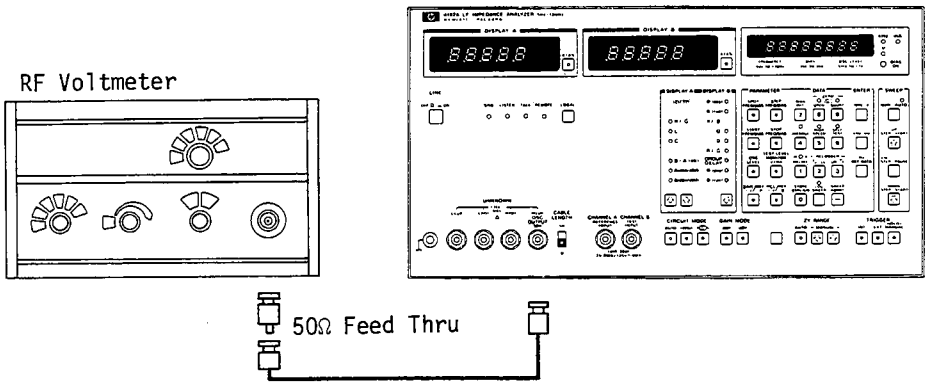


**Figure 5-8. A12 OSC Level Adjustment Setup.**

### EQUIPMENT:

| | |
|---|---|
| RF Voltmeter | HP3403C W/OPT 001 |
| BNC-to-BNC Cable | PN 8120-1838 |
| 50Ω Feedtrough Termination | PN 04192-61002 |

### PROCEDURE:

a. Set the 4192A's controls as follows:

| | |
|---|---|
| DISPLAY A | B-A (dB) |
| Other Controls | Initial Settings |

b. Set the 3403C's controls as follows:

| | |
|---|---|
| FUNCTION | AC |
| RANGE | AUTO |

c. Connect the 50Ω termination to the OSC OUTPUT 50Ω connector on the 4192A; connect the INPUT of the 3403C to the 50Ω termination using the BNC-to-BNC cable as shown in Figure 5-8.

d. Adust A12R34 (1V ADJ) until the reading on the 3403C is 1V ±5mV.

e. Set the 4192A's OSC LEVEL to 105mV.

f. Adjust A12R28 (105mV ADJ) until the reading on the 3403C is 105mV ±5mV.

g. Set the OSC LEVEL to 1V and repeat steps d thru f.

## 5-29. A11 INPUT CHANNEL ISOLATION CHECK

**5-30. PURPOSE:** This test checks that CHANNEL A and CHANNEL B are properly isolated. There are no adjustable components.

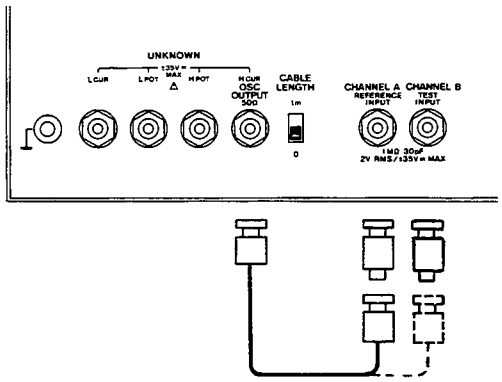


**Figure 5-9. A11 Input Channel Isolation Check Setup.**

*Note: Connect a 50Ω feedthrough to each channel (CHANNEL A and CHANNEL B).*

### EQUIPMENT:

| | |
|---|---|
| 50Ω Feedthrough Termination | PN 04192-61002 |
| BNC-to-BNC Cable | PN 8120-1838 |

### PROCEDURE:

a. Set the 4192A's controls as follows:

| | |
|---|---|
| DISPLAY A | B (dBm/dBV) |
| GAIN MODE | dBm |
| Other Controls | Initial Settings |

b. Connect the two 50Ω terminations to CHANNEL A and CHANNEL B.

c. Connect the OSC OUT ($H_{CUR}$) terminal to the 50Ω termination on CHANNEL A using the BNC-to-BNC cable as shown in Figure 5-9 .

d. Check that the reading on DISPLAY A is less than −80dB. The displayed value will fluctuate slightly.

e. Disconnect the cable from CHANNEL A and connect it to the termination on CHANNEL B as shown in Figure 5-9.

f. Set the 4192A's DISPLAY A to A (dBm/dBV).

g. Repeat step d.

## 5-31. A11 INPUT CHANNEL TRACKING ADJUSTMENT

**5-32. PURPOSE:** To obtain the correct amplitude and phase relation between CHANNEL A and CHANNEL B.

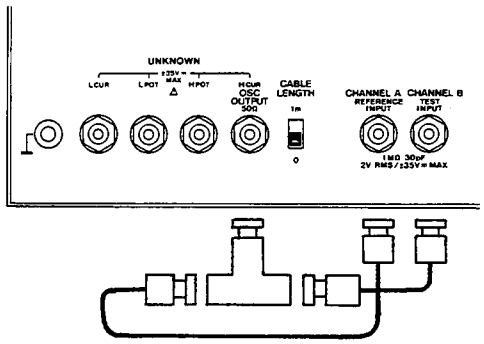


**Figure 5-10. A11 Input Channel Tracking Adjustment Setup.**

**EQUIPMENT:**

BNC-to-BNC Cable ..... PN 8120-1838, 2ea.*
BNC Tee Adapter ..... HP P/N 1250-0781

*Both cables must be of the same length.

**PROCEDURE:**

a. Connect the BNC-to-BNC cables and BNC Tee Adapter as shown in Figure 5-10.

b. Press the [Blue], [6] (SELF TEST), and [1] keys (SELF TEST 1). DISPLAY A and DISPLAY B will indicate nearly 100.00 and 0.00, respectively.

c. Adjust A11R67 (MF TRACKING) until the reading on DISPLAY A is 100.00 ±1 count. DISPLAY B should be 0.00 ±2 counts. If not, adjust A11C32 (HF$\phi$).

d. Set the 4192A's SPOT FREQ. to 5Hz.

e. Adjust A11R119 (LF TRACKING) until the reading on DISPLAY B is 0.00 ±3 counts. DISPLAY A should be 100.00 ±35 counts. If not, adjust A11R119 again – keeping DISPLAY B at 0.00 ±3 count – until DISPLAY A is 100.00 ±35 counts.

f. Set the 4192A's SPOT FREQ. to 10MHz.

g. Adjust A11C52 (HF MAG TRACKING) and A11C32(HF $\phi$) until the readings on DISPLAY A and DISPLAY B are 100.00 ± 10 counts and 0.00 ± 10 counts, respectively.

## 5-33. A11 IF ATTENUATOR ADJUSTMENT

**5-34. PURPOSE:** To obtain accurate 1/10, 1/100, and 1/1000 attenuation.

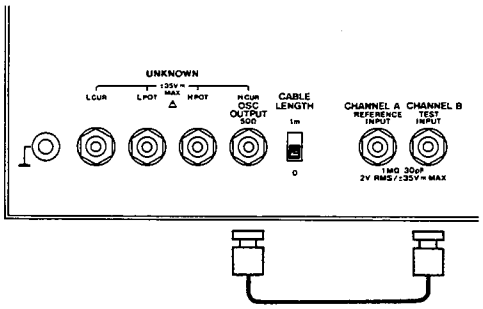


**Figure 5-11. A11 IF Attenuator Adjustment Setup.**

**EQUIPMENT:**

BNC-to-BNC Cable ..... PN 8120-1838

**PROCEDURE:**

a. Connect OSC OUT ($H_{CUR}$) to CHANNEL B using the BNC-to-BNC cable as shown in Figure 5-11.

b. Press the [Blue], [SELF TEST 6], and [2] keys (SELF TEST 2).

c. Adjust A11R100 (ATT 1 MAG) and A11C71 (ATT 1 $\phi$) until the readings on DISPLAY A and DISPLAY B are 100.00 ±2 counts and 0.00 ±2 counts, respectively.

d. Release the SELF TEST 2 function. Press the [Blue], [SELF TEST 6], and [3] keys (SELF TEST 3).

e. Adjust A11R105 (ATT 2 MAG) and A11C74 (ATT 2 $\phi$) until the readings on DISPLAY A and DISPLAY B are 100.00 ±2 counts and 0.00 ±2 counts, respectively.

f. Release the SELF TEST 3 function. Press the [Blue], [SELF TEST 6], and [4] keys (SELF TEST 4).

g. Adjust A11R81 (ATT 3 MAG) and A11C64 (ATT 3 $\phi$) until the readings on DISPLAY A and DISPLAY B are 100.00 ±2 counts and 0.00 ±2 counts, respectively.

## 5-35. A11 IF AMPLIFIER ADJUSTMENT

**5-36. PURPOSE:** To adjust the gain of the IF amplifier.

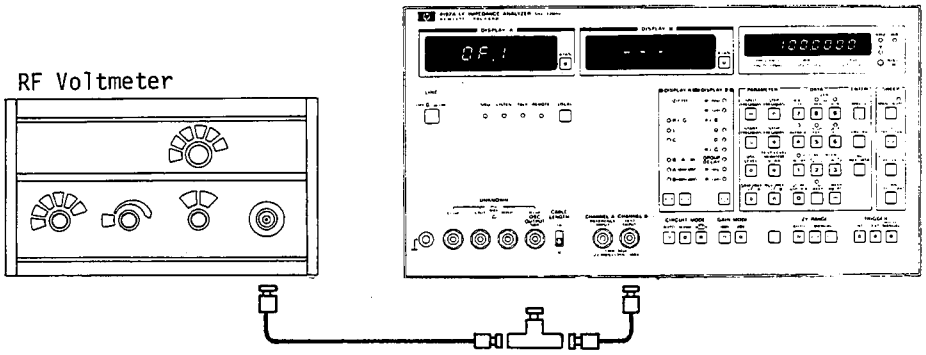


**Figure 5-12. A11 IF Amplifier Adjustmtne Setup.**

**EQUIPMENT:**

| | |
|---|---|
| RF Voltmeter | HP3403C W/OPT 001 |
| BNC-to-BNC Cable | PN 8120-1838, 2ea |
| BNC Tee Adapter | HP P/N: 1250-0781 |

**PROCEDURE:**

a. Connect the 3403C to the 4192A as shown in Figure 5-12.

b. Set the 3403C's controls as follows:

| | |
|---|---|
| FUNCTION | AC |
| RANGE | AUTO |

c. Press the [Blue], [SELF TEST 6], and [1] keys (SELF TEST 1) on the 4192A. OF-1 will be displayed on DISPLAY A.

d. Press the TEST LEVEL MONITOR key. DISPLAY C will indicate approximately 1V.

e. Adjust A11R45 (IF 1 GAIN) until the reading on DISPLAY C is ±1 count of the reading on the 3403C.

f. Set the 4192A's SPOT FREQ. to 78kHz.

g. Press the TEST LEVEL MONITOR key.

h. Adjust A11R46 (IF 2 GAIN) until the reading on DISPLAY C is ±1 count of the reading on the 3403C.

i. Set the 4192A's SPOT FREQ. to 100kHz and set the OSC LEVEL to the levels listed in the table below.

j. For each OSC LEVEL setting, check that the reading on DISPLAY C – when compared to the reading on the 3403C – is within the test limits given in the table.

| OSC LEVEL | Test Limits |
|---|---|
| 500mV | ±10 counts |
| 300mV | ± 6 counts |
| 200mV | ± 4 counts |
| 100mV | ± 1 counts |

## 5-37. A1 NULL DTECTOR DC OFFSET ADJUSTMENT

**5-38. PURPOSE:** To provide correct DC offset for the 0° and 90° Phase Detectors in the Null Detector.

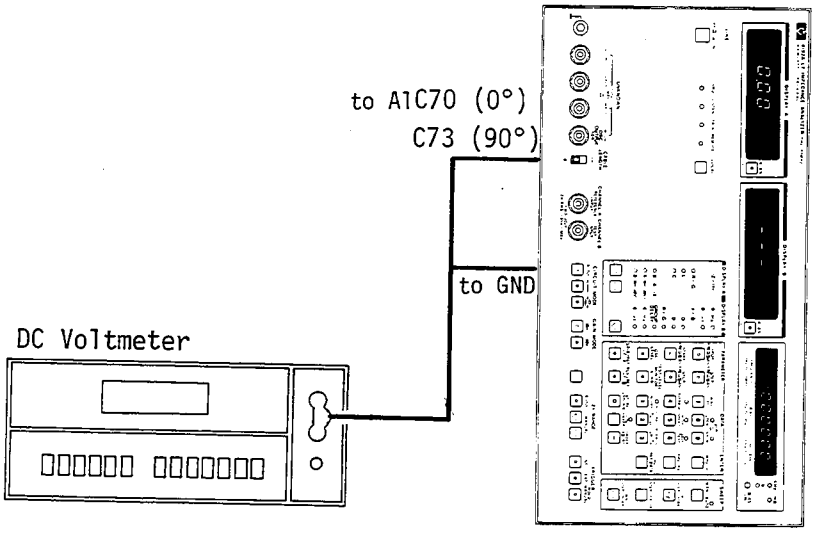


**Figure 5-13. A1 Null Detector DC Offset Adjustment Setup.**

### EQUIPMENT:

| | |
|---|---|
| DC Voltmeter | HP3465A |
| Dual Banana Plug-to-Alligator Clip Cable | HP11002A |

### PROCEDURE:

a. Set the 4192A's controls as follows:

| | |
|---|---|
| ZY RANGE | 100Ω Full Scale |
| Other Controls | Initial Settings |

b. Set A1J10 and J11 to "T" (TEST).

c. Set the 3455A's controls as follows:

| | |
|---|---|
| FUNCTION | ⎓ V |
| RANGE | AUTO |
| Other Controls | Any setting |

d. Connect the dual banana plug-to-alligator clip cable to the 3465A; connect the high lead to the one lead (0°) of A1C70 and the low lead to the chassis as shown in Figure 5-13.

e. Adjust A1R101 until the reading on the 3465A is 0V ±1mV.

f. Connect the high lead to the one lead (90°) of A1C73.

g. Adjust A1R104 until the reading on the 3465A is 0V ±1mV.

h. Replace A1J10 and J11 to NORMAL.

## 5-39. A1 $L_{CUR}$ AMPLIFIER OUTPUT LEVEL ADJUSTMENT

**5-40. PURPOSE:** To adjust the gain of the $L_{CUR}$ Power Amplifier.

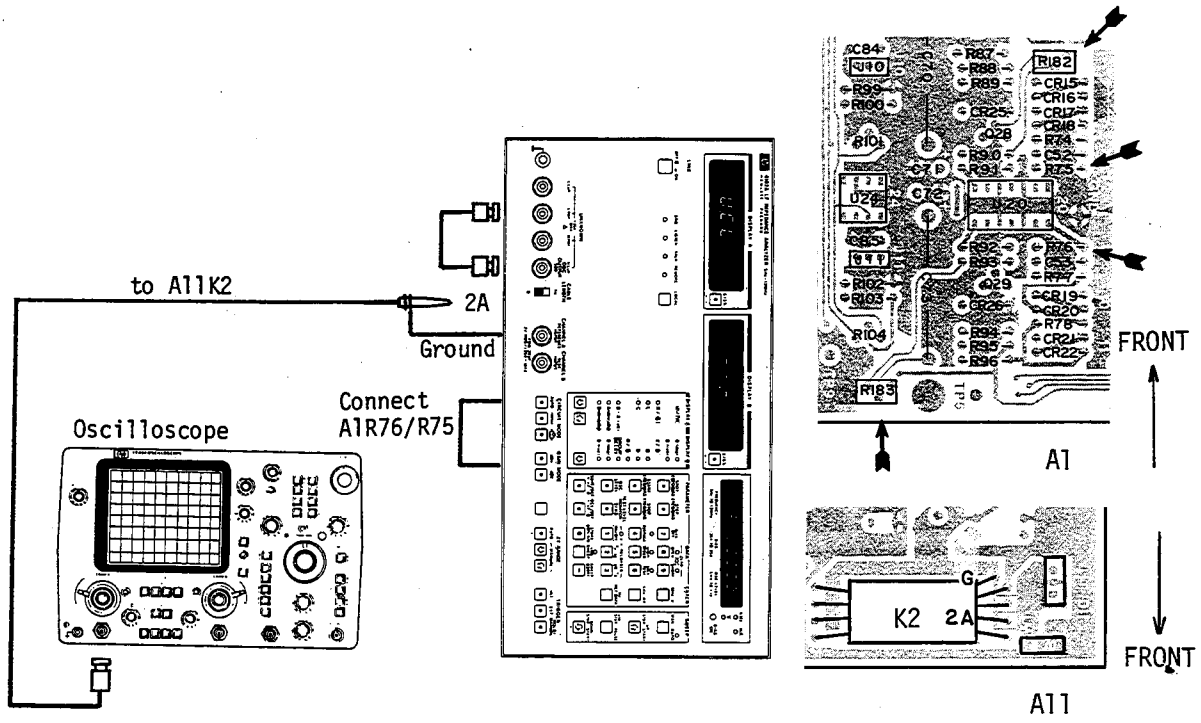


**Fig. 5-14 A1 $L_{CUR}$ Amplifier Output Level Adjustment Setup.**

**EQUIPMENT:**

| | |
|---|---|
| Oscilloscope | HP1740A |
| Probe 10 : 1 | HP10006D |
| BNC-to-BNC Cable | PN 8120-1838 |
| Alligator Clip-to-Alligator Clip Lead | |

**PROCEDURE:**

a. Set the 4192A's controls as follows:

| | |
|---|---|
| SPOT FREQ. | 100kHz |
| OSC LEVEL | 70mV |
| Other Controls | Initial Settings |

b. Connect the $L_{POT}$ terminal to the $H_{CUR}$ terminal using the BNC-to-BNC cable, and connect the oscilloscope high input to pin 2A of A11K2 and low lead to the ground (G) pin as shown in Figure 5-14.

c. Set 1740A's controls as follows:

| | |
|---|---|
| VOLTS/DIV | .1 |
| TIME/DIV | .05 μsec |
| TRIGGER | INT |
| SWEEP MODE | AUTO |

d. Connect the Alligator Clip lead across (short) A1R76.

e. Adjust A1R182 until the amplitude of the waveform displayed on the 1740A is 4.0 ± 0.3 volts (div) peak-to-peak.

f. Reverse the setting of bit 4 (MSB) of A1S1 and confirm that the waveform is 2.8 to 5.6 volts p-p. If the waveform is less than 4.0 volts p-p and greater than 2.8 volts p-p, adjust A1R82 to maximize the waveform to 4.0 volts p-p. Do not reset bit 4 of A1S1.

Note

If the waveform is not between 2.8 and 5.6 volts p-p, change A12CR4, CR5, CR6, and CR7.

g. Disconnect the Alligator Clip lead and connect it across (short) A1R75.

h. Adjust A1R183 until the waveform displayed on the 1740A is 4.0 ± 0.3 volts p-p.

i. Reset bit 4 of A1S1 to its previous position and confirm that the waveform is 2.8 to 5.6 volts p-p. If the waveform is less than 4.0 volts p-p and greater than 2.8 volts p-p, adjust A1R183 to maximize the waveform to 4.0 volts p-p.

Note

If the waveform is not between 2.8 and 5.6 volts p-p, change A12CR8, CR9, CR10, and CR11.

## 5-41. A1 $L_{CUR}$ AMPLIFIER PHASE ADJUSTMENT

**5-42. PURPOSE:** To minimize the residual phase offset that occurs at high frequency.

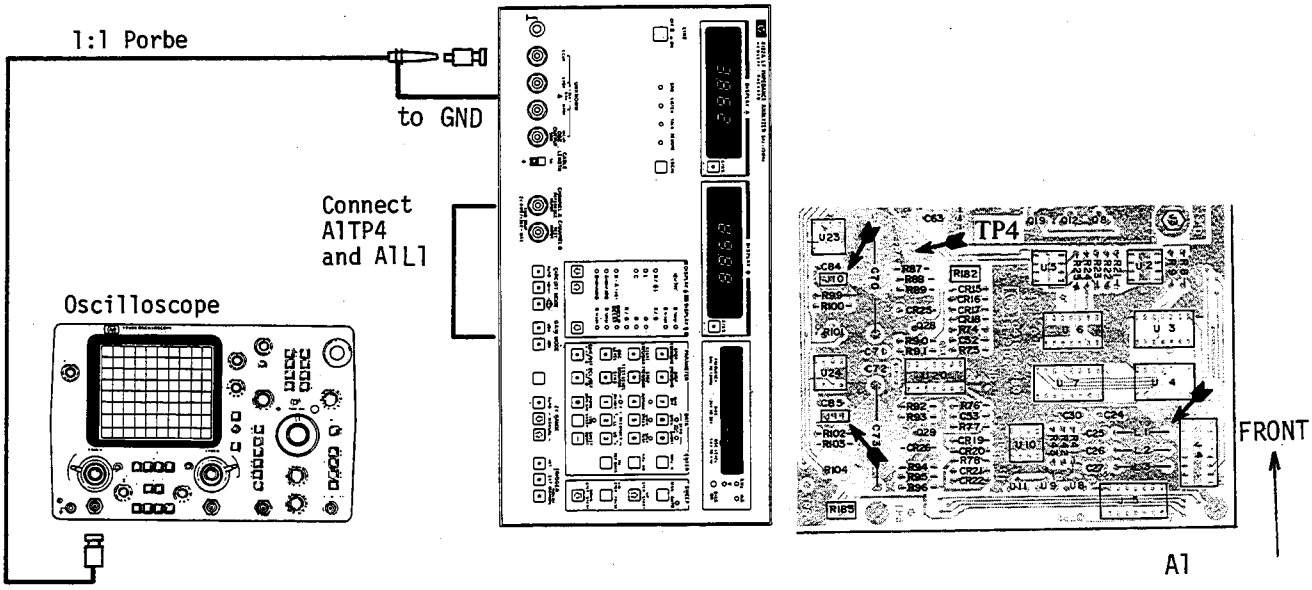


**Figure 5-15. A1 $L_{CUR}$ Amplifier Phase Adjustment Setup.**

**EQUIPMENT:**

| | |
|---|---|
| Oscilloscope | HP1740A |
| Probe 1 : 1 | HP10007B |
| 50Ω Feedtrough Termination | PN 04192-61002 |
| Alligator Clip-to-Alligator Clip Lead | |

**PROCEDURE:**

a. Set the 4192A's controls as follows:

| | |
|---|---|
| SPOT FREQ. | 10MHz |
| ZY RANGE | 100kΩ |
| Other Controls | Initial Settings |

b. Set A1J10 and J11 to "T" (TEST).

c. Connect the alligator clip lead between A1TP4 and either lead of A1L1.

d. Connect the 50Ω termination to the $L_{CUR}$ terminal on the 4192A and connect oscilloscope input to the outer conductor of the 50Ω termination as shown in Figure 5-15.

e. Set the 1740A's controls as follows:

| | |
|---|---|
| VOLTS/DIV | .005 |
| TIME/DIV | .1μ sec |
| TRIGGER | INT |
| SWEEP MODE | Auto |

f. Adjust A1C5 to minimize the amplitude of the 10MHz signal as shown in Figure 5-16.

g. Replace A1J10 and J11 to NORMAL.

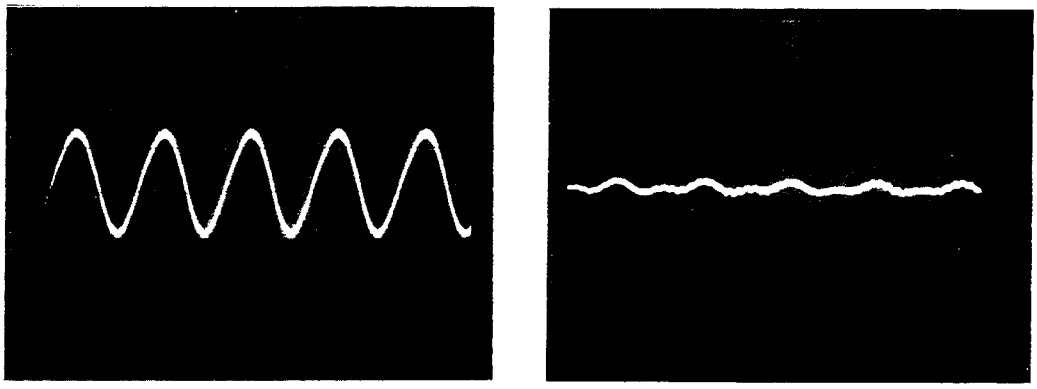

(a) poorly adjusted (b) well adjusted

**Figure 5-16. Waveforms at Outer Conductor of Feedthrough Termination (0.1μsec/div., 0.005 volt/div)**

## 5-43. A1 PHASE TRACKING ADJUSTMENT

5-44. **PURPOSE:** To adjust the phase difference between the 0° and 90° phase detectors to 90°.

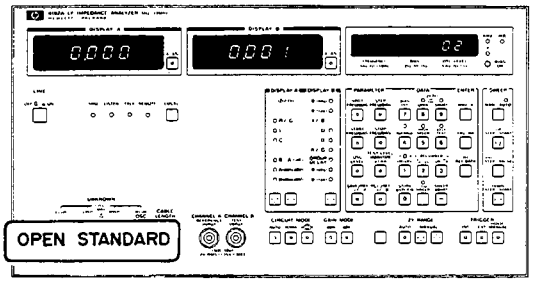


**Figure 5-17. A1 Phase Tracking Adjustment Setup.**

*Note: This adjustment must be performed only when the A1 or A12 board has been repaired.*

**EQUIPMENT:**

SHORT Standard
OPEN Standard ..... HP16074A

**PROCEDURE:**

a. Directly connect the OPEN Standard to the UNKNOWN terminals of the 4192A as shown in Figure 5-17.

b. Set all bit switches on A1S1 (Phase Tracking Adjust Switch) to ON.

c. Press the [Blue], [SELF TEST 6], and [6] keys (SELF TEST 6).

d. Set the 4192A's controls as follows:

CIRCUIT MODE ..... AUTO
ZY RANGE ..... AUTO

e. Repeatedly press the TRIGGER HOLD/MANUAL key. The value on DISPLAY C will increase by 1 each time the key is pressed. The count sequence is 01, 02, . . . 14, 15, 00, 01, . . . .

f. Observe DISPLAY A and DISPLAY B each time the TRIGGER HOLD/MANUAL key is pressed. Each time the values on both DISPLAY A and DISPLAY B are 0 ± 2 counts, make a note of the number displayed on DISPLAY C.

g. Set A1S1 to the middle number of the numbers noted in step f. For example, if the numbers noted in step f were 03, 04, and 05, A1S1 should be set to 04 (0100); if the numbers noted in step f were 15, 00, 01, and 02, A1S1 should be set to 00, the lower of the two middle numbers. A special case arises when 15 and 00 are the middle numbers. In this case, set A1S1 to 15.

*Note: Bit switches on A1S1 are labeled, on the switch, 1 through 4. Bit 4 is the MSB (Most Significant Bit). This means that to represent 01, A1S1 must be set to 1000; to represent 02, 0100.*

**[Phase Tracking Adjustment Confirmation Check]**

The following procedure can be used to verify that the Phase Tracking is properly set.

a. Release the SELF TEST 6 function.
Leave the OPEN Standard connected to the UNKNOWN terminals.

b. Set the 4192A's DISPLAY A to R/G.

c. Check that the readings on both DISPLAY A and DISPLAY B are within 0 ±0.002μS.

d. Add 1 to the number set on A1S1 in step g of the adjustment procedure; set A1S1 to this number. For example, if it was set to 13 (1101) in step g of the adjustment procedure, set it to 14 (1110); if it was set to 15 (1111), set it to 0 (0000).

e. Set ZY RANGE to 1mS (in step i, 100Ω) full scale, and check that the readings are stable.

f. Set ZY RANGE to 10mS (in step i, 1kΩ) full scale, and check that the readings are stable.

g. Press ZY RANGE [AUTO], and check that the readings are stable.

h. Change the SPOT FREQ. to 5Hz and 13MHz, and repeat steps e thru g.

i. Connect the SHORT Standard to the UNKNOWN terminals and repeat steps e thru h.

j. Disconnect the SHORT Standard, and connect the OPEN Standard.

k. Subtract 2 from the number set on A1S1 in step d of this confirmation check. Set A1S1 to this number. For example, if A1S1 was set to 14 (1110) in step d, set it to 12 (1100); if it was set to 0 (0000), set it to 14 (1110).

l. Repeat steps e through i.

*Note: If readings are not stable in any step, try to adjust to set the middle number again.*

m. Reset A1S1 to the number used in step g of the adjustment procedure (on page 5-24).

## 5-45. A1 10MHz PHASE ADJUSTMENT

## 5-46. PURPOSE:

To provide high frequency compensation for the Range Resistors.

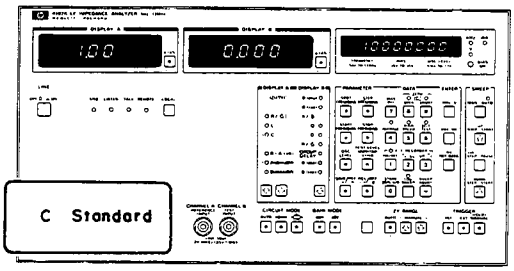


Phase Adjustment

**Figure 5-18. 10MHz Phase Adjustment Setups**

## EQUIPMENT:

1pF Capacitance Standard ..... HP16381A
10pF Capacitance Standard ..... HP16382A

**PROCEDURE:**

a. Set the 4192A's controls as follows:

| | |
|---|---|
| DISPLAY A | C |
| DISPLAY B | D |
| SPOT FREQ. | 10MHz |
| Other Controls | Initial Settings |

b. Directly connect the 1pF C standard to the UNKNOWN terminals of the 4192A as shown in Figure 5-18 (a).

c. Adjust A1C20$\phi$ ADJ (10 KΩ) until the D value displayed on DISPLAY B is 0 ± 10 counts.

d. Remove the 1pF C standard and connect the 10pF C standard in its place.

e. Adjust A1C22$\phi$ ADJ (1 KΩ) until the D value displayed on DISPLAY B is 0 ± 10 counts.

*Note: If the correct DISPLAY B values cannot be obtained, reperform the A11 Input Channel Tracking Adjustment (paragraph 5-31) and try this adjustment again.*

## 5-47. A9 ANALOG RECORDER OUTPUT CHECK AND ADJUSTMENT

**5-48.** This check and adjustment is divided into four parts: (1) +2V D-A Converter Reference Voltage Adjustment, (2) 0V Reference Voltage Check, (3) +1V Analog Output Adjustment, and (4) -1V Check.

### PURPOSE:

To accurately adjust the D-A Converter Reference Voltage and Analog Output Voltage to +2V and +1V, respectively.

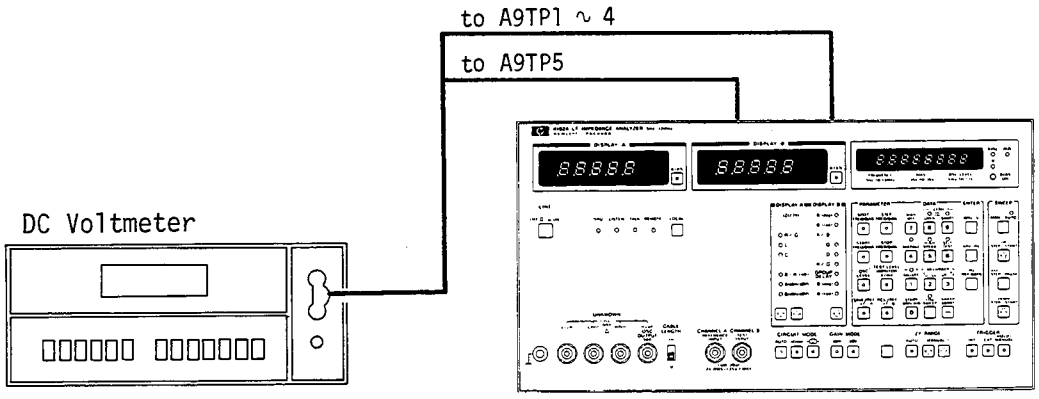


**Figure 5-19. A9 Analog Recorder Output Check and Adjustment Setup.**

### EQUIPMENT:

DC Voltmeter ..... HP3465A
Dual Banana Plug-to-Alligator Clip Cable ..... HP11002A

### PROCEDURE:

(1) +2V D-A Converter Reference Voltage Adjustment

a. Connect the high input of the 3465A to A9TP1 and the low input to A9TP5 as shown in Figure 5-19.

b. Set the 3465A's controls as follows:

FUNCTION ..... ⎓V
RANGE ..... AUTO
Other Controls ..... Any setting

c. Press the [Blue] and [2] keys on the 4192A.

d. Adjust A9R6 (+2V ADJ) until the reading on the 3465A is +2V ±10mV.

(2) 0V Reference Voltage Check

Successively connect the high lead to A9TP2, TP4, and TP3 and note the measured values as $V_A$, $V_B$, and $V_C$, respectively.

(3) +1V Analog Output Adjustment

a. Press the [Blue] and [3] keys on the 4192A.

b. Connect the high lead to A9TP2 and adjust A9R5 (DISP A ADJ) until the reading on the 3465A is equal to $V_A$ + 1V ±1mV.

c. Connect the high lead to A9TP4 and adjust A9R24 (DISP B ADJ) until the reading on the 3465A is equal to $V_B$ + 1V ±1mV.

d. Connect the high lead to A9TP3 and adjust A9R25 (DISP C ADJ) until the reading on the 3465A is equal to $V_C$ + 1V ±1mV.

(4) -1V Check

a. Press the [Blue], [SELF TEST 6] and [7] keys (SELF TEST 7) on the 4192A.

b. Connect the high lead to A9TP2 and check that the voltage is equal to $V_A$ - 1V ±2mV.

c. Connect the high lead to A9TP4 and check that the voltage is equal to $V_B$ - 1V ±2mV.

**[Analog Recorder Output Confirmation Check]**

The following procedure can be used to verify that the Analog Recorder Output is functioning properly.

a. Release the SELF TEST 7 function. Connect the DISPLAY A and FREQ/BIAS Recorder Outputs, located on the rear panel of the 4192A, to the X and Y inputs of the X-Y Recorder.

b. Place paper on the platen of the X-Y Recorder.

c. Press the [Blue] and [UR 3] keys on the 4192A and adjust the recorder controls to position the pen to the upper-right.

d. Press the [Blue] and [LL 2] keys on the 4192A and adjust the recorder controls to position the pen to the lower-center.

e. Press the [Blue], [SELF TEST 6], and [8] keys (SELF TEST 8) on the 4192A; the Test Pattern shown below will be drawn on the X-Y Recorder.

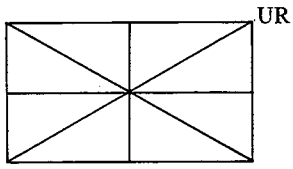


TEST PATTERN

**Table 5-4. Manual Operating Self-Test Item**

| Key setting | Item | Para | Adjustable component |
|---|---|---|---|
| Blue SELF TEST 6 1 (SELF TEST 1) | A11 IF AMPLIFIER ADJUSTMENT | 5-35 | A11R45<br>R46 |
| | A11 INPUT CHANNEL TRACKING ADJUSTMENT | 5-31 | A11R67<br>R119<br>C32<br>C52 |
| Blue SELF TEST 6 2 (SELF TEST 2) | A11 IF ATTENUATOR ADJUSTMENT | 5-33 | A11R100<br>C71 |
| Blue SELF TEST 6 3 (SELF TEST 3) | | 5-33 | A11R105<br>C74 |
| Blue SELF TEST 6 4 (SELF TEST 4) | | 5-33 | A11R81<br>C64 |
| Blue SELF TEST 6 5 (SELF TEST 5) | A4 API ADJUSTMENT | 5-23 | A4R79<br>R80<br>R83 |
| Blue SELF TEST 6 6 (SELF TEST 6) | A1 PHASE TRACKING ADJUSTMENT | 5-43 | A1 S1 |
| Blue SELF TEST 6 7 (SELF TEST 7) | A9 ANALOG RECORDER OUTPUT CHECK AND ADJUSTMENT | 5-47 | None |
| Blue SELF TEST 6 8 (SELF TEST 8) | | 5-47 | None |

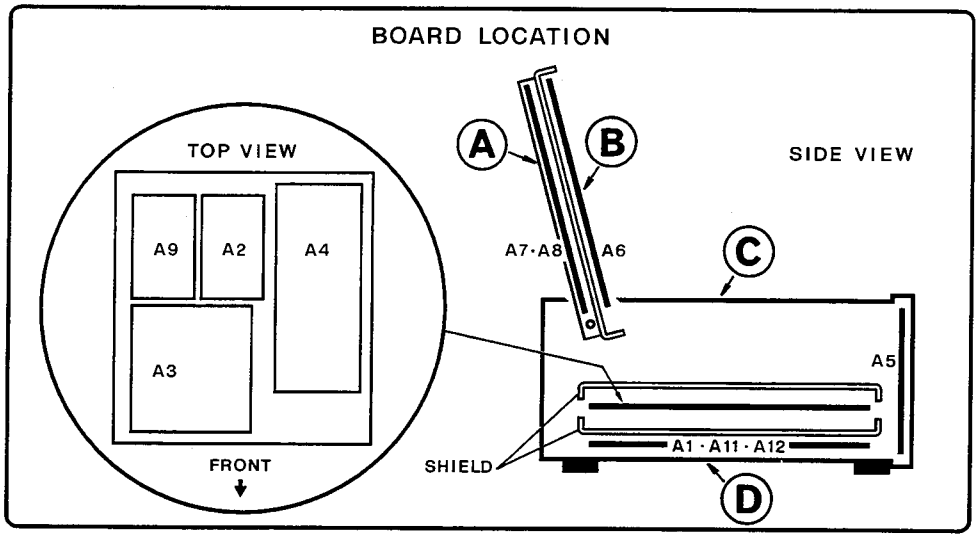


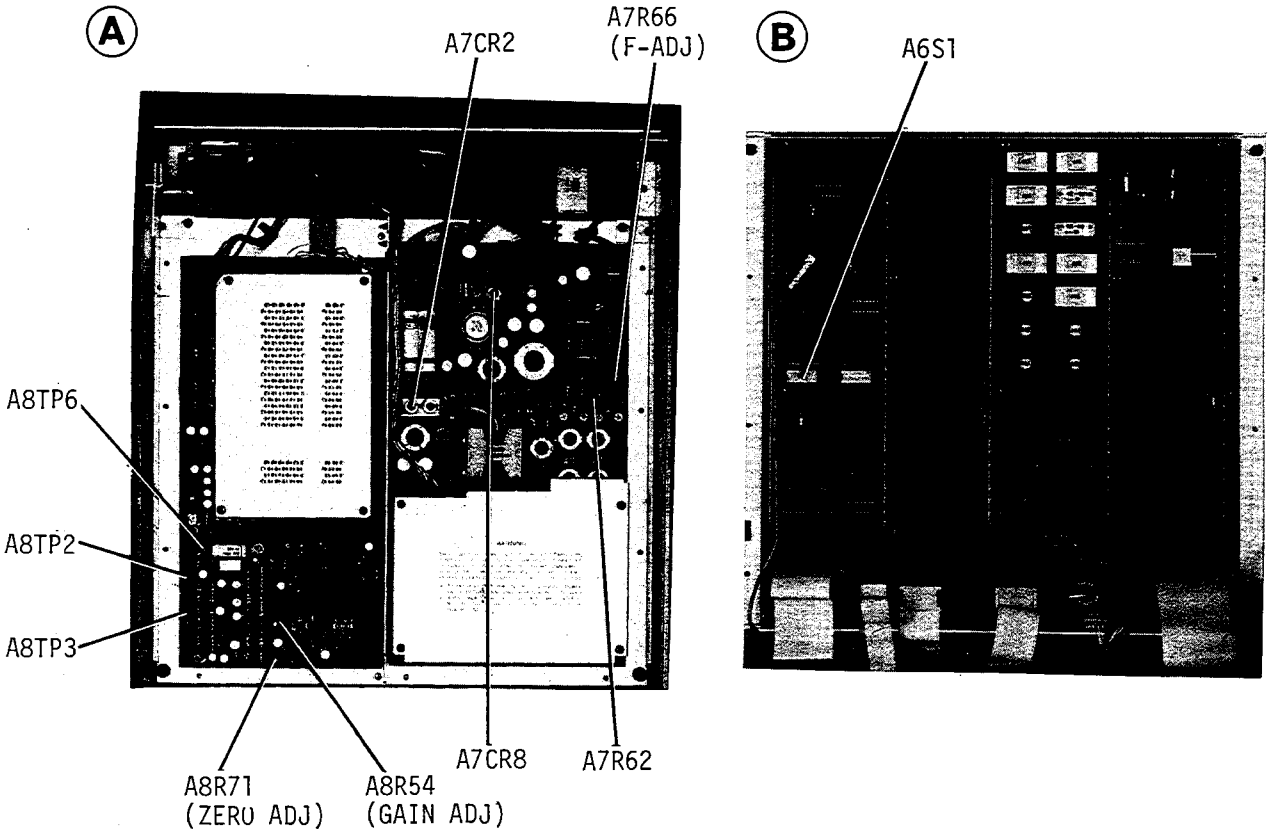


Figure 5-20. Adjustment Locations.

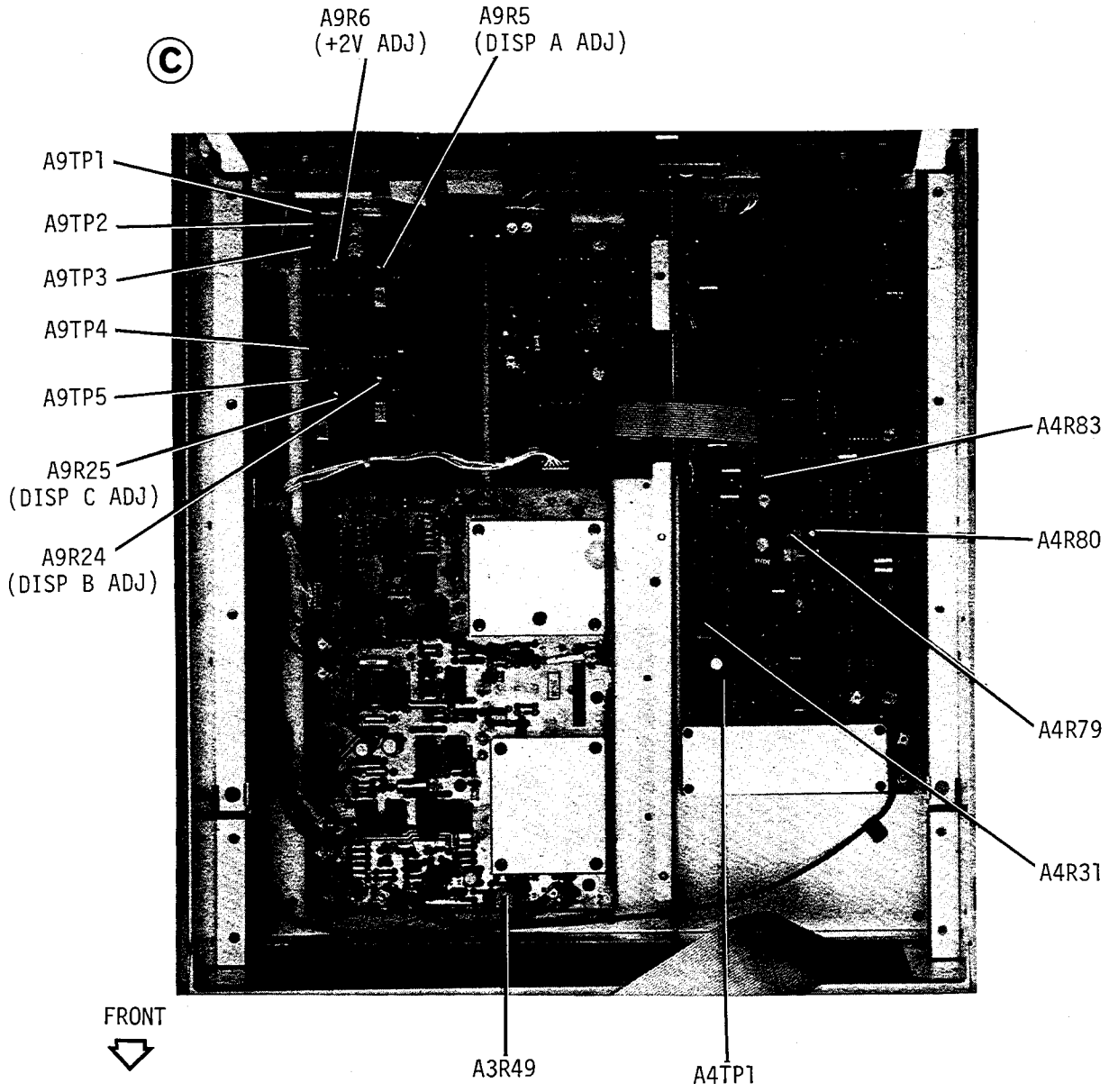


Figure 5-20. Adjustment Locations (cont'd).

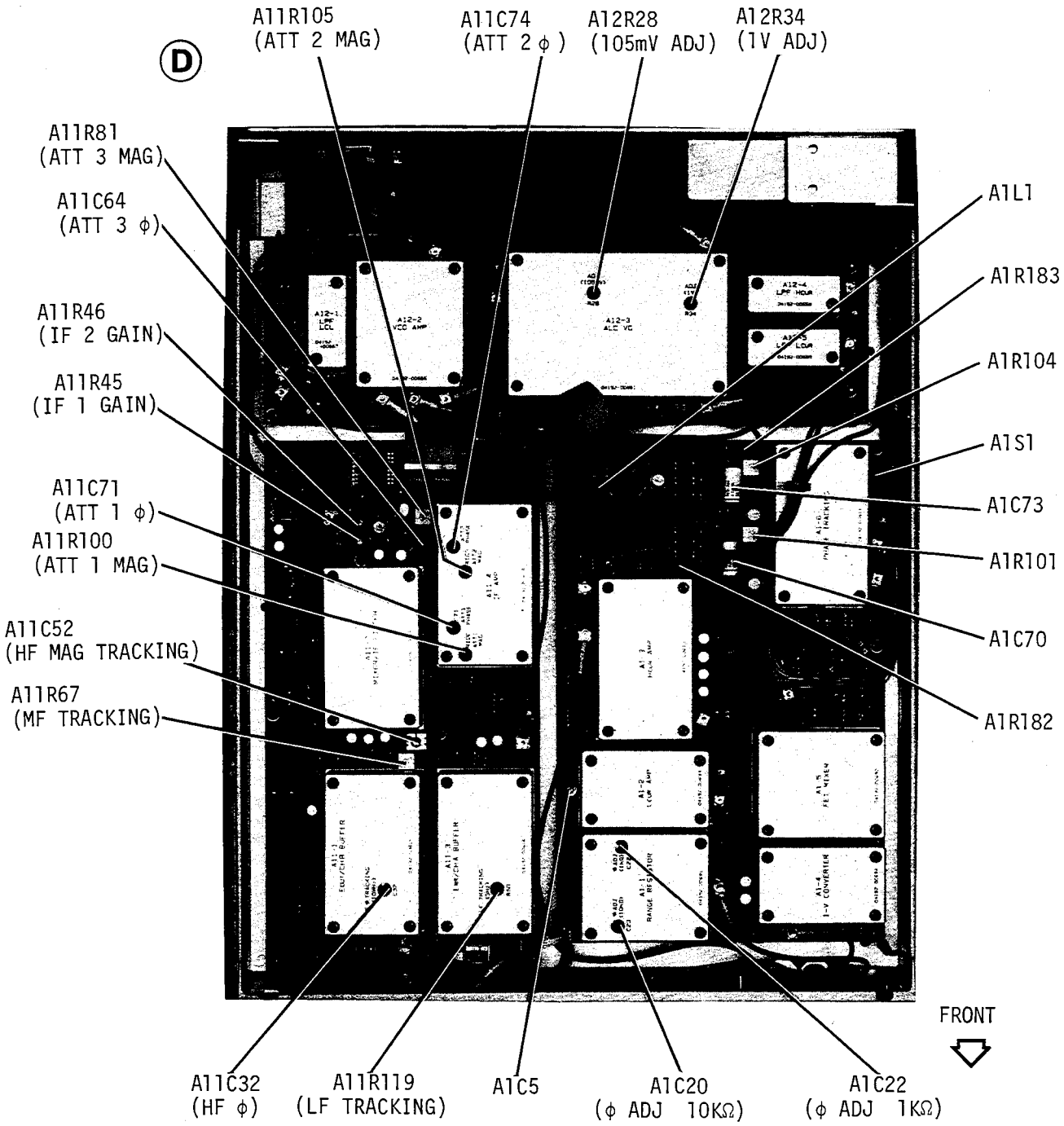


Figure 5-20. Adjustment Locations (cont'd).

# SECTION VI
# REPLACEABLE PARTS

## 6-1. INTRODUCTION.

6-2. This section contains information for ordering parts. Table 6-1 lists abbreviations used in the parts list and throughout the manual. Table 6-3 lists all replaceable parts in reference designator order. Table 6-2 contains the names and addresses that correspond to the manufacturer's code numbers.

## 6-3. ABBREVIATIONS.

6-4. Table 6-1 lists abbreviations used in parts list, schematics and throughout the manual. In some cases, two forms of abbreviations are used, one in all capital letters, and one in partial capitals or no capitals. This occurs because the abbreviations in parts list are always all capitals. However, in the schematic and in other parts of the manual, other abbreviation forms with both lower case and upper case letters are used.

## 6-5. REPLACEABLE PARTS LIST.

6-6. Table 6-3 is a list of replaceable parts and is organized as follows:

a. Electrical assemblies and their components in alphanumerical order by reference designation.
b. Chassis-mounted parts in alphanumerical order by reference designation.
c. Miscellaneous parts.
d. Illustrated parts breakdowns, if appropriate.

The information for each part includes:

a. The Hewlett-Packard part number.
b. The total quantity (Qty) in the instrument.
c. A description of the part.
d. A typical manufacturer of the part in a five-digit code.
e. The manufacturer's number for the part.

**Table 6-1. List of Reference Designators and Abbreviations.**

REFERENCE DESIGNATORS

| | |
|---|---|
| A | = assembly |
| B | = motor |
| BT | = battery |
| C | = capacitor |
| CP | = coupler |
| CR | = diode |
| DL | = delay line |
| DS | = device signaling (lamp) |
| E | = misc electronic part |
| F | = fuse |
| FL | = filter |
| J | = jack |
| K | = relay |
| L | = inductor |
| M | = meter |
| MP | = mechanical part |
| P | = plug |
| Q | = transistor |
| R | = resistor |
| RT | = thermistor |
| S | = switch |
| T | = transformer |
| TB | = terminal board |
| TP | = test point |
| U | = integrated circuit |
| V | = vacuum, tube, neon bulb, photocell, etc. |
| VR | = voltage regulator |
| W | = cable |
| X | = socket |
| Y | = crystal |

ABBREVIATIONS

| | |
|---|---|
| A | = amperes |
| A. F. C. | = automatic frequency control |
| AMPL | = amplifier |
| B. F. O. | = beat frequency oscillator |
| BE CU | = beryllium copper |
| BH | = binder head |
| BP | = bandpass |
| BRS | = brass |
| BWO | = backward wave oscillator |
| CCW | = counter-clockwise |
| CER | = ceramic |
| CMO | = cabinet mount only |
| COEF | = coefficient |
| COM | = common |
| COMP | = composition |
| COMPL | = complete |
| CONN | = connector |
| CP | = cadmium plate |
| CRT | = cathode-ray tube |
| CW | = clockwise |
| DEPC | = deposited carbon |
| DR | = drive |
| ELECT | = electrolytic |
| ENCAP | = encapsulated |
| EXT | = external |
| F | = farads |
| f | = femto = $10^{-15}$ |
| FH | = flat head |
| FIL H | = fillister head |
| FXD | = fixed |
| G | = giga = $10^{9}$ |
| GE | = germanium |
| GL | = glass |
| GRD | = ground(ed) |
| H | = henries |
| HEX | = hexagonal |
| HG | = mercury |
| HR | = hour(s) |
| Hz | = hertz |
| IF | = intermediate freq. |
| IMPG | = impregnated |
| INCD | = incandescent |
| INCL | = include(s) |
| INS | = insulation(ed) |
| INT | = internal |
| k | = kilo = 1000 |
| LH | = left hand |
| LIN | = linear taper |
| LK WASH | = lock washer |
| LOG | = logarithmic taper |
| LPF | = low pass filter |
| m | = milli = $10^{-3}$ |
| M | = meg = $10^{6}$ |
| MET FLM | = metal film |
| MET OX | = metallic oxide |
| MFR | = manufacturer |
| MINAT | = miniature |
| MOM | = momentary |
| MTG | = mounting |
| MY | = "mylar" |
| n | = nano = $10^{-9}$ |
| N/C | = normally closed |
| NE | = neon |
| NI PL | = nickel plate |
| N/O | = normally open |
| NPO | = negative positive zero (zero temperature coefficient) |
| NPN | = negative-positive-negative |
| NRFR | = not recommended for field replacement |
| NSR | = not separately replaceable |
| OBD | = order by description |
| OH | = oval head |
| OX | = oxide |
| P | = peak |
| PC | = printed circuit |
| p | = pico = $10^{-12}$ |
| PH BRZ | = phosphor bronze |
| PHL | = Phillips |
| PIV | = peak inverse voltage |
| PNP | = positive-negative-positive |
| P/O | = part of |
| POLY | = polystyrene |
| PORC | = porcelain |
| POS | = position(s) |
| POT | = potentiometer |
| PP | = peak-to-peak |
| PT | = point |
| PWV | = peak working voltage |
| RECT | = rectifier |
| RF | = radio frequency |
| RH | = round head or right hand |
| RMO | = rack mount only |
| RMS | = root-mean square |
| RWV | = reverse working voltage |
| S-B | = slow-blow |
| SCR | = screw |
| SE | = selenium |
| SECT | = section(s) |
| SEMICON | = semiconductor |
| SI | = silicon |
| SIL | = silver |
| SL | = slide |
| SPG | = spring |
| SPL | = special |
| SST | = stainless steel |
| SR | = split ring |
| STL | = steel |
| TA | = tantalum |
| TD | = time delay |
| TGL | = toggle |
| THD | = thread |
| TI | = titanium |
| TOL | = tolerance |
| TRIM | = trimmer |
| TWT | = traveling wave tube |
| μ | = micro = $10^{-6}$ |
| VAR | = variable |
| VDCW | = dc working volts |
| W/ | = with |
| W | = watts |
| WIV | = working inverse voltage |
| WW | = wirewound |
| W/O | = without |

0001-9700

The total quantity for each part is given only once – at the first appearance of the part number in the list.

Part numbers for the shield cases, screws, cable clamps, and cables (except for wiring on a board) on each board assembly, are not listed in Table 6-3. If required these parts must be ordered separately when ordering a complete board assembly. They are listed in Table 6-4 and 6-5 as Board Mounted Hardware and Cable Assemblies respectively.

## 6-7. ORDERING INFORMATION.

6-8. To order a part listed in the replaceable parts table, give the Hewlett-Packard part number, indicate the quantity required, and address the order to the nearest Hewlett-Packard office.

6-9. To order a part that is not listed in the replaceable parts table, state the full instrument model and serial number, the description and function of the part, and the number of parts required. Address your order to the nearest Hewlett-Packard office.

## 6-10. DIRECT MAIL ORDER SYSTEM.

6-11. Within the USA, Hewlett-Packard can supply parts through a direct mail order system. Advantages of using the system are:

a. Direct ordering and shipment from the HP Parts Center in Mountain View, California.

b. No maximum or minimum on any mail order (there is a minimum order amount for parts ordered through a local HP Office when the orders require billing and invoicing).

c. Prepaid transportation (there is a small handling charge for each order).

d. No invoices – to provide these advantages, a check or money order must accompany each order.

6-12. Mail order forms and specific ordering information is available through your local HP Office. Addresses and phone numbers are located at the back of this manual.

**Table 6-2. Manufacturers Code Lists.**

| MFR NO. | MANUFACTURER NAME | ADDRESS | | ZIP CODE |
|---|---|---|---|---|
| 00000 | ANY SATISFACTORY SUPPLIER | | | |
| 0003J | NIPPON ELECTRIC CO | | | |
| 01121 | ALLEN-BRADLEY CO | MILWAUKEE | WI | 53204 |
| 01295 | TEXAS INSTR INC SEMICOND CMPNT DIV | DALLAS | TX | 75222 |
| 01928 | RCA CORP SOLID STATE DIV | SOMERVILLE | NJ | 08876 |
| 02114 | FERROXCUBE CORP | SAUGERTIES | NY | 12477 |
| 03888 | KDI PYROFILM CORP | WHIPPANY | NJ | 07981 |
| 04713 | MOTOROLA SEMICONDUCTOR PRODUCTS | PHOENIX | AZ | 85062 |
| 06383 | PANDUIT CORP | TINLEY PARK | IL | 60477 |
| 06665 | PRECISION MONOLITHICS INC | SANTA CLARA | CA | 95050 |
| 07263 | FAIRCHILD SEMICONDUCTOR DIV | MOUNTAIN VIEW | CA | 94042 |
| 07716 | TRW INC BURLINGTON DIV | BURLINGTON | IA | 52601 |
| 0859C | NO M/F DESCRIPTION FOR THIS MFG NUMBER | | | |
| 14936 | GENERAL INSTR CORP SEMIDON PROD GP | HICKSVILLE | NY | 11802 |
| 18324 | SIGNETICS CORP | SUNNYVALE | CA | 94086 |
| 19701 | MEPCO/ELECTRA CORP | MINERAL WELLS | TX | 76067 |
| 24546 | CORNING GLASS WORKS (BRADFORD) | BRADFORD | PA | 16701 |
| 27014 | NATIONAL SEMICONDUCTOR CORP | SANTA CLARA | CA | 95051 |
| 27777 | VARO SEMICONDUCTOR INC | GARLAND | TX | 75040 |
| 28480 | HEWLETT-PACKARD CO CORPORATE HQ | PALO ALTO | CA | 94304 |
| 29832 | TELEDYNE PHILBRICK NEXUS | DEDHAM | MA | 02026 |
| 30161 | AAVID ENGINEERING INC | LACONIA | NH | 03246 |
| 32293 | INTERSIL INC | CUPERTINO | CA | 95014 |
| 32997 | BOURNS INC TRIMPOT PROD DIV | RIVERSIDE | CA | 92507 |
| 34335 | ADVANCED MICRO DEVICES INC | SUNNYVALE | CA | 94086 |
| 52763 | STETTNER-TRUSH INC | CAZENOVIA | NY | 13035 |
| 56289 | SPRAGUE ELECTRIC CO | NORTH ADAMS | MA | 01247 |
| 72136 | ELECTRO MOTIVE CORP SUB IEC | WILLIMANTIC | CT | 06226 |
| 74970 | JOHNSON E F CO | WASECA | MN | 56093 |
| 75042 | TRW INC PHILADELPHIA DIV | PHILADELPHIA | PA | 19108 |
| 75915 | LITTELFUSE INC | DES PLAINES | IL | 60016 |
| 8E175 | BURR BROWN CO | HUNTSVILLE | AL | 35801 |
| 98291 | SEALECTRO CORP | MAMARONECK | NY | 10544 |

## Table 6-3. Replaceable Parts

| Reference Designation | HP Part Number | C D | Qty | Description | Mfr Code | Mfr Part Number |
|---|---|---|---|---|---|---|
| A1 | 04192-66501 | 9 | 1 | RANGE RESISTOR/NULL DETECTOR (NOT INCLUDING THE SHIELD CASES) | 28480 | 04192-66501 |
| A1C1 | 0160-3456 | 6 | 61 | CAPACITOR-FXD 1000PF +-10% 1KVDC CER | 28480 | 0160-3456 |
| A1C2 | 0160-3456 | 6 | | CAPACITOR-FXD 1000PF +-10% 1KVDC CER | 28480 | 0160-3456 |
| A1C3 | 0160-3456 | 6 | | CAPACITOR-FXD 1000PF +-10% 1KVDC CER | 28480 | 0160-3456 |
| A1C4 | 0160-3456 | 6 | | CAPACITOR-FXD 1000PF +-10% 1KVDC CER | 28480 | 0160-3456 |
| A1C5 | 0121-0046 | 2 | 1 | CAPACITOR-V TRMR-CER 9-35PF 200V PC-MTG | 52763 | 304322 9/35PF N650 |
| A1C6 | 0160-3456 | 6 | | CAPACITOR-FXD 1000PF +-10% 1KVDC CER | 28480 | 0160-3456 |
| A1C7 | 0160-3456 | 6 | | CAPACITOR-FXD 1000PF +-10% 1KVDC CER | 28480 | 0160-3456 |
| A1C8 | 0160-3466 | 8 | 25 | CAPACITOR-FXD 100PF +-10% 1KVDC CER | 28480 | 0160-3466 |
| A1C9 | 0160-3466 | 8 | | CAPACITOR-FXD 100PF +-10% 1KVDC CER | 28480 | 0160-3466 |
| A1C10 | 0160-0128 | 3 | 5 | CAPACITOR-FXD 2.2UF +-20% 50VDC CER | 28480 | 0160-0128 |
| A1C12 | 0160-2150 | 5 | 7 | CAPACITOR-FXD 33PF +-5% 300VDC MICA | 28480 | 0160-2150 |
| A1C14 | 0160-2234 | 6 | 4 | CAPACITOR-FXD .51PF +-.25PF 500VDC CER | 28480 | 0160-2234 |
| A1C15 | 0150-0059 | 5 | 5 | CAPACITOR-FXD 3.3PF 500VDC CER | | |
| A1C16 | 0160-2265 | 1 | 1 | CAPACITOR-FXD 22P 500VDC CER | | |
| A1C17 | 0180-1085 | 5 | 85 | CAPACITOR-FXD 4.7UF 16VDC TA | 28480 | 0180-1085 |
| A1C18 | 0180-1085 | 5 | | CAPACITOR-FXD 4.7UF 16VDC TA | 28480 | 0180-1085 |
| A1C19 | 0180-1085 | 5 | | CAPACITOR-FXD 4.7UF 16VDC TA | 28480 | 0180-1085 |
| A1C20 | 0121-0127 | 0 | 1 | CAPACITOR-V TRMR-AIR 2.1-13.3PF 350V | 74970 | 189-0505-028 |
| A1C21 | 0160-0127 | 2 | 21 | CAPACITOR-FXD 1UF +-20% 25VDC CER | 28480 | 0160-0127 |
| A1C22 | 0121-0127 | 6 | 2 | CAPACITOR-V TRMR-AIR 1.7-14.1P 350V PC-MTG | | |
| A1C23 | 0160-4835 | 8 | | CAPACITOR-FXD .1UF 10% 50VDC CER | | |
| A1C24 | 0160-2940 | 1 | 7 | CAPACITOR-FXD 470PF +-5% 300VDC MICA | 28480 | 0160-2940 |
| A1C25 | 0180-1085 | 5 | | CAPACITOR-FXD 4.7UF 16VDC TA | 28480 | 0180-1085 |
| A1C26 | 0180-1085 | 5 | | CAPACITOR-FXD 4.7UF 16VDC TA | 28480 | 0180-1085 |
| A1C27 | 0180-1085 | 5 | | CAPACITOR-FXD 4.7UF 16VDC TA | 28480 | 0180-1085 |
| A1C28 | 0160-2236 | 8 | 1 | CAPACITOR-FXD 1PF +-.25PF 500VDC CER | 28480 | 0160-2236 |
| A1C29 | 0180-1077 | 5 | 9 | CAPACITOR-FXD 10 UF 20VDC TA | 28480 | 0180-1077 |
| A1C30 | 0140-0210 | 2 | 11 | CAPACITOR-FXD 270PF +-5% 300VDC MICA | 72136 | DM15F271J0300WV1CR |
| A1C31 | 0160-4835 | 8 | | CAPACITOR-FXD .1UF 10% 50VDC CER | | |
| A1C32 | 0160-3456 | 6 | | CAPACITOR-FXD 1000PF +-10% 1KVDC CER | 28480 | 0160-3456 |
| A1C33 | 0180-1085 | 5 | | CAPACITOR-FXD 4.7UF 16VDC TA | 28480 | 0180-1085 |
| A1C34 | 0160-4835 | 8 | | CAPACITOR-FXD .1UF 10% 50VDC CER | | |
| A1C35 | 0160-2238 | 0 | 2 | CAPACITOR-FXD 1.5PF +-.25PF 500VDC CER | 28480 | 0160-2238 |
| A1C36 | 0160-2238 | 0 | | CAPACITOR-FXD 1.5PF +-.25PF 500VDC CER | 28480 | 0160-2238 |
| A1C37 | 0160-3456 | 6 | | CAPACITOR-FXD 1000PF +-10% 1KVDC CER | 28480 | 0160-3456 |
| A1C38 | 0160-3456 | 6 | | CAPACITOR-FXD 1000PF +-10% 1KVDC CER | 28480 | 0160-3456 |
| A1C39 | 0160-3456 | 6 | | CAPACITOR-FXD 1000PF +-10% 1KVDC CER | 28480 | 0160-3456 |
| A1C40 | 0180-1077 | 5 | | CAPACITOR-FXD 10 UF 20VDC TA | 28480 | 0180-1077 |
| A1C41 | 0160-3456 | 6 | | CAPACITOR-FXD 1000PF +-10% 1KVDC CER | 28480 | 0160-3456 |
| A1C42 | 0160-3456 | 6 | | CAPACITOR-FXD 1000PF +-10% 1KVDC CER | 28480 | 0160-3456 |
| A1C43 | 0160-2249 | 3 | 1 | CAPACITOR-FXD 4.7PF +-.25PF 500VDC CER | 28480 | 0160-2249 |
| A1C44 | 0160-3456 | 6 | | CAPACITOR-FXD 1000PF +-10% 1KVDC CER | 28480 | 0160-3456 |
| A1C45 | 0160-3456 | 6 | | CAPACITOR-FXD 1000PF +-10% 1KVDC CER | 28480 | 0160-3456 |
| A1C46 | 0140-0191 | 8 | 6 | CAPACITOR-FXD 56PF +-5% 300VDC MICA | 72136 | DM15E560J0300WV1CR |
| A1C47 | 0160-0128 | 3 | | CAPACITOR-FXD 2.2UF +-20% 50VDC CER | 28480 | 0160-0128 |
| A1C48 | 0160-0128 | 3 | | CAPACITOR-FXD 2.2UF +-20% 50VDC CER | 28480 | 0160-0128 |
| A1C49 | 0160-2204 | 0 | 17 | CAPACITOR-FXD 100PF +-5% 300VDC MICA | 28480 | 0160-2204 |
| A1C50 | 0160-0128 | 3 | | CAPACITOR-FXD 2.2UF +-20% 50VDC CER | 28480 | 0160-0128 |
| A1C51 | 0160-0128 | 3 | | CAPACITOR-FXD 2.2UF +-20% 50VDC CER | 28480 | 0160-0128 |
| A1C52 | 0160-3847 | 9 | 92 | CAPACITOR-FXD .01UF +100-0% 50VDC CER | 28480 | 0160-3847 |
| A1C53 | 0160-3847 | 9 | | CAPACITOR-FXD .01UF +100-0% 50VDC CER | 28480 | 0160-3847 |
| A1C54 | 0160-3466 | 8 | | CAPACITOR-FXD 100PF +-10% 1KVDC CER | 28480 | 0160-3466 |
| A1C55 | 0160-3466 | 8 | | CAPACITOR-FXD 100PF +-10% 1KVDC CER | 28480 | 0160-3466 |
| A1C56 | 0180-1085 | 5 | | CAPACITOR-FXD 4.7UF 16VDC TA | 28480 | 0180-1085 |
| A1C57 | 0180-1085 | 5 | | CAPACITOR-FXD 4.7UF 16VDC TA | 28480 | 0180-1085 |
| A1C58 | 0180-1077 | 5 | | CAPACITOR-FXD 10 UF 20VDC TA | 28480 | 0180-1077 |
| A1C59 | 0180-1077 | 5 | | CAPACITOR-FXD 10 UF 20VDC TA | 28480 | 0180-1077 |
| A1C60 | 0180-1077 | 5 | | CAPACITOR-FXD 10 UF 20VDC TA | 28480 | 0180-1077 |
| A1C61 | 0180-1077 | 5 | | CAPACITOR-FXD 10 UF 20VDC TA | 28480 | 0180-1077 |
| A1C62 | 0180-1085 | 5 | | CAPACITOR-FXD 4.7UF 16VDC TA | 28480 | 0180-1085 |
| A1C63 | 0180-1085 | 5 | | CAPACITOR-FXD 4.7UF 16VDC TA | 28480 | 0180-1085 |
| A1C64 | 0180-1085 | 5 | | CAPACITOR-FXD 4.7UF 16VDC TA | 28480 | 0180-1085 |
| A1C65 | 0180-1085 | 5 | | CAPACITOR-FXD 4.7UF 16VDC TA | 28480 | 0180-1085 |
| A1C66 | 0160-3466 | 8 | | CAPACITOR-FXD 100PF +-10% 1KVDC CER | 28480 | 0160-3466 |
| A1C67 | 0180-1085 | 5 | | CAPACITOR-FXD 4.7UF 16VDC TA | 28480 | 0180-1085 |
| A1C68 | 0180-1085 | 5 | | CAPACITOR-FXD 4.7UF 16VDC TA | 28480 | 0180-1085 |
| A1C69 | 0160-3456 | 6 | | CAPACITOR-FXD 1000PF +-10% 1KVDC CER | 28480 | 0160-3456 |
| A1C70 | 0160-3501 | 2 | 2 | CAPACITOR-FXD 4UF +-10% 50VDC MET-POLYC | 28480 | 0160-3501 |
| A1C71 | 0180-1085 | 5 | | CAPACITOR-FXD 4.7UF 16VDC TA | 28480 | 0180-1085 |

See introduction to this section for ordering information
*Indicates factory selected value

## Table 6-3. Replaceable Parts

| Reference Designation | HP Part Number | C D | Qty | Description | Mfr Code | Mfr Part Number |
|---|---|---|---|---|---|---|
| A1C72 | 0180-1085 | 5 | | CAPACITOR-FXD 4.7UF 16VDC TA | 28480 | 0180-1085 |
| A1C73 | 0160-3501 | 2 | | CAPACITOR-FXD 4UF +-10% 50VDC MET-POLYC | 28480 | 0160-3501 |
| A1C74 | 0180-1077 | 5 | | CAPACITOR-FXD 10 UF 20VDC TA | 28480 | 0180-1077 |
| A1C75 | 0180-1077 | 5 | | CAPACITOR-FXD 10 UF 20VDC TA | 28480 | 0180-1077 |
| A1C76 | 0180-1085 | 5 | | CAPACITOR-FXD 4.7UF 16VDC TA | 28480 | 0180-1085 |
| A1C77 | 0180-1085 | 5 | | CAPACITOR-FXD 4.7UF 16VDC TA | 28480 | 0180-1085 |
| A1C78 | 0160-3456 | 6 | | CAPACITOR-FXD 1000PF +-10% 1KVDC CER | 28480 | 0160-3456 |
| A1C79 | 0180-1085 | 5 | | CAPACITOR-FXD 4.7UF 16VDC TA | 28480 | 0180-1085 |
| A1C80 | 0180-1085 | 5 | | CAPACITOR-FXD 4.7UF 16VDC TA | 28480 | 0180-1085 |
| A1C81 | 0160-3456 | 6 | | CAPACITOR-FXD 1000PF +-10% 1KVDC CER | 28480 | 0160-3456 |
| A1C82 | 0180-1085 | 5 | | CAPACITOR-FXD 4.7UF 16VDC TA | 28480 | 0180-1085 |
| A1C83 | 0180-1085 | 5 | | CAPACITOR-FXD 4.7UF 16VDC TA | 28480 | 0180-1085 |
| A1C84 | 0160-2204 | 0 | | CAPACITOR-FXD 100PF +-5% 300VDC MICA | 28480 | 0160-2204 |
| A1C85 | 0160-2204 | 0 | | CAPACITOR-FXD 100PF +-5% 300VDC MICA | 28480 | 0160-2204 |
| A1C86 | 0160-3466 | 8 | | CAPACITOR-FXD 100PF +-10% 1KVDC CER | 28480 | 0160-3466 |
| A1C87 | 0160-3466 | 8 | | CAPACITOR-FXD 100PF +-10% 1KVDC CER | 28480 | 0160-3466 |
| A1C88 | 0180-1083 | 3 | 81 | CAPACITOR-FXD 33UF 25VDC AL | 28480 | 0180-1083 |
| A1C89 | 0160-2204 | 0 | | CAPACITOR-FXD 100PF +-5% 300VDC MICA | 28480 | 0160-2204 |
| A1C90 | 0180-1079 | 7 | 2 | CAPACITOR-FXD 2200UF 6.3V AL | 28480 | 0180-1079 |
| A1C91 | 0180-1085 | 5 | | CAPACITOR-FXD 4.7UF 16VDC TA | 28480 | 0180-1085 |
| A1C92 | 0180-1085 | 5 | | CAPACITOR-FXD 4.7UF 16VDC TA | 28480 | 0180-1085 |
| A1C93 | 0180-1085 | 5 | | CAPACITOR-FXD 4.7UF 16VDC TA | 28480 | 0180-1085 |
| A1C94 | 0160-3847 | 9 | | CAPACITOR-FXD .01UF +100-0% 50VDC CER | 28480 | 0160-3847 |
| A1C95 | 0160-3847 | 9 | | CAPACITOR-FXD .01UF +100-0% 50VDC CER | 28480 | 0160-3847 |
| A1C96 | 0180-1085 | 5 | | CAPACITOR-FXD 4.7UF 16VDC TA | 28480 | 0180-1085 |
| A1C97 | 0160-2150 | 5 | | CAPACITOR-FXD 33PF +-5% 300VDC MICA | 28480 | 0160-2150 |
| A1C98 | 0160-2150 | 5 | | CAPACITOR-FXD 33PF +-5% 300VDC MICA | 28480 | 0160-2150 |
| A1C99 | 0160-4835 | 8 | | CAPACITOR-FXD .1UF 10% 50VDC CER | | |
| A1C100 | 0180-1079 | 7 | | CAPACITOR-FXD 2200UF 6.3V AL | 28480 | 0180-1079 |
| A1C101 | 0160-3456 | 6 | | CAPACITOR-FXD 1000PF +-10% 1KVDC CER | 28480 | 0160-3456 |
| A1C102 | 0180-0374 | 3 | 4 | CAPACITOR-FXD 10UF+-10% 20VDC TA | 56289 | 150D106X9020B2 |
| A1C103 | 0180-0374 | 3 | | CAPACITOR-FXD 10UF+-10% 20VDC TA | 56289 | 150D106X9020B2 |
| A1C104 | 0180-1085 | 5 | | CAPACITOR-FXD 4.7UF 16VDC TA | 28480 | 0180-1085 |
| A1C105 | 0180-1085 | 5 | | CAPACITOR-FXD 4.7UF 16VDC TA | 28480 | 0180-1085 |
| A1C106 | 0180-1085 | 5 | | CAPACITOR-FXD 4.7UF 16VDC TA | 28480 | 0180-1085 |
| A1C107 | 0160-3847 | 9 | | CAPACITOR-FXD .01UF +100-0% 50VDC CER | 28480 | 0160-3847 |
| A1C108 | 0160-3847 | 9 | | CAPACITOR-FXD .01UF +100-0% 50VDC CER | 28480 | 0160-3847 |
| A1C109 | 0160-2940 | 1 | | CAPACITOR-FXD 470PF +-5% 300VDC MICA | 28480 | 0160-2940 |
| A1C110 | 0160-3847 | 9 | | CAPACITOR-FXD .01UF +100-0% 50VDC CER | 28480 | 0160-3847 |
| A1C111 | 0160-2940 | 1 | | CAPACITOR-FXD 470PF +-5% 300VDC MICA | 28480 | 0160-2940 |
| A1C112 | 0160-2249 | 3 | 6 | CAPACITOR-FXD 4.7PF +-.25PF 500VDC CER | 28480 | 0160-2265 |
| A1C113 | 0160-2307 | 3 | | CAPACITOR-FXD 47PF +-5% 300VDC MICA | 28480 | 0160-2265 |
| A1C114 | 0160-4835 | 8 | | CAPACITOR-FXD .1UF 10% 50VDC CER | | |
| A1C115 | 0160-3456 | 6 | | CAPACITOR-FXD 1000PF +-10% 1KVDC CER | 28480 | 0160-3456 |
| A1C116 | 0140-0210 | 2 | | CAPACITOR-FXD 270PF +-5% 300VDC MICA | 72136 | DM15F271J0300WV1CR |
| A1C117 | 0160-0127 | 2 | | CAPACITOR-FXD 1UF +-20% 25VDC CER | 28480 | 0160-0127 |
| A1C118 | 0160-0300 | 3 | 2 | CAPACITOR-FXD 2700PF +-10% 200VDC POLYE | 28480 | 0160-0300 |
| A1C119 | 0160-3847 | 9 | | CAPACITOR-FXD .01UF +100-0% 50VDC CER | 28480 | 0160-3847 |
| A1C120 | 0180-1085 | 5 | | CAPACITOR-FXD 4.7UF 16VDC TA | 28480 | 0180-1085 |
| A1C121 | 0180-0374 | 3 | | CAPACITOR-FXD 10UF+-10% 20VDC TA | 56289 | 150D106X9020B2 |
| A1C122 | 0180-0374 | 3 | | CAPACITOR-FXD 10UF+-10% 20VDC TA | 56289 | 150D106X9020B2 |
| A1C123 | 0180-1085 | 5 | | CAPACITOR-FXD 4.7UF 16VDC TA | 28480 | 0180-1085 |
| A1C124 | 0160-3847 | 9 | | CAPACITOR-FXD .01UF +100-0% 50VDC CER | 28480 | 0160-3847 |
| A1C125 | 0180-1085 | 5 | | CAPACITOR-FXD 4.7UF 16VDC TA | 28480 | 0180-1085 |
| A1C126 | 0160-4835 | 8 | | CAPACITOR-FXD .1UF 10% 50VDC CER | | |
| A1C127 | 0160-4835 | 8 | | CAPACITOR-FXD .1UF 10% 50VDC CER | | |
| A1C128 | 0160-3466 | 8 | | CAPACITOR-FXD 100PF +-10% 1KVDC CER | 28480 | 0160-3466 |
| A1C129 | 0180-1077 | 5 | | CAPACITOR-FXD 10 UF 20VDC TA | 28480 | 0180-1077 |
| A1C130 | 0160-0127 | 2 | | CAPACITOR-FXD 1UF +-20% 25VDC CER | 28480 | 0160-0127 |
| A1C131 | 0160-0299 | 9 | 2 | CAPACITOR-FXD 1800PF +-10% 200VDC POLYE | 28480 | 0160-0299 |
| A1C132 | 0160-0300 | 3 | | CAPACITOR-FXD 2700PF +-10% 200VDC POLYE | 28480 | 0160-0300 |
| A1C133 | 0160-0299 | 9 | | CAPACITOR-FXD 1800PF +-10% 200VDC POLYE | 28480 | 0160-0299 |
| A1C134 | 0180-1085 | 5 | | CAPACITOR-FXD 4.7UF 16VDC TA | 28480 | 0180-1085 |
| A1C135 | 0160-2204 | | | CAPACITOR-FXD 100PF | | |
| A1CR1 | 1901-0050 | 3 | 72 | DIODE-SWITCHING 80V 200MA 2NS DO-35 | 28480 | 1901-0050 |
| A1CR2 | 1901-0050 | 3 | | DIODE-SWITCHING 80V 200MA 2NS DO-35 | 28480 | 1901-0050 |
| A1CR3 | 1901-0050 | 3 | | DIODE-SWITCHING 80V 200MA 2NS DO-35 | 28480 | 1901-0050 |
| A1CR4 | 1901-0050 | 3 | | DIODE-SWITCHING 80V 200MA 2NS DO-35 | 28480 | 1901-0050 |
| A1CR5 | 1901-0050 | 3 | | DIODE-SWITCHING 80V 200MA 2NS DO-35 | 28480 | 1901-0050 |
| A1CR6 | 1901-0050 | 3 | | DIODE-SWITCHING 80V 200MA 2NS DO-35 | 28480 | 1901-0050 |
| A1CR7 | 1901-0050 | 3 | | DIODE-SWITCHING 80V 200MA 2NS DO-35 | 28480 | 1901-0050 |
| A1CR8 | 1902-0041 | 4 | 11 | DIODE-ZNR 5.11V 5% DO-35 PD=.4W | 28480 | 1902-0041 |
| A1CR9 | 1901-0050 | 3 | | DIODE-SWITCHING 80V 200MA 2NS DO-35 | 28480 | 1901-0050 |
| A1CR10 | 1902-0041 | 4 | | DIODE-ZNR 5.11V 5% DO-35 PD=.4W | 28480 | 1902-0041 |
| A1CR11 | 1902-3036 | 3 | 3 | DIODE-ZNR 3.16V 5% DO-7 PD=.4W TC=-.064% | 28480 | 1902-3036 |
| A1CR12 | 1902-3036 | 3 | | DIODE-ZNR 3.16V 5% DO-7 PD=.4W TC=-.064% | 28480 | 1902-3036 |
| A1CR13 | 1901-0050 | 3 | | DIODE-SWITCHING 80V 200MA 2NS DO-35 | 28480 | 1901-0050 |
| A1CR14 | 1901-0050 | 3 | | DIODE-SWITCHING 80V 200MA 2NS DO-35 | 28480 | 1901-0050 |
| A1CR15 | 1901-0050 | 3 | | DIODE-SWITCHING 80V 200MA 2NS DO-35 | 28480 | 1901-0050 |

See introduction to this section for ordering information
*Indicates factory selected value

## Table 6-3. Replaceable Parts

| Reference Designation | HP Part Number | C D | Qty | Description | Mfr Code | Mfr Part Number |
|---|---|---|---|---|---|---|
| A1CR16 | 1901-0050 | 3 | | DIODE-SWITCHING 80V 200MA 2NS DO-35 | 28480 | 1901-0050 |
| A1CR17 | 1901-0050 | 3 | | DIODE-SWITCHING 80V 200MA 2NS DO-35 | 28480 | 1901-0050 |
| A1CR18 | 1901-0050 | 3 | | DIODE-SWITCHING 80V 200MA 2NS DO-35 | 28480 | 1901-0050 |
| A1CR19 | 1901-0050 | 3 | | DIODE-SWITCHING 80V 200MA 2NS DO-35 | 28480 | 1901-0050 |
| A1CR20 | 1901-0050 | 3 | | DIODE-SWITCHING 80V 200MA 2NS DO-35 | 28480 | 1901-0050 |
| A1CR21 | 1901-0050 | 3 | | DIODE-SWITCHING 80V 200MA 2NS DO-35 | 28480 | 1901-0050 |
| A1CR22 | 1901-0050 | 3 | | DIODE-SWITCHING 80V 200MA 2NS DO-35 | 28480 | 1901-0050 |
| A1CR23 | 1901-0050 | 3 | | DIODE-SWITCHING 80V 200MA 2NS DO-35 | 28480 | 1901-0050 |
| A1CR24 | 1901-0050 | 3 | | DIODE-SWITCHING 80V 200MA 2NS DO-35 | 28480 | 1901-0050 |
| A1CR25 | 1901-0050 | 3 | | DIODE-SWITCHING 80V 200MA 2NS DO-35 | 28480 | 1901-0050 |
| A1CR26 | 1901-0050 | 3 | | DIODE-SWITCHING 80V 200MA 2NS DO-35 | 28480 | 1901-0050 |
| A1CR27 | 1902-0041 | 4 | | DIODE-ZNR 5.11V 5% DO-35 PD=.4W | 28480 | 1902-0041 |
| A1CR28 | 1901-0050 | 3 | | DIODE-SWITCHING 80V 200MA 2NS DO-35 | 28480 | 1901-0050 |
| A1CR29 | 1901-0050 | 3 | | DIODE-SWITCHING 80V 200MA 2NS DO-35 | 28480 | 1901-0050 |
| A1CR30 | 1901-0050 | 3 | | DIODE-SWITCHING 80V 200MA 2NS DO-35 | 28480 | 1901-0050 |
| A1CR31 | 1901-0050 | 3 | | DIODE-SWITCHING 80V 200MA 2NS DO-35 | 28480 | 1901-0050 |
| A1CR32 | 1901-0050 | 3 | | DIODE-SWITCHING 80V 200MA 2NS DO-35 | 28480 | 1901-0050 |
| A1CR33 | 1901-0050 | 3 | | DIODE-SWITCHING 80V 200MA 2NS DO-35 | 28480 | 1901-0050 |
| A1CR34 | 1901-0050 | 3 | | DIODE-SWITCHING 80V 200MA 2NS DO-35 | 28480 | 1901-0050 |
| A1CR35 | 1901-0050 | 3 | | DIODE-SWITCHING 80V 200MA 2NS DO-35 | 28480 | 1901-0050 |
| A1CR36 | 1901-0050 | 3 | | DIODE-SWITCHING 80V 200MA 2NS DO-35 | 28480 | 1901-0050 |
| A1CR37 | 1902-0041 | 4 | | DIODE-ZNR 5.11V 5% DO-35 PD=.4W | 28480 | 1902-0041 |
| A1CR38 | 1901-0050 | | | DIODE-SWITCHING 80V 200MA 2NS DO-35 | | |
| A1CR39 | 1902-3136 | | | DIODE-ZNR 8.06V 12.5MA DO-35 | | |
| A1CR40 | 1902-3136 | | | DIODE-ZNR 8.06V 12.5MA DO-35 | | |
| A1CR41 | 1902-3136 | | | DIODE-ZNR 8.06V 12.5MA DO-35 | | |
| A1CR42 | 1902-3136 | | | DIODE-ZNR 8.06V 12.5MA DO-35 | | |
| A1F1 | 2110-0650 | | | FUSE .125A 125V | | |
| A1J1 | 1251-4938 | 5 | 2 | CONNECTOR 3-PIN M METRIC POST TYPE | 28480 | 1251-4938 |
| A1J2 | 1250-0257 | 1 | 40 | CONNECTOR-RF SMB M PC 50-OHM | 28480 | 1250-0257 |
| A1J3 | 1250-0257 | 1 | | CONNECTOR-RF SMB M PC 50-OHM | 28480 | 1250-0257 |
| A1J4 | 1200-0607 | 0 | 20 | SOCKET-IC 16-CONT DIP DIP-SLDR | 28480 | 1200-0607 |
| A1J5 | 1200-0607 | 0 | | SOCKET-IC 16-CONT DIP DIP-SLDR | 28480 | 1200-0607 |
| A1J6 | 1250-0257 | 1 | | CONNECTOR-RF SMB M PC 50-OHM | 28480 | 1250-0257 |
| A1J7 | 1250-0257 | 1 | | CONNECTOR-RF SMB M PC 50-OHM | 28480 | 1250-0257 |
| A1J8 | 1250-0257 | 1 | | CONNECTOR-RF SMB M PC 50-OHM | 28480 | 1250-0257 |
| A1J9 | 1251-3197 | 6 | 3 | CONNECTOR 12-PIN M POST TYPE | 28480 | 1251-3197 |
| A1J10 | 1251-4822 | 6 | 7 | CONNECTOR 3-PIN M POST TYPE | 28480 | 1251-4822 |
| A1J11 | 1251-4822 | 6 | | CONNECTOR 3-PIN M POST TYPE | 28480 | 1251-4822 |
| A1J12 | 1250-0257 | 1 | | CONNECTOR-RF SMB M PC 50-OHM | 28480 | 1250-0257 |
| A1J13 | 1250-0257 | 1 | | CONNECTOR-RF SMB M PC 50-OHM | 28480 | 1250-0257 |
| A1J14 | 1250-0257 | 1 | | CONNECTOR-RF SMB M PC 50-OHM | 28480 | 1250-0257 |
| A1J15 | 1250-0257 | 1 | | CONNECTOR-RF SMB M PC 50-OHM | 28480 | 1250-0257 |
| A1J16 | 1251-1636 | | | CONNECTOR-SGL CONT SKT .04-IN-BSC-SZ RND | | |
| A1J17 | 1251-1636 | | | CONNECTOR-SGL CONT SKT .04-IN-BSC-SZ RND | | |
| A1K1 | 0490-1269 | 4 | 3 | RELAY 1C 12VDC-COIL .66A 30VDC | 28480 | 0490-1269 |
| A1K2 | 0490-0240 | 9 | 2 | RELAY-REED 1A | 28480 | 0490-0240 |
| A1K3 | 0490-0240 | 9 | | RELAY-REED 1A | 28480 | 0490-0240 |
| A1K4 | 0490-0237 | 4 | 2 | RELAY-REED 2A | 28480 | 0490-0237 |
| A1K5 | 0490-0237 | 4 | | RELAY-REED 2A | 28480 | 0490-0237 |
| A1K6 | 0490-1269 | 4 | | RELAY 1C 12VDC-COIL .66A 30VDC | 28480 | 0490-1269 |
| A1L1 | 9140-0114 | 4 | 34 | INDUCTOR RF-CH-MLD 10UH 10% .166DX.385LG | 28480 | 9140-0114 |
| A1L2 | 9140-0114 | 4 | | INDUCTOR RF-CH-MLD 10UH 10% .166DX.385LG | 28480 | 9140-0114 |
| A1L3 | 9140-0114 | 4 | | INDUCTOR RF-CH-MLD 10UH 10% .166DX.385LG | 28480 | 9140-0114 |
| A1L4 | 9140-0158 | 6 | 9 | INDUCTOR RF-CH-MLD 1UH 10% .105DX.26LG | 28480 | 9140-0158 |
| A1L5 | 9140-0129 | 1 | 16 | INDUCTOR RF-CH-MLD 220UH 5% .166DX.385LG | 28480 | 9140-0129 |
| A1L6 | 9140-0129 | 1 | | INDUCTOR RF-CH-MLD 220UH 5% .166DX.385LG | 28480 | 9140-0129 |
| A1L7 | 9140-0098 | 3 | 6 | INDUCTOR RF-CH-MLD 2.2UH 10% | 28480 | 9140-0098 |
| A1L8 | 9140-0131 | 5 | 1 | INDUCTOR RF-CH-MLD 10MH 5% .25DX.75LG | 28480 | 9140-0131 |
| A1L9 | 9140-0114 | 4 | | INDUCTOR RF-CH-MLD 10UH 10% .166DX.385LG | 28480 | 9140-0114 |
| A1L10 | 9100-1665 | 8 | 2 | INDUCTOR RF-CH-MLD 3.3MH 5% .23DX.57LG | 28480 | 9100-1665 |
| A1L11 | 9100-1665 | 8 | | INDUCTOR RF-CH-MLD 3.3MH 5% .23DX.57LG | 28480 | 9100-1665 |
| A1Q1 | 1853-0354 | 7 | 19 | TRANSISTOR PNP SI TO-92 PD=350MW | 28480 | 1853-0354 |
| A1Q2 | 1854-0215 | 1 | 32 | TRANSISTOR NPN SI PD=350MW FT=300MHZ | 04713 | 2N3904 |
| A1Q3 | 1854-0215 | 1 | | TRANSISTOR NPN SI PD=350MW FT=300MHZ | 04713 | 2N3904 |
| A1Q4 | 1853-0354 | 7 | | TRANSISTOR PNP SI TO-92 PD=350MW | 28480 | 1853-0354 |
| A1Q5 | 1854-0247 | 9 | 11 | TRANSISTOR NPN SI TO-39 PD=1W FT=800MHZ | 28480 | 1854-0247 |
| A1Q6 | 1853-0012 | 4 | 5 | TRANSISTOR PNP 2N2904A SI TO-39 PD=600MW | 01295 | 2N2904A |
| A1Q7 | 1854-0247 | 9 | | TRANSISTOR NPN SI TO-39 PD=1W FT=800MHZ | 28480 | 1854-0247 |
| A1Q8 | 1854-0215 | 1 | | TRANSISTOR NPN SI PD=350MW FT=300MHZ | 04713 | 2N3904 |
| A1Q9 | 1853-0354 | 7 | | TRANSISTOR PNP SI TO-92 PD=350MW | 28480 | 1853-0354 |
| A1Q10 | 1853-0036 | 2 | 17 | TRANSISTOR PNP SI PD=310MW FT=250MHZ | 28480 | 1853-0036 |
| A1Q11 | 1853-0036 | 2 | | TRANSISTOR PNP SI PD=310MW FT=250MHZ | 28480 | 1853-0036 |
| A1Q12 | 1854-0215 | 1 | | TRANSISTOR NPN SI PD=350MW FT=300MHZ | 04713 | 2N3904 |
| A1Q13 | 1853-0354 | 7 | | TRANSISTOR PNP SI TO-92 PD=350MW | 28480 | 1853-0354 |
| A1Q14 | 1854-0247 | 9 | | TRANSISTOR NPN SI TO-39 PD=1W FT=800MHZ | 28480 | 1854-0247 |
| A1Q15 | 1854-0215 | 1 | | TRANSISTOR NPN SI PD=350MW FT=300MHZ | 04713 | 2N3904 |
| A1Q16 | 1853-0036 | 2 | | TRANSISTOR PNP SI PD=310MW FT=250MHZ | 28480 | 1853-0036 |
| A1Q17 | 1853-0036 | 2 | | TRANSISTOR PNP SI PD=310MW FT=250MHZ | 28480 | 1853-0036 |
| A1Q18 | 1854-0247 | 9 | | TRANSISTOR NPN SI TO-39 PD=1W FT=800MHZ | 28480 | 1854-0247 |
| A1Q19 | 1854-1041 | 6 | 5 | TRANSISTOR-NPN | 28480 | |
| A1Q20 | 1854-0628 | 0 | 9 | TRANSISTOR NPN SI TO-92 PD=625MW | 04713 | MPS-H17 |

See introduction to this section for ordering information
*Indicates factory selected value

## Table 6-3. Replaceable Parts

| Reference Designation | HP Part Number | C D | Qty | Description | Mfr Code | Mfr Part Number |
|---|---|---|---|---|---|---|
| A1Q21 | 1854-0215 | 1 | | TRANSISTOR NPN SI PD=350MW FT=300MHZ | 04713 | 2N3904 |
| A1Q22 | 1855-0125 | 4 | 13 | TRANSISTOR-FET 2SK185 | 28480 | 1855-0125 |
| A1Q23 | 1854-0247 | 9 | | TRANSISTOR NPN SI TO-39 PD=1W FT=800MHZ | 28480 | 1854-0247 |
| A1Q24 | 1854-0247 | 9 | | TRANSISTOR NPN SI TO-39 PD=1W FT=800MHZ | 28480 | 1854-0247 |
| A1Q25 | 1854-0247 | 9 | | TRANSISTOR NPN SI TO-39 PD=1W FT=800MHZ | 28480 | 1854-0247 |
| A1Q26 | 1854-1041 | 6 | | TRANSISTOR-NPN | 28480 | |
| A1Q27 | 1853-0354 | 7 | | TRANSISTOR PNP SI TO-92 PD=350MW | 28480 | 1853-0354 |
| A1Q28 | 1855-0406 | 4 | 11 | TRANSISTOR J-FET P-CHAN D-MODE SI | 32293 | IT110 |
| A1Q29 | 1855-0406 | 4 | | TRANSISTOR J-FET P-CHAN D-MODE SI | 32293 | IT110 |
| A1Q30 | 1853-0354 | 7 | | TRANSISTOR PNP SI TO-92 PD=350MW | 28480 | 1853-0354 |
| A1Q31 | 1854-0628 | 0 | | TRANSISTOR NPN SI TO-92 PD=625MW | 04713 | MPS-H17 |
| A1Q32 | 1854-0215 | 1 | | TRANSISTOR NPN SI PD=350MW FT=300MHZ | 04713 | 2N3904 |
| A1Q33 | 1855-0125 | 4 | | TRANSISTOR-FET 2SK185 | 28480 | 1855-0125 |
| A1Q34 | 1855-0125 | 4 | | TRANSISTOR-FET 2SK185 | 28480 | 1855-0125 |
| A1Q35 | 1855-0125 | 4 | | TRANSISTOR-FET 2SK185 | 28480 | 1855-0125 |
| A1Q36 | 1855-0125 | 4 | | TRANSISTOR-FET 2SK185 | 28480 | 1855-0125 |
| A1Q37 | 1854-0628 | 0 | | TRANSISTOR NPN SI TO-92 PD=625MW | 04713 | MPS-H17 |
| A1Q38 | 1855-0125 | 4 | | TRANSISTOR-FET 2SK185 | 28480 | 1855-0125 |
| A1Q39 | 1853-0354 | 7 | | TRANSISTOR PNP SI TO-92 PD=350MW | 28480 | 1853-0354 |
| A1Q40 | 1854-0628 | 0 | | TRANSISTOR NPN SI TO-92 PD=625MW | 04713 | MPS-H17 |
| A1Q41 | 1854-0628 | 0 | | TRANSISTOR NPN SI TO-92 PD=625MW | 04713 | MPS-H17 |
| A1Q42 | 1854-0215 | 1 | | TRANSISTOR NPN SI PD=350MW FT=300MHZ | 04713 | 2N3904 |
| A1Q43 | 1854-0215 | 1 | | TRANSISTOR NPN SI PD=350MW FT=300MHZ | 04713 | 2N3904 |
| A1Q44 | 1855-0406 | 4 | | TRANSISTOR J-FET P-CHAN D-MODE SI | 32293 | IT110 |
| A1Q45 | 1855-0406 | 4 | | TRANSISTOR J-FET P-CHAN D-MODE SI | 32293 | IT110 |
| A1R1 | 0757-1094 | 9 | 22 | RESISTOR 1.47K 1% .125W F TC=0+-100 | 24546 | C4-1/8-T0-1471-F |
| A1R2 | 0698-3444 | 1 | 31 | RESISTOR 316 1% .125W F TC=0+-100 | 24546 | C4-1/8-T0-316R-F |
| A1R3 | 0698-3444 | 1 | | RESISTOR 316 1% .125W F TC=0+-100 | 24546 | C4-1/8-T0-316R-F |
| A1R4 | 0757-0279 | 0 | 32 | RESISTOR 3.16K 1% .125W F TC=0+-100 | 24546 | C4-1/8-T0-3161-F |
| A1R5 | 0757-0279 | 0 | | RESISTOR 3.16K 1% .125W F TC=0+-100 | 24546 | C4-1/8-T0-3161-F |
| A1R6 | 0757-0279 | 0 | | RESISTOR 3.16K 1% .125W F TC=0+-100 | 24546 | C4-1/8-T0-3161-F |
| A1R7 | 0757-0280 | 3 | 34 | RESISTOR 1K 1% .125W F TC=0+-100 | 24546 | C4-1/8-T0-1001-F |
| A1R8 | 0698-0082 | 7 | 17 | RESISTOR 464 1% .125W F TC=0+-100 | 24546 | C4-1/8-T0-4640-F |
| A1R9 | 0698-0082 | 7 | | RESISTOR 464 1% .125W F TC=0+-100 | 24546 | C4-1/8-T0-4640-F |
| A1R10 | 0757-0401 | 0 | 27 | RESISTOR 100 1% .125W F TC=0+-100 | 24546 | C4-1/8-T0-101-F |
| A1R11 | 0757-0401 | 0 | | RESISTOR 100 1% .125W F TC=0+-100 | 24546 | C4-1/8-T0-101-F |
| A1R12 | 0757-0397 | 3 | 13 | RESISTOR 68.1 1% .125W F TC=0+-100 | 24546 | C4-1/8-T0-68R1-F |
| A1R13 | 0757-1094 | 9 | | RESISTOR 1.47K 1% .125W F TC=0+-100 | 24546 | C4-1/8-T0-1471-F |
| A1R14 | 0699-0559 | 5 | 1 | RESISTOR-FXD 9K OHM .02% | 28480 | 0699-0559 |
| A1R15 | 0699-0561 | 9 | 1 | RESISTOR-FXD 101 OHM .01.2% | 28480 | 0699-0561 |
| A1R16 | 0699-0562 | 0 | 1 | RESISTOR-FXD 211.1 OHM .05% | 28480 | 0699-0562 |
| A1R17 | 0698-3428 | 1 | 12 | RESISTOR 14.7 1% .125W F TC=0+-100 | 03888 | PME55-1/8-T0-14R7-F |
| A1R18 | 0757-1094 | 9 | | RESISTOR 1.47K 1% .125W F TC=0+-100 | 24546 | C4-1/8-T0-1471-F |
| A1R19 | 0757-0401 | 0 | | RESISTOR 100 1% .125W F TC=0+-100 | 24546 | C4-1/8-T0-101-F |
| A1R20 | 0757-1094 | 9 | | RESISTOR 1.47K 1% .125W F TC=0+-100 | 24546 | C4-1/8-T0-1471-F |
| A1R21 | 0698-3160 | 8 | 7 | RESISTOR 31.6K 1% .125W F TC=0+-100 | 24546 | C4-1/8-T0-3162-F |
| A1R22 | 0698-3160 | 8 | | RESISTOR 31.6K 1% .125W F TC=0+-100 | 24546 | C4-1/8-T0-3162-F |
| A1R23 | 0698-3162 | 0 | 2 | RESISTOR 46.4K 1% .125W F TC=0+-100 | 24546 | C4-1/8-T0-4642-F |
| A1R24 | 0698-0082 | 7 | | RESISTOR 464 1% .125W F TC=0+-100 | 24546 | C4-1/8-T0-4640-F |
| A1R25 | 0757-0280 | 0 | | RESISTOR 1K 1% .125W F TC=0+-100 | | |
| A1R26 | 0698-3155 | 1 | 27 | RESISTOR 4.64K 1% .125W F TC=0+-100 | 24546 | C4-1/8-T0-4641-F |
| A1R27 | 0757-0439 | 4 | 13 | RESISTOR 6.81K 1% .125W F TC=0+-100 | 24546 | C4-1/8-T0-6811-F |
| A1R28 | 0757-0280 | 3 | | RESISTOR 1K 1% .125W F TC=0+-100 | 24546 | C4-1/8-T0-1001-F |
| A1R29 | 0698-2208 | 3 | 1 | RESISTOR:FXD 1K OHM 0.05% 1/8W MF | 28480 | 0698-2208 |
| A1R30 | 0699-0560 | 8 | 1 | RESISTOR-FXD 900 OHM .02% | 28480 | 0699-0560 |
| A1R31 | 0757-0401 | 0 | | RESISTOR 100 1% .125W F TC=0+-100 | 24546 | C4-1/8-T0-101-F |
| A1R32 | 0757-0401 | 0 | | RESISTOR 100 1% .125W F TC=0+-100 | 24546 | C4-1/8-T0-101-F |
| A1R33 | 0698-0082 | 7 | | RESISTOR 464 1% .125W F TC=0+-100 | 24546 | C4-1/8-T0-4640-F |
| A1R34 | 0757-0279 | 0 | | RESISTOR 3.16K 1% .125W F TC=0+-100 | 24546 | C4-1/8-T0-3161-F |
| A1R35 | 0757-1094 | 9 | | RESISTOR 1.47K 1% .125W F TC=0+-100 | 24546 | C4-1/8-T0-1471-F |
| A1R36 | 0698-3428 | 1 | | RESISTOR 14.7 1% .125W F TC=0+-100 | 03888 | PME55-1/8-T0-14R7-F |
| A1R37 | 0757-0279 | 0 | | RESISTOR 3.16K 1% .125W F TC=0+-100 | 24546 | C4-1/8-T0-3161-F |
| A1R38 | 0698-3428 | 1 | | RESISTOR 14.7 1% .125W F TC=0+-100 | 03888 | PME55-1/8-T0-14R7-F |
| A1R39 | 0757-0441 | 8 | 5 | RESISTOR 8.25K 1% .125W F TC=0+-100 | 24546 | C4-1/8-T0-8251-F |
| A1R40 | 0757-0421 | 4 | 10 | RESISTOR 825 1% .125W F TC=0+-100 | 24546 | C4-1/8-T0-825R-F |
| A1R41 | 0757-0442 | 9 | 34 | RESISTOR 10K 1% .125W F TC=0+-100 | 24546 | C4-1/8-T0-1002-F |
| A1R42 | 0757-0442 | 9 | | RESISTOR 10K 1% .125W F TC=0+-100 | 24546 | C4-1/8-T0-1002-F |
| A1R43 | 0757-0279 | 0 | | RESISTOR 3.16K 1% .125W F TC=0+-100 | 24546 | C4-1/8-T0-3161-F |
| A1R44 | 0757-0280 | 3 | | RESISTOR 1K 1% .125W F TC=0+-100 | 24546 | C4-1/8-T0-1001-F |
| A1R45 | 0757-0417 | 8 | 2 | RESISTOR 562 1% .125W F TC=0+-100 | 24546 | C4-1/8-T0-562R-F |
| A1R46 | 0757-0280 | 3 | | RESISTOR 1K 1% .125W F TC=0+-100 | 24546 | C4-1/8-T0-1001-F |
| A1R47 | 0698-3444 | 1 | | RESISTOR 316 1% .125W F TC=0+-100 | 24546 | C4-1/8-T0-316R-F |
| A1R48 | 0698-4383 | 9 | 1 | RESISTOR 53.6 1% .125W F TC=0+-100 | 24546 | C4-1/8-T0-53R6-F |
| A1R49 | 0698-3444 | 1 | | RESISTOR 316 1% .125W F TC=0+-100 | 24546 | C4-1/8-T0-316R-F |
| A1R50 | 0757-0279 | 0 | | RESISTOR 3.16K 1% .125W F TC=0+-100 | 24546 | C4-1/8-T0-3161-F |

See introduction to this section for ordering information
*Indicates factory selected value

## Table 6-3. Replaceable Parts

| Reference Designation | HP Part Number | C D | Qty | Description | Mfr Code | Mfr Part Number |
|---|---|---|---|---|---|---|
| A1R51 | 0757-0276 | 7 | 1 | RESISTOR 61.9 1% .125W F TC=0+-100 | 24546 | C4-1/8-T0-6192-F |
| A1R52 | 0698-3334 | 8 | 2 | RESISTOR 178 1% .5W F TC=0+-100 | 28480 | 0698-3334 |
| A1R53 | 0698-3334 | 8 | | RESISTOR 178 1% .5W F TC=0+-100 | 28480 | 0698-3334 |
| A1R54 | 0698-3266 | 9 | 17 | RESISTOR 237K 1% .125W F TC=0+-100 | 28480 | |
| A1R55 | 0757-1094 | 9 | | RESISTOR 1.47K 1% .125W F TC=0+-100 | 24546 | C4-1/8-T0-1471-F |
| A1R56 | 0757-0465 | 6 | 8 | RESISTOR 100K 1% .125W F TC=0+-100 | 24546 | C4-1/8-T0-1003-F |
| A1R57 | 0757-0465 | 6 | | RESISTOR 100K 1% .125W F TC=0+-100 | 24546 | C4-1/8-T0-1003-F |
| A1R58 | 0757-0419 | 0 | 15 | RESISTOR 681 1% .125W F TC=0+-100 | 24546 | C4-1/8-T0-681R-F |
| A1R59 | 0698-3156 | 2 | 11 | RESISTOR 14.7K 1% .125W F TC=0+-100 | 24546 | C4-1/8-T0-1472-F |
| A1R60 | 0698-3156 | 2 | | RESISTOR 14.7K 1% .125W F TC=0+-100 | 24546 | C4-1/8-T0-1472-F |
| A1R61 | 0698-3438 | 3 | 13 | RESISTOR 147 1% .125W F TC=0+-100 | 24546 | C4-1/8-T0-147R-F |
| A1R62 | 0757-0439 | 4 | | RESISTOR 6.81K 1% .125W F TC=0+-100 | 24546 | C4-1/8-T0-6811-F |
| A1R63 | 0698-3156 | 2 | | RESISTOR 14.7K 1% .125W F TC=0+-100 | 24546 | C4-1/8-T0-1472-F |
| A1R64 | 0698-3444 | 1 | | RESISTOR 316 1% .125W F TC=0+-100 | 24546 | C4-1/8-T0-316R-F |
| A1R65 | 0757-0395 | 1 | 8 | RESISTOR 56.2 1% .125W F TC=0+-100 | 24546 | C4-1/8-T0-56R2-F |
| A1R66 | 0698-4037 | 0 | 7 | RESISTOR 46.4 1% .125W F TC=0+-100 | 24546 | C4-1/8-T0-46R4-F |
| A1R67 | 0757-0279 | 0 | | RESISTOR 3.16K 1% .125W F TC=0+-100 | 24546 | C4-1/8-T0-3161-F |
| A1R68 | 0757-0465 | 6 | | RESISTOR 100K 1% .125W F TC=0+-100 | 24546 | C4-1/8-T0-1003-F |
| A1R69 | 0757-0395 | 1 | | RESISTOR 56.2 1% .125W F TC=0+-100 | 24546 | C4-1/8-T0-56R2-F |
| A1R70 | 0698-4037 | 0 | | RESISTOR 46.4 1% .125W F TC=0+-100 | 24546 | C4-1/8-T0-46R4-F |
| A1R71 | 0757-1094 | 9 | | RESISTOR 1.47K 1% .125W F TC=0+-100 | 24546 | C4-1/8-T0-1471-F |
| A1R72 | 0757-0465 | 6 | | RESISTOR 100K 1% .125W F TC=0+-100 | 24546 | C4-1/8-T0-1003-F |
| A1R73 | 0698-3266 | 9 | | RESISTOR 237K 1% .125W F TC=0+-100 | 28480 | |
| A1R74 | 0757-0419 | 0 | | RESISTOR 681 1% .125W F TC=0+-100 | 24546 | C4-1/8-T0-681R-F |
| A1R75 | 0698-3260 | 9 | | RESISTOR 464K 1% .125W F TC=0+-100 | 28480 | 0698-3260 |
| A1R76 | 0698-3260 | 9 | | RESISTOR 464K 1% .125W F TC=0+-100 | 28480 | 0698-3260 |
| A1R77 | 0757-0419 | 0 | | RESISTOR 681 1% .125W F TC=0+-100 | 24546 | C4-1/8-T0-681R-F |
| A1R78 | 0698-3443 | 0 | 3 | RESISTOR 287 1% .125W F TC=0+-100 | 24546 | C4-1/8-T0-287R-F |
| A1R79 | 0757-0442 | 9 | | RESISTOR 10K 1% .125W F TC=0+-100 | 24546 | C4-1/8-T0-1002-F |
| A1R80 | 0698-3428 | 1 | | RESISTOR 14.7 1% .125W F TC=0+-100 | 03888 | PME55-1/8-T0-14R7-F |
| A1R81 | 0698-3428 | 1 | | RESISTOR 14.7 1% .125W F TC=0+-100 | 03888 | PME55-1/8-T0-14R7-F |
| A1R82 | 0757-0465 | 6 | | RESISTOR 100K 1% .125W F TC=0+-100 | 24546 | C4-1/8-T0-1003-F |
| A1R83 | 0698-3428 | 1 | | RESISTOR 14.7 1% .125W F TC=0+-100 | 03888 | PME55-1/8-T0-14R7-F |
| A1R84 | 0698-3428 | 1 | | RESISTOR 14.7 1% .125W F TC=0+-100 | 03888 | PME55-1/8-T0-14R7-F |
| A1R85 | 0698-3428 | 1 | | RESISTOR 14.7 1% .125W F TC=0+-100 | 03888 | PME55-1/8-T0-14R7-F |
| A1R86 | 0698-3428 | 1 | | RESISTOR 14.7 1% .125W F TC=0+-100 | 03888 | PME55-1/8-T0-14R7-F |
| A1R87 | 0698-3443 | 0 | | RESISTOR 287 1% .125W F TC=0+-100 | 24546 | C4-1/8-T0-287R-F |
| A1R88 | 0698-3444 | 1 | | RESISTOR 316 1% .125W F TC=0+-100 | 24546 | C4-1/8-T0-316R-F |
| A1R89 | 0698-3156 | 2 | | RESISTOR 14.7K 1% .125W F TC=0+-100 | 24546 | C4-1/8-T0-1472-F |
| A1R90 | 0757-0442 | 2 | | RESISTOR 10K 1% .125W F TC=0+-100 | 24546 | C4-1/8-T0-1472-F |
| A1R91 | 0757-0279 | 0 | | RESISTOR 3.16K 1% .125W F TC=0+-100 | 24546 | C4-1/8-T0-3161-F |
| A1R92 | 0757-0279 | 0 | | RESISTOR 3.16K 1% .125W F TC=0+-100 | 24546 | C4-1/8-T0-3161-F |
| A1R93 | 0757-0442 | 2 | | RESISTOR 10K 1% .125W F TC=0+-100 | 24546 | C4-1/8-T0-1472-F |
| A1R94 | 0698-3156 | 2 | | RESISTOR 14.7K 1% .125W F TC=0+-100 | 24546 | C4-1/8-T0-1472-F |
| A1R95 | 0757-0199 | 3 | 15 | RESISTOR 21.5K 1% .125W F TC=0+-100 | 24546 | C4-1/8-T0-2152-F |
| A1R96 | 0698-3444 | 1 | | RESISTOR 316 1% .125W F TC=0+-100 | 24546 | C4-1/8-T0-316R-F |
| A1R97 | 0698-3428 | 1 | | RESISTOR 14.7 1% .125W F TC=0+-100 | 03888 | PME55-1/8-T0-14R7-F |
| A1R98 | 0698-3428 | 1 | | RESISTOR 14.7 1% .125W F TC=0+-100 | 03888 | PME55-1/8-T0-14R7-F |
| A1R99 | 0757-0439 | 4 | | RESISTOR 6.81K 1% .125W F TC=0+-100 | 24546 | C4-1/8-T0-6811-F |
| A1R100 | 0698-3260 | 9 | | RESISTOR 464K 1% .125W F TC=0+-100 | 28480 | 0698-3260 |
| A1R101 | 2100-3213 | 9 | 2 | RESISTOR-TRMR 200K 10% C TOP-ADJ 1-TRN | 28480 | 2100-3213 |
| A1R102 | 0757-0439 | 4 | | RESISTOR 6.81K 1% .125W F TC=0+-100 | 24546 | C4-1/8-T0-6811-F |
| A1R103 | 0698-3260 | 9 | | RESISTOR 464K 1% .125W F TC=0+-100 | 28480 | 0698-3260 |
| A1R104 | 2100-3213 | 9 | | RESISTOR-TRMR 200K 10% C TOP-ADJ 1-TRN | 28480 | 2100-3213 |
| A1R105 | 0757-0395 | 1 | | RESISTOR 56.2 1% .125W F TC=0+-100 | 24546 | C4-1/8-T0-56R2-F |
| A1R106 | 0757-0439 | 4 | | RESISTOR 6.81K 1% .125W F TC=0+-100 | 24546 | C4-1/8-T0-6811-F |
| A1R107 | 0698-3155 | 1 | | RESISTOR 4.64K 1% .125W F TC=0+-100 | 24546 | C4-1/8-T0-4641-F |
| A1R108 | 0698-0082 | 7 | | RESISTOR 464 1% .125W F TC=0+-100 | 24546 | C4-1/8-T0-4640-F |
| A1R109 | 0757-0397 | 3 | | RESISTOR 68.1 1% .125W F TC=0+-100 | 24546 | C4-1/8-T0-68R1-F |
| A1R110 | 0698-3438 | 3 | | RESISTOR 147 1% .125W F TC=0+-100 | 24546 | C4-1/8-T0-147R-F |
| A1R111 | 0698-3438 | 3 | | RESISTOR 147 1% .125W F TC=0+-100 | 24546 | C4-1/8-T0-147R-F |
| A1R112 | 0698-0082 | 7 | | RESISTOR 464 1% .125W F TC=0+-100 | 24546 | C4-1/8-T0-4640-F |
| A1R113 | 0698-0082 | 7 | | RESISTOR 464 1% .125W F TC=0+-100 | 24546 | C4-1/8-T0-4640-F |
| A1R114 | 0698-3438 | 3 | | RESISTOR 147 1% .125W F TC=0+-100 | 24546 | C4-1/8-T0-147R-F |
| A1R115 | 0698-3446 | 3 | 3 | RESISTOR 383 1% .125W F TC=0+-100 | 24546 | C4-1/8-T0-383R-F |
| A1R116 | 0757-1094 | 9 | | RESISTOR 1.47K 1% .125W F TC=0+-100 | 24546 | C4-1/8-T0-1471-F |
| A1R117 | 0698-3160 | 8 | | RESISTOR 31.6K 1% .125W F TC=0+-100 | 24546 | C4-1/8-T0-3162-F |
| A1R118 | 0757-0439 | 4 | | RESISTOR 6.81K 1% .125W F TC=0+-100 | 24546 | C4-1/8-T0-6811-F |
| A1R119 | 0757-0279 | 0 | | RESISTOR 3.16K 1% .125W F TC=0+-100 | 24546 | C4-1/8-T0-3161-F |
| A1R120 | 0698-3155 | 1 | | RESISTOR 4.64K 1% .125W F TC=0+-100 | 24546 | C4-1/8-T0-4641-F |
| A1R121 | 0698-0084 | 9 | 34 | RESISTOR 2.15K 1% .125W F TC=0+-100 | 24546 | C4-1/8-T0-2151-F |
| A1R122 | 0757-0180 | 2 | 9 | RESISTOR 31.6 1% .125W F TC=0+-100 | 28480 | 0757-0180 |
| A1R123 | 0698-3260 | 9 | | RESISTOR 464K 1% .125W F TC=0+-100 | 28480 | 0698-3260 |
| A1R124 | 0698-3260 | 9 | | RESISTOR 464K 1% .125W F TC=0+-100 | 28480 | 0698-3260 |
| A1R125 | 0757-0180 | 2 | | RESISTOR 31.6 1% .125W F TC=0+-100 | 28480 | 0757-0180 |

See introduction to this section for ordering information
*Indicates factory selected value

## Table 6-3. Replaceable Parts

| Reference Designation | HP Part Number | C D | Qty | Description | Mfr Code | Mfr Part Number |
|---|---|---|---|---|---|---|
| A1R126 | 0698-3260 | 9 | | RESISTOR 464K 1% .125W F TC=0+-100 | 28480 | 0698-3260 |
| A1R127 | 0698-3260 | 9 | | RESISTOR 464K 1% .125W F TC=0+-100 | 28480 | 0698-3260 |
| A1R128 | 0698-0084 | 9 | | RESISTOR 2.15K 1% .125W F TC=0+-100 | 24546 | C4-1/8-T0-2151-F |
| A1R129 | 0698-0084 | 9 | | RESISTOR 2.15K 1% .125W F TC=0+-100 | 24546 | C4-1/8-T0-2151-F |
| A1R130 | 0698-0084 | 9 | | RESISTOR 2.15K 1% .125W F TC=0+-100 | 24546 | C4-1/8-T0-2151-F |
| A1R131 | 0698-0084 | 9 | | RESISTOR 2.15K 1% .125W F TC=0+-100 | 24546 | C4-1/8-T0-2151-F |
| A1R132 | 0698-3444 | 1 | | RESISTOR 316 1% .125W F TC=0+-100 | 24546 | C4-1/8-T0-316R-F |
| A1R133 | 0757-0419 | 0 | | RESISTOR 681 1% .125W F TC=0+-100 | 24546 | C4-1/8-T0-681R-F |
| A1R134 | 0698-3444 | 1 | | RESISTOR 316 1% .125W F TC=0+-100 | 24546 | C4-1/8-T0-316R-F |
| A1R135 | 0757-0279 | 0 | | RESISTOR 3.16K 1% .125W F TC=0+-100 | 24546 | C4-1/8-T0-3161-F |
| A1R136 | 0757-0279 | 0 | | RESISTOR 3.16K 1% .125W F TC=0+-100 | 24546 | C4-1/8-T0-3161-F |
| A1R137 | 0757-0442 | 9 | | RESISTOR 10K 1% .125W F TC=0+-100 | 24546 | C4-1/8-T0-1002-F |
| A1R138 | 0698-3260 | 9 | | RESISTOR 464K 1% .125W F TC=0+-100 | 28480 | 0698-3260 |
| A1R139 | 0757-0439 | 4 | | RESISTOR 6.81K 1% .125W F TC=0+-100 | 24546 | C4-1/8-T0-6811-F |
| A1R140 | 0757-0280 | 3 | | RESISTOR 1K 1% .125W F TC=0+-100 | 24546 | C4-1/8-T0-1001-F |
| A1R141 | 0757-0279 | 0 | | RESISTOR 3.16K 1% .125W F TC=0+-100 | 24546 | C4-1/8-T0-3161-F |
| A1R142 | 0698-0084 | 9 | | RESISTOR 2.15K 1% .125W F TC=0+-100 | 24546 | C4-1/8-T0-2151-F |
| A1R143 | 0698-0084 | 9 | | RESISTOR 2.15K 1% .125W F TC=0+-100 | 24546 | C4-1/8-T0-2151-F |
| A1R144 | 0757-0180 | 2 | | RESISTOR 31.6 1% .125W F TC=0+-100 | 28480 | 0757-0180 |
| A1R145 | 0757-0421 | 4 | | RESISTOR 825 1% .125W F TC=0+-100 | 24546 | C4-1/8-T0-825R-F |
| A1R146 | 0698-0082 | 7 | | RESISTOR 464 1% .125W F TC=0+-100 | 24546 | C4-1/8-T0-4640-F |
| A1R147 | 0698-0082 | 7 | | RESISTOR 464 1% .125W F TC=0+-100 | 24546 | C4-1/8-T0-4640-F |
| A1R148 | 0757-0180 | 2 | | RESISTOR 31.6 1% .125W F TC=0+-100 | 28480 | 0757-0180 |
| A1R149 | 0698-0084 | 9 | | RESISTOR 2.15K 1% .125W F TC=0+-100 | 24546 | C4-1/8-T0-2151-F |
| A1R150 | 0757-0465 | 6 | | RESISTOR 100K 1% .125W F TC=0+-100 | 24546 | C4-1/8-T0-1003-F |
| A1R151 | 0698-3155 | 1 | | RESISTOR 4.64K 1% .125W F TC=0+-100 | 24546 | C4-1/8-T0-4641-F |
| A1R152 | 0698-0084 | 9 | | RESISTOR 2.15K 1% .125W F TC=0+-100 | 24546 | C4-1/8-T0-2151-F |
| A1R153 | 0757-1094 | 9 | | RESISTOR 1.47K 1% .125W F TC=0+-100 | 24546 | C4-1/8-T0-1471-F |
| A1R154 | 0698-3444 | 1 | | RESISTOR 316 1% .125W F TC=0+-100 | 24546 | C4-1/8-T0-316R-F |
| A1R155 | 0698-0082 | 7 | | RESISTOR 464 1% .125W F TC=0+-100 | 24546 | C4-1/8-T0-4640-F |
| A1R156 | 0757-0279 | 0 | | RESISTOR 3.16K 1% .125W F TC=0+-100 | 24546 | C4-1/8-T0-3161-F |
| A1R157 | 0757-0279 | 0 | | RESISTOR 3.16K 1% .125W F TC=0+-100 | 24546 | C4-1/8-T0-3161-F |
| A1R158 | 0757-0395 | 1 | | RESISTOR 56.2 1% .125W F TC=0+-100 | 24546 | C4-1/8-T0-56R2-F |
| A1R159 | 0757-0442 | 9 | | RESISTOR 10K 1% .125W F TC=0+-100 | 24546 | C4-1/8-T0-1002-F |
| A1R160 | 0757-1094 | 9 | | RESISTOR 1.47K 1% .125W F TC=0+-100 | 24546 | C4-1/8-T0-1471-F |
| A1R161 | 0698-3441 | 8 | 7 | RESISTOR 215 1% .125W F TC=0+-100 | 24546 | C4-1/8-T0-215R-F |
| A1R162 | 0757-0421 | 4 | | RESISTOR 825 1% .125W F TC=0+-100 | 24546 | C4-1/8-T0-825R-F |
| A1R163 | 0698-3155 | 1 | | RESISTOR 4.64K 1% .125W F TC=0+-100 | 24546 | C4-1/8-T0-4641-F |
| A1R164 | 0757-1094 | 9 | | RESISTOR 1.47K 1% .125W F TC=0+-100 | 24546 | C4-1/8-T0-1471-F |
| A1R165 | 0698-3444 | 1 | | RESISTOR 316 1% .125W F TC=0+-100 | 24546 | C4-1/8-T0-316R-F |
| A1R166 | 0698-3444 | 1 | | RESISTOR 316 1% .125W F TC=0+-100 | 24546 | C4-1/8-T0-316R-F |
| A1R167 | 0757-0280 | 3 | | RESISTOR 1K 1% .125W F TC=0+-100 | 24546 | C4-1/8-T0-1001-F |
| A1R168 | 0757-0280 | 3 | | RESISTOR 1K 1% .125W F TC=0+-100 | 24546 | C4-1/8-T0-1001-F |
| A1R169 | 0757-0401 | 0 | | RESISTOR 100 1% .125W F TC=0+-100 | 24546 | C4-1/8-T0-101-F |
| A1R170 | 0757-0279 | 0 | | RESISTOR 3.16K 1% .125W F TC=0+-100 | 24546 | C4-1/8-T0-3161-F |
| A1R171 | 0757-0465 | 6 | | RESISTOR 100K 1% .125W F TC=0+-100 | 24546 | C4-1/8-T0-1003-F |
| A1R172 | 0757-0279 | 0 | | RESISTOR 3.16K 1% .125W F TC=0+-100 | 24546 | C4-1/8-T0-3161-F |
| A1R173 | 0698-3155 | 1 | | RESISTOR 4.64K 1% .125W F TC=0+-100 | 24546 | C4-1/8-T0-4641-F |
| A1R174 | 0698-0084 | 9 | | RESISTOR 2.15K 1% .125W F TC=0+-100 | 24546 | C4-1/8-T0-2151-F |
| A1R175 | 0698-3155 | 1 | | RESISTOR 4.64K 1% .125W F TC=0+-100 | 24546 | C4-1/8-T0-4641-F |
| A1R176 | 0757-0419 | 0 | | RESISTOR 681 1% .125W F TC=0+-100 | 24546 | C4-1/8-T0-681R-F |
| A1R177 | 0757-1094 | 9 | | RESISTOR 1.47K 1% .125W F TC=0+-100 | 24546 | C4-1/8-T0-1471-F |
| A1R178 | 0757-0199 | 3 | | RESISTOR 21.5K 1% .125W F TC=0+-100 | 24546 | C4-1/8-T0-2152-F |
| A1R179 | 0757-0199 | 3 | | RESISTOR 21.5K 1% .125W F TC=0+-100 | 24546 | C4-1/8-T0-2152-F |
| A1R180 | 0757-1094 | 9 | | RESISTOR 1.47K 1% .125W F TC=0+-100 | 24546 | C4-1/8-T0-1471-F |
| A1R181 | 0698-0084 | 9 | | RESISTOR 2.15K 1% .125W F TC=0+-100 | 24546 | |
| A1R182 | 2100-3354 | | | RESISTOR-TRMR 50K 10% C SIDE-ADJ 1-TRN | | |
| A1R183 | 2100-3354 | | | RESISTOR-TRMR 50K 10% C SIDE-ADJ 1-TRN | | |
| A1R184 | 0683-3315 | | | RESISTOR 330Ω 5% .25W TC=0-400 | | |
| A1R185 | 0683-3315 | | | RESISTOR 330Ω 5% .25W TC=0-400 | | |
| A1R186 | 0683-3315 | | | RESISTOR 330Ω 5% .25W TC=0-400 | | |
| A1R187 | 0683-3315 | | | RESISTOR 330Ω 5% .25W TC=0-400 | | |
| A1S1 | 3101-0299 | | | SWITCH-SLIDE 4-SPST | 28480 | 3101-0299 |
| A1T1 | 9100-0822 | 8 | 1 | TRANSFORMER:PULSE(11307) | 28480 | 9100-0822 |
| A1T2 | 9100-0855 | 7 | 16 | TRANSFORMER-PULSE 113G1 | 28480 | 9100-0855 |
| A1T3 | 9100-0855 | 6 | 15 | TRANSFORMER-PULSE 113G1 | 28480 | 9100-0855 |
| A1T4 | 9100-0855 | 6 | | TRANSFORMER-PULSE 113G1 | 28480 | 9100-0855 |
| A1T5 | 9100-0822 | 7 | | TRANSFORMER:PULSE(11307) | 28480 | 9100-0822 |
| A1T6 | 9100-0822 | 7 | | TRANSFORMER:PULSE(11307) | 28480 | 9100-0822 |
| A1T7 | 9100-0822 | 7 | | TRANSFORMER:PULSE(11307) | 28480 | 9100-0822 |
| A1U1 | 1826-0139 | 9 | 3 | IC OP AMP GP DUAL 8-DIP-P PKG | 0192B | CA1458G |
| A1U2 | 1990-0577 | 6 | 2 | OPTO-ISOLATOR LED-PDIO/XSTR IF=50MA-MAX | 28480 | 5082-4355 |
| A1U3 | 1820-1433 | 6 | 11 | IC SHF-RGTR TTL LS R-S SERIAL-IN PRL-OUT | 01295 | SN74LS164N |
| A1U4 | 1820-1433 | 6 | | IC SHF-RGTR TTL LS R-S SERIAL-IN PRL-OUT | 01295 | SN74LS164N |
| A1U5 | 1990-0577 | 6 | | OPTO-ISOLATOR LED-PDIO/XSTR IF=50MA-MAX | 28480 | 5082-4355 |
| A1U6 | 1820-1433 | 6 | | IC SHF-RGTR TTL LS R-S SERIAL-IN PRL-OUT | 01295 | SN74LS164N |
| A1U7 | 1826-0188 | 1 | 1 | IC CONV 8-B-D/A 16-DIP-C | 04713 | MC1408L-6 |
| A1U8 | 1826-0933 | 4 | 15 | IC NJM78L12A V RGLTR TO-92 | | NJM78L12A |
| A1U9 | 1826-0282 | 3 | 13 | IC V RGLTR TO-92 | 04713 | MC79L12ACP |
| A1U10 | 1826-0043 | 4 | 7 | IC OP AMP GP TO-99 PKG | 0192B | CA307T |

See introduction to this section for ordering information
*Indicates factory selected value

## Table 6-3. Replaceable Parts

| Reference Designation | HP Part Number | C D | Qty | Description | Mfr Code | Mfr Part Number |
|---|---|---|---|---|---|---|
| A1U11 | 1826-0282 | 3 | | IC V RGLTR TO-92 | 04713 | MC79L12ACP |
| A1U12 | 1826-0035 | 4 | 8 | IC OP AMP LOW-DRIFT TO-99 PKG | 27014 | LM308AH |
| A1U13 | 1826-0043 | 4 | | IC OP AMP GP TO-99 PKG | 0192B | CA307T |
| A1U14 | 1826-0275 | 4 | | IC V RGLTR TO-92 | | µA78L12ACP |
| A1U15 | 1826-0282 | 3 | | IC V RGLTR TO-92 | 04713 | MC79L12ACP |
| A1U16 | 1826-0282 | 3 | | IC V RGLTR TO-92 | 04713 | MC79L12ACP |
| A1U17 | 1826-0275 | 4 | | IC V RGLTR TO-92 | | µA78L12ACP |
| A1U18 | 1826-0275 | 4 | | IC V RGLTR TO-92 | | µA78L12ACP |
| A1U19 | 1826-0282 | 3 | | IC V RGLTR TO-92 | 04713 | MC79L12ACP |
| A1U20 | 1826-0600 | 4 | 6 | IC OP AMP QUAD 14-DIP-P | 01295 | TL074CN |
| A1U21 | 1826-0275 | 4 | | IC V RGLTR TO-92 | | µA78L12ACP |
| A1U22 | 1826-0282 | 3 | | IC V RGLTR TO-92 | 04713 | MC79L12ACP |
| A1U23 | 1826-0035 | 4 | | IC OP AMP LOW-DRIFT TO-99 PKG | 27014 | LM308AH |
| A1U24 | 1826-0035 | 4 | | IC OP AMP LOW-DRIFT TO-99 PKG | 27014 | LM308AH |
| A1U25 | 1821-0001 | 4 | 3 | TRANSISTOR ARRAY 14-PIN PLSTC DIP | 0192B | CA3046 |
| A1U26 | 1826-0522 | 4 | | IC OP AMP QUAD 14-DIP-P PKG | 01295 | TL074CN |
| A1U27 | 1820-1433 | 6 | | IC SHF-RGTR TTL LS R-S SERIAL-IN PRL-OUT | 01295 | SN74LS164N |
| A1U28 | 1826-0522 | 4 | | IC OP AMP QUAD 14-DIP-P PKG | 01295 | TL074CN |
| A1U29 | 1820-1197 | 9 | 9 | IC GATE TTL LS NAND QUAD 2-INP | 01295 | SN74LS00N |
| A1U30 | 1820-1112 | 8 | 11 | IC FF TTL LS D-TYPE POS-EDGE-TRIG | 01295 | SN74LS74AN |
| A1U31 | 1820-1194 | 6 | 1 | IC CNTR TTL LS BIN UP/DOWN SYNCHRO | 01295 | SN74LS193N |
| A1U32 | 1820-0910 | 2 | 1 | IC ADDR TTL LS BIN FULL ADDR 4-BIT | 01295 | SN74LS83AN |
| | | | | A1 MISCELLANEOUS PARTS | | |
| | 0340-0220 | 8 | 116 | | 28480 | 0340-0220 |
| | 1205-0095 | 0 | 4 | HEAT SINK SGL TO-5/TO-39-CS | 30161 | 3225B |
| | 1258-0141 | 8 | 7 | JUMPER-REM | 28480 | 1258-0141 |
| | 3050-0082 | 8 | 45 | WASHER-FL NM NO. 4 .116-IN-ID .188-IN-OD | 28480 | 3050-0082 |
| | 0890-0006 | 3 | | TUBING-FLEX .204-ID PVC .02-WALL | 28480 | 0890-0006 |
| A2 | 04192-66502 | 0 | 1 | PHASE DETECTOR/A-D CONVERTER | 28480 | 04192-66502 |
| A2C1 | 0180-1085 | 5 | | CAPACITOR-FXD 4.7UF 16VDC TA | 28480 | 0180-1085 |
| A2C2 | 0180-1083 | 3 | | CAPACITOR-FXD 33UF 25VDC AL | 28480 | 0180-1083 |
| A2C3 | 0180-1083 | 3 | | CAPACITOR-FXD 33UF 25VDC AL | 28480 | 0180-1083 |
| A2C4 | 0180-1085 | 5 | | CAPACITOR-FXD 4.7UF 16VDC TA | 28480 | 0180-1085 |
| A2C5 | 0180-1050 | 4 | 9 | CAPACITOR-FXD 100UF 25VDC | 28480 | 0180-1050 |
| A2C6 | 0160-4835 | 8 | | CAPACITOR-FXD .1UF 10% 50VDC CER | | |
| A2C7 | 0160-4835 | 8 | | CAPACITOR-FXD .1UF 10% 50VDC CER | | |
| A2C8 | 0160-4835 | 8 | | CAPACITOR-FXD .1UF 10% 50VDC CER | | |
| A2C9 | 0160-4835 | 8 | | CAPACITOR-FXD .1UF 10% 50VDC CER | | |
| A2C10 | 0180-1085 | 5 | | CAPACITOR-FXD 4.7UF 16VDC TA | 28480 | 0180-1085 |
| A2C11 | 0180-1085 | 5 | | CAPACITOR-FXD 4.7UF 16VDC TA | 28480 | 0180-1085 |
| A2C12 | 0160-5139 | 6 | 1 | | 28480 | 0160-5139 |
| A2C13 | 0160-3456 | 6 | | CAPACITOR-FXD 1000PF +-10% 1KVDC CER | 28480 | 0160-3456 |
| A2C14 | 0160-3456 | 6 | | CAPACITOR-FXD 1000PF +-10% 1KVDC CER | 28480 | 0160-3456 |
| A2C15 | 0160-4835 | 8 | | CAPACITOR-FXD .1UF 10% 50VDC CER | | |
| A2C16 | 0160-4835 | 8 | | CAPACITOR-FXD .1UF 10% 50VDC CER | | |
| A2C17 | 0160-2257 | 3 | 3 | CAPACITOR-FXD 10PF +-5% 500VDC CER 0+-60 | 28480 | 0160-2257 |
| A2C18 | 0180-1085 | 5 | | CAPACITOR-FXD 4.7UF 16VDC TA | 28480 | 0180-1085 |
| A2C19 | 0180-1085 | 5 | | CAPACITOR-FXD 4.7UF 16VDC TA | 28480 | 0180-1085 |
| A2C20 | 0180-1085 | 5 | | CAPACITOR-FXD 4.7UF 16VDC TA | 28480 | 0180-1085 |
| A2C21 | 0180-1085 | 5 | | CAPACITOR-FXD 4.7UF 16VDC TA | 28480 | 0180-1085 |
| A2CR1 | 1902-3129 | 5 | 1 | DIODE-ZNR 7.5V 2% DO-35 PD=.4W TC=+.05% | 28480 | 1902-3129 |
| A2CR2 | 1901-0040 | 1 | 18 | DIODE-SWITCHING 30V 50MA 2NS DO-35 | 28480 | 1901-0040 |
| A2CR3 | 1901-0040 | 1 | | DIODE-SWITCHING 30V 50MA 2NS DO-35 | 28480 | 1901-0040 |
| A2CR4 | 1901-1011 | 8 | 1 | DIODE-ARRAY VF DIFF=5MV | 28480 | 1901-1011 |
| A2CR5 | 1901-0040 | 1 | | DIODE-SWITCHING 30V 50MA 2NS DO-35 | 28480 | 1901-0040 |
| A2CR6 | 1901-0040 | 1 | | DIODE-SWITCHING 30V 50MA 2NS DO-35 | 28480 | 1901-0040 |
| A2CR7 | 1902-3136 | | | DIODE-ZNR 8.06V 12.5MA DO-35 | | |
| A2J1 | 1251-0513 | 4 | 6 | CONNECTOR 5-PIN M POST TYPE | 28480 | 1251-0513 |
| A2J2 | 1200-0541 | 1 | 19 | SOCKET-IC 24-CONT DIP DIP-SLDR | 28480 | 1200-0541 |
| A2J3 | 1250-0257 | 1 | | CONNECTOR-RF SMB M PC 50-OHM | 28480 | 1250-0257 |
| A2J4 | 1200-0607 | 0 | | SOCKET-IC 16-CONT DIP DIP-SLDR | 28480 | 1200-0607 |
| A2J5 | 1251-6527 | 2 | 3 | CONNECTOR 6-PIN M METRIC POST TYPE | 28480 | 1251-6527 |
| A2L1 | 9100-1788 | 6 | 5 | CHOKE-WIDE BAND ZMAX=680 OHM@ 180 MHZ | 02114 | VK200 20/48 |
| A2L2 | 9140-0179 | 1 | 6 | INDUCTOR RF-CH-MLD 22UH 10% .166DX.385LG | 28480 | 9140-0179 |
| A2L3 | 9140-0179 | 1 | | INDUCTOR RF-CH-MLD 22UH 10% .166DX.385LG | 28480 | 9140-0179 |
| A2Q1 | 1855-0406 | 4 | | TRANSISTOR J-FET P-CHAN D-MODE SI | 32293 | IT110 |
| A2Q2 | 1855-0406 | 4 | | TRANSISTOR J-FET P-CHAN D-MODE SI | 32293 | IT110 |
| A2Q3 | 1855-0406 | 4 | | TRANSISTOR J-FET P-CHAN D-MODE SI | 32293 | IT110 |
| A2Q4 | 1855-0406 | 4 | | TRANSISTOR J-FET P-CHAN D-MODE SI | 32293 | IT110 |
| A2Q5 | 1855-0406 | 4 | | TRANSISTOR J-FET P-CHAN D-MODE SI | 32293 | IT110 |
| A2Q6 | 1855-0406 | 4 | | TRANSISTOR J-FET P-CHAN D-MODE SI | 32293 | IT110 |
| A2Q7 | 1855-0406 | 4 | | TRANSISTOR J-FET P-CHAN D-MODE SI | 32293 | IT110 |

See introduction to this section for ordering information
*Indicates factory selected value

## Table 6-3. Replaceable Parts

| Reference Designation | HP Part Number | C D | Qty | Description | Mfr Code | Mfr Part Number |
|---|---|---|---|---|---|---|
| A2R1 | 0683-1525 | 4 | 12 | RESISTOR 1.5K 5% .25W FC TC=-400/+700 | 01121 | CB1525 |
| A2R2 | 0683-6845 | 1 | 1 | RESISTOR 680K 5% .25W FC TC=-800/+900 | 01121 | CB6845 |
| A2R3 | 0683-1525 | 4 | | RESISTOR 1.5K 5% .25W FC TC=-400/+700 | 01121 | CB1525 |
| A2R4 | 0698-3155 | 1 | | RESISTOR 4.64K 1% .125W F TC=0+-100 | 24546 | C4-1/8-T0-4641-F |
| A2R5 | 0683-1525 | 4 | | RESISTOR 1.5K 5% .25W FC TC=-400/+700 | 01121 | CB1525 |
| A2R6 | 0683-1525 | 4 | | RESISTOR 1.5K 5% .25W FC TC=-400/+700 | 01121 | CB1525 |
| A2R7 | 0683-1525 | 4 | | RESISTOR 1.5K 5% .25W FC TC=-400/+700 | 01121 | CB1525 |
| A2R8 | 0683-4725 | 2 | 27 | RESISTOR 4.7K 5% .25W FC TC=-400/+700 | 01121 | CB4725 |
| A2R9 | 0683-4725 | 2 | | RESISTOR 4.7K 5% .25W FC TC=-400/+700 | 01121 | CB4725 |
| A2R10 | 0683-1525 | 4 | | RESISTOR 1.5K 5% .25W FC TC=-400/+700 | 01121 | CB1525 |
| A2R11 | 0683-4725 | 2 | | RESISTOR 4.7K 5% .25W FC TC=-400/+700 | 01121 | CB4725 |
| A2R12 | 0683-4725 | 2 | | RESISTOR 4.7K 5% .25W FC TC=-400/+700 | 01121 | CB4725 |
| A2R13 | 0698-3157 | 3 | 3 | RESISTOR 19.6K 1% .125W F TC=0+-100 | 24546 | C4-1/8-T0-1962-F |
| A2R14 | 0698-3155 | 1 | | RESISTOR 4.64K 1% .125W F TC=0+-100 | 24546 | C4-1/8-T0-4641-F |
| A2R15 | 0698-3155 | 1 | | RESISTOR 4.64K 1% .125W F TC=0+-100 | 24546 | C4-1/8-T0-4641-F |
| A2R16 | 0698-0084 | 9 | | RESISTOR 2.15K 1% .125W F TC=0+-100 | 24546 | C4-1/8-T0-2151-F |
| A2R17 | 0757-0442 | 9 | | RESISTOR 10K 1% .125W F TC=0+-100 | 24546 | C4-1/8-T0-1002-F |
| A2R18 | 0757-0199 | 3 | | RESISTOR 21.5K 1% .125W F TC=0+-100 | 24546 | C4-1/8-T0-2152-F |
| A2R19 | 0757-0441 | 8 | | RESISTOR 8.25K 1% .125W F TC=0+-100 | 24546 | C4-1/8-T0-8251-F |
| A2R20 | 0698-8649 | 8 | 1 | RESISTOR 1.28M .1% .25W F TC=0+-25 | 28480 | 0698-8649 |
| A2R21 | 0698-2214 | 1 | 1 | RESISTOR:FXD 10.0K OHM 0.05% 1/8W MF | 28480 | 0698-2214 |
| A2R22 | 0698-0084 | 9 | | RESISTOR 2.15K 1% .125W F TC=0+-100 | 24546 | C4-1/8-T0-2151-F |
| A2R23 | 0757-0465 | 6 | | RESISTOR 100K 1% .125W F TC=0+-100 | 24546 | C4-1/8-T0-1003-F |
| A2R24 | 0698-3155 | 1 | | RESISTOR 4.64K 1% .125W F TC=0+-100 | 24546 | C4-1/8-T0-4641-F |
| A2R25 | 0698-3153 | 9 | 6 | RESISTOR 3.83K 1% .125W F TC=0+-100 | 24546 | C4-1/8-T0-3831-F |
| A2R26 | 0698-3153 | 9 | | RESISTOR 3.83K 1% .125W F TC=0+-100 | 24546 | C4-1/8-T0-3831-F |
| A2R27 | 0683-2225 | 3 | 14 | RESISTOR 2.2K 5% .25W FC TC=-400/+700 | 01121 | CB2225 |
| A2R28 | 0683-2225 | 3 | | RESISTOR 2.2K 5% .25W FC TC=-400/+700 | 01121 | CB2225 |
| A2R29 | 0698-3155 | 1 | | RESISTOR 4.64K 1% .125W F TC=0+-100 | 24546 | C4-1/8-T0-4641-F |
| A2R30 | 0757-0199 | 3 | | RESISTOR 21.5K 1% .125W F TC=0+-100 | 24546 | C4-1/8-T0-2152-F |
| A2R31 | 0757-0199 | 3 | | RESISTOR 21.5K 1% .125W F TC=0+-100 | 24546 | C4-1/8-T0-2152-F |
| A2R32 | 0757-0442 | 9 | | RESISTOR 10K 1% .125W F TC=0+-100 | 24546 | C4-1/8-T0-1002-F |
| A2R33 | 0757-0442 | 9 | | RESISTOR 10K 1% .125W F TC=0+-100 | 24546 | C4-1/8-T0-1002-F |
| A2R34 | 0757-0280 | 3 | | RESISTOR 1K 1% .125W F TC=0+-100 | 24546 | C4-1/8-T0-1001-F |
| A2R35 | 0757-0280 | 3 | | RESISTOR 1K 1% .125W F TC=0+-100 | 24546 | C4-1/8-T0-1001-F |
| A2R36 | 0757-0442 | 9 | | RESISTOR 10K 1% .125W F TC=0+-100 | 24546 | C4-1/8-T0-1002-F |
| A2R37 | 0757-0442 | 9 | | RESISTOR 10K 1% .125W F TC=0+-100 | 24546 | C4-1/8-T0-1002-F |
| A2R38 | 0757-0280 | 3 | | RESISTOR 1K 1% .125W F TC=0+-100 | 24546 | C4-1/8-T0-1001-F |
| A2R39 | 0757-0280 | 3 | | RESISTOR 1K 1% .125W F TC=0+-100 | 24546 | C4-1/8-T0-1001-F |
| A2R40 | 0757-0280 | 3 | | RESISTOR 1K 1% .125W F TC=0+-100 | 24546 | C4-1/8-T0-1001-F |
| A2R41 | 0757-0280 | 3 | | RESISTOR 1K 1% .125W F TC=0+-100 | 24546 | C4-1/8-T0-1001-F |
| A2R42 | 0757-0280 | 3 | | RESISTOR 1K 1% .125W F TC=0+-100 | 24546 | C4-1/8-T0-1001-F |
| A2R43 | 0683-3315 | | | RESISTOR 330Ω 5% .25W TC=0-400 | | |
| A2U1 | 1826-0282 | 3 | | IC V RGLTR TO-92 | 04713 | MC79L12ACP |
| A2U2 | 1826-0275 | 4 | | IC V RGLTR TO-92 | | µA78L12ACP |
| A2U3 | 1826-0522 | 4 | | IC OP AMP QUAD 14-DIP-P PKG | 01295 | TL074CN |
| A2U4 | 1826-0138 | 8 | 6 | IC COMPARATOR GP QUAD 14-DIP-P PKG | 01295 | LM339N |
| A2U5 | 1826-0013 | 8 | 1 | IC OP AMP LOW-NOISE TO-99 PKG | 06665 | SSS741CJ |
| A2U6 | 1826-0081 | 0 | 1 | IC OP AMP WB TO-99 PKG | 27014 | LM318H |
| A2U7 | 1826-0043 | 4 | | IC OP AMP GP TO-99 PKG | 0192B | CA307T |
| A2U8 | 1820-1112 | 8 | | IC FF TTL LS D-TYPE POS-EDGE-TRIG | 01295 | SN74LS74AN |
| A2U9 | 1820-1197 | 9 | | IC GATE TTL LS NAND QUAD 2-INP | 01295 | SN74LS00N |
| A2U10 | 1820-1112 | 8 | | IC FF TTL LS D-TYPE POS-EDGE-TRIG | 01295 | SN74LS74AN |
| A2U11 | 1820-1469 | 8 | 1 | IC FF TTL LS J-K NEG-EDGE-TRIG CLEAR | 01295 | SN74LS107AN |
| | | | | A2 MISCELLANEOUS PARTS | | |
| | 0340-0220 | 8 | | | 28480 | 0340-0220 |
| | 3050-0082 | 8 | | WASHER-FL NM NO. 4 .116-IN-ID .188-IN-OD | 28480 | 3050-0082 |
| A3 | 04192-66503 | 1 | 1 | REFERENCE FREQUENCY GENERATOR BOARD ASSEMBLY (NOT INCLUDING THE SHIELD CASES) | 28480 | 04192-66503 |
| A3C1 | 0160-4835 | 8 | | CAPACITOR-FXD .1UF 10% 50VDC CER | | |
| A3C2 | 0160-4835 | 8 | | CAPACITOR-FXD .1UF 10% 50VDC CER | | |
| A3C3 | 0180-1085 | 5 | | CAPACITOR-FXD 4.7UF 16VDC TA | 28480 | 0180-1085 |
| A3C4 | 0160-3847 | 9 | | CAPACITOR-FXD .01UF +100-0% 50VDC CER | 28480 | 0160-3847 |
| A3C5 | 0160-3847 | 9 | | CAPACITOR-FXD .01UF +100-0% 50VDC CER | 28480 | 0160-3847 |
| A3C6 | 0160-4835 | 8 | | CAPACITOR-FXD .1UF 10% 50VDC CER | | |
| A3C7 | 0160-3847 | 9 | | CAPACITOR-FXD .01UF +100-0% 50VDC CER | 28480 | 0160-3847 |
| A3C8 | 0180-0100 | 3 | 2 | CAPACITOR-FXD 4.7UF+-10% 35VDC TA | 56289 | 150D475X9035B2 |
| A3C9 | 0180-1050 | 4 | | CAPACITOR-FXD 100UF 25VDC | 28480 | 0180-1050 |
| A3C10 | 0180-0100 | 3 | | CAPACITOR-FXD 4.7UF+-10% 35VDC TA | 56289 | 150D475X9035B2 |
| A3C11 | 0160-3847 | 9 | | CAPACITOR-FXD .01UF +100-0% 50VDC CER | 28480 | 0160-3847 |
| A3C12 | 0180-2207 | 5 | 3 | CAPACITOR-FXD 100UF+-10% 10VDC TA | 56289 | 150D107X9010R2 |
| A3C13 | 0160-0134 | 1 | 4 | CAPACITOR-FXD 220PF +-5% 300VDC MICA | 28480 | 0160-0134 |
| A3C14 | 0180-2951 | 6 | 3 | CAPACITOR-FXD 33UF+-20% 16VDC AL | 28480 | 0180-2951 |
| A3C15 | 0180-2207 | 5 | | CAPACITOR-FXD 100UF+-10% 10VDC TA | 56289 | 150D107X9010R2 |

See introduction to this section for ordering information
*Indicates factory selected value

## Table 6-3. Replaceable Parts

| Reference Designation | HP Part Number | C D | Qty | Description | Mfr Code | Mfr Part Number |
|---|---|---|---|---|---|---|
| A3C16 | 0180-1050 | 4 | | CAPACITOR-FXD 100UF 25VDC | 28480 | 0180-1050 |
| A3C17 | 0160-3847 | 9 | | CAPACITOR-FXD .01UF +100-0% 50VDC CER | 28480 | 0160-3847 |
| A3C18 | 0160-3847 | 9 | | CAPACITOR-FXD .01UF +100-0% 50VDC CER | 28480 | 0160-3847 |
| A3C19 | 0160-0127 | 2 | | CAPACITOR-FXD 1UF +-20% 25VDC CER | 28480 | 0160-0127 |
| A3C20 | 0160-4835 | 8 | | CAPACITOR-FXD .1UF 10% 50VDC CER | | |
| A3C21 | 0160-4835 | 8 | | CAPACITOR-FXD .1UF 10% 50VDC CER | | |
| A3C22 | 0160-2264 | 2 | 2 | CAPACITOR-FXD 20PF +-5% 500VDC CER 0+-30 | 28480 | 0160-2264 |
| A3C23 | 0160-3847 | 9 | | CAPACITOR-FXD .01UF +100-0% 50VDC CER | 28480 | 0160-3847 |
| A3C24 | 0160-2307 | 4 | 7 | CAPACITOR-FXD 47PF +-5% 300VDC MICA | 28480 | 0160-2307 |
| A3C25 | 0140-0191 | 8 | | CAPACITOR-FXD 56PF +-5% 300VDC MICA | 72136 | DM15E560J0300WV1CR |
| A3C26 | 0160-0134 | 1 | | CAPACITOR-FXD 220PF +-5% 300VDC MICA | 28480 | 0160-0134 |
| A3C27 | 0160-0134 | 1 | | CAPACITOR-FXD 220PF +-5% 300VDC MICA | 28480 | 0160-0134 |
| A3C28 | 0160-3847 | 9 | | CAPACITOR-FXD .01UF +100-0% 50VDC CER | 28480 | 0160-3847 |
| A3C29 | 0160-3847 | 9 | | CAPACITOR-FXD .01UF +100-0% 50VDC CER | 28480 | 0160-3847 |
| A3C30 | 0160-3456 | 6 | | CAPACITOR-FXD 1000PF +-10% 1KVDC CER | 28480 | 0160-3456 |
| A3C31 | 0160-3456 | 6 | | CAPACITOR-FXD 1000PF +-10% 1KVDC CER | 28480 | 0160-3456 |
| A3C32 | 0160-4835 | 8 | | CAPACITOR-FXD .1UF 10% 50VDC CER | | |
| A3C33 | 0160-0127 | 2 | | CAPACITOR-FXD 1UF +-20% 25VDC CER | 28480 | 0160-0127 |
| A3C34 | 0160-0160 | 3 | 1 | CAPACITOR-FXD 8200PF +-10% 200VDC POLYE | 28480 | 0160-0160 |
| A3C35 | 0160-0134 | 1 | | CAPACITOR-FXD 220PF +-5% 300VDC MICA | 28480 | 0160-0134 |
| A3C36 | 0160-0127 | 2 | | CAPACITOR-FXD 1UF +-20% 25VDC CER | 28480 | 0160-0127 |
| A3C37 | 0160-3847 | 9 | | CAPACITOR-FXD .01UF +100-0% 50VDC CER | 28480 | 0160-3847 |
| A3C38 | 0160-3847 | 9 | | CAPACITOR-FXD .01UF +100-0% 50VDC CER | 28480 | 0160-3847 |
| A3C39 | 0160-0194 | 3 | 1 | CAPACITOR-FXD .015UF +-10% 200VDC POLYE | 28480 | 0160-0194 |
| A3C40 | 0160-4835 | 8 | | CAPACITOR-FXD .1UF 10% 50VDC CER | | |
| A3C41 | 0160-4835 | 8 | | CAPACITOR-FXD .1UF 10% 50VDC CER | | |
| A3C42 | 0180-1085 | 5 | | CAPACITOR-FXD 4.7UF 16VDC TA | 28480 | 0180-1085 |
| A3C43 | 0160-3847 | 9 | | CAPACITOR-FXD .01UF +100-0% 50VDC CER | 28480 | 0160-3847 |
| A3C44 | 0160-2307 | 4 | | CAPACITOR-FXD 47PF +-5% 300VDC MICA | 28480 | 0160-2307 |
| A3C45 | 0160-2253 | 9 | 6 | CAPACITOR-FXD 6.8PF +-.25PF 500VDC CER | 28480 | 0160-2253 |
| A3C46 | 0160-3847 | 9 | | CAPACITOR-FXD .01UF +100-0% 50VDC CER | 28480 | 0160-3847 |
| A3C47 | 0180-2207 | 5 | | CAPACITOR-FXD 100UF+-10% 10VDC TA | 56289 | 150D107X9010R2 |
| A3C48 | 0160-3456 | 6 | | CAPACITOR-FXD 1000PF +-10% 1KVDC CER | 28480 | 0160-3456 |
| A3C49 | 0160-3847 | 9 | | CAPACITOR-FXD .01UF +100-0% 50VDC CER | 28480 | 0160-3847 |
| A3C50 | 0160-3847 | 9 | | CAPACITOR-FXD .01UF +100-0% 50VDC CER | 28480 | 0160-3847 |
| A3C51 | 0160-4835 | 8 | | CAPACITOR-FXD .1UF 10% 50VDC CER | | |
| A3C52 | 0180-1085 | 5 | | CAPACITOR-FXD 4.7UF 16VDC TA | 28480 | 0180-1085 |
| A3C53 | 0160-3847 | 9 | | CAPACITOR-FXD .01UF +100-0% 50VDC CER | 28480 | 0160-3847 |
| A3C54 | 0160-3847 | 9 | | CAPACITOR-FXD .01UF +100-0% 50VDC CER | 28480 | 0160-3847 |
| A3C55 | 0160-3456 | 6 | | CAPACITOR-FXD 1000PF +-10% 1KVDC CER | 28480 | 0160-3456 |
| A3C56 | 0160-2264 | 2 | | CAPACITOR-FXD 20PF +-5% 500VDC CER 0+-30 | 28480 | 0160-2264 |
| A3C57 | 0160-3847 | 9 | | CAPACITOR-FXD .01UF +100-0% 50VDC CER | 28480 | 0160-3847 |
| A3C58 | 0160-3847 | 9 | | CAPACITOR-FXD .01UF +100-0% 50VDC CER | 28480 | 0160-3847 |
| A3C59 | 0160-3456 | 6 | | CAPACITOR-FXD 1000PF +-10% 1KVDC CER | 28480 | 0160-3456 |
| A3C60 | 0160-3847 | 9 | | CAPACITOR-FXD .01UF +100-0% 50VDC CER | 28480 | 0160-3847 |
| A3C61 | 0160-3456 | 6 | | CAPACITOR-FXD 1000PF +-10% 1KVDC CER | 28480 | 0160-3456 |
| A3C62 | 0160-2261 | 9 | 1 | CAPACITOR-FXD 15PF +-5% 500VDC CER 0+-30 | 28480 | 0160-2261 |
| A3C63 | 0160-2150 | 5 | | CAPACITOR-FXD 33PF +-5% 300VDC MICA | 28480 | 0160-2150 |
| A3C64 | 0180-2951 | 6 | | CAPACITOR-FXD 33UF+-20% 16VDC AL | 28480 | 0180-2951 |
| A3C65 | 0160-3847 | 9 | | CAPACITOR-FXD .01UF +100-0% 50VDC CER | 28480 | 0160-3847 |
| A3C66 | 0180-1085 | 5 | | CAPACITOR-FXD 4.7UF 16VDC TA | 28480 | 0180-1085 |
| A3C67 | 0160-4835 | 8 | | CAPACITOR-FXD .1UF 10% 50VDC CER | | |
| A3C68 | 0160-2253 | 9 | | CAPACITOR-FXD 6.8PF +-.25PF 500VDC CER | 28480 | 0160-2253 |
| A3C69 | 0160-2263 | 1 | 1 | CAPACITOR-FXD 18PF +-5% 500VDC CER 0+-30 | 28480 | 0160-2263 |
| A3C70 | 0160-3456 | 6 | | CAPACITOR-FXD 1000PF +-10% 1KVDC CER | 28480 | 0160-3456 |
| A3C71 | 0160-3847 | 9 | | CAPACITOR-FXD .01UF +100-0% 50VDC CER | 28480 | 0160-3847 |
| A3C72 | 0160-2204 | 0 | | CAPACITOR-FXD 100PF +-5% 300VDC MICA | 28480 | 0160-2204 |
| A3C73 | 0160-3456 | 6 | | CAPACITOR-FXD 1000PF +-10% 1KVDC CER | 28480 | 0160-3456 |
| A3C74 | 0160-2307 | 4 | | CAPACITOR-FXD 47PF +-5% 300VDC MICA | 28480 | 0160-2307 |
| A3C75 | 0160-2150 | 5 | | CAPACITOR-FXD 33PF +-5% 300VDC MICA | 28480 | 0160-2150 |
| A3C76 | 0160-3847 | 9 | | CAPACITOR-FXD .01UF +100-0% 50VDC CER | 28480 | 0160-3847 |
| A3C77 | 0160-0127 | 9 | | CAPACITOR-FXD 1UF +-20% 25VDC CER | 28480 | 0160-3847 |
| A3C78 | 0180-2951 | 6 | | CAPACITOR-FXD 33UF+-20% 16VDC AL | 28480 | 0180-2951 |
| A3C79 | 0160-3847 | 9 | | CAPACITOR-FXD .01UF +100-0% 50VDC CER | 28480 | 0160-3847 |
| A3C80 | 0180-1050 | | | CAPACITOR-FXD 100UF -10+50% | | |
| A3CR1 | 1901-0518 | 8 | 8 | DIODE-SM SIG SCHOTTKY | 28480 | 1901-0518 |
| A3CR2 | 1901-0518 | 8 | | DIODE-SM SIG SCHOTTKY | 28480 | 1901-0518 |
| A3CR3 | 1901-0040 | 1 | | DIODE-SWITCHING 30V 50MA 2NS DO-35 | 28480 | 1901-0040 |
| A3CR4 | 1901-0040 | 1 | | DIODE-SWITCHING 30V 50MA 2NS DO-35 | 28480 | 1901-0040 |
| A3CR5 | 1901-0040 | 1 | | DIODE-SWITCHING 30V 50MA 2NS DO-35 | 28480 | 1901-0040 |
| A3CR6 | 1901-0376 | 6 | 8 | DIODE-GEN PRP 35V 50MA DO-35 | 28480 | 1901-0376 |
| A3CR7 | 1901-0376 | 6 | | DIODE-GEN PRP 35V 50MA DO-35 | 28480 | 1901-0376 |
| A3CR8 | 1902-3059 | 0 | 6 | DIODE-ZNR 3.83V 5% DO-35 PD=.4W | 28480 | 1902-3059 |
| A3CR9 | 0122-0109 | 0 | 2 | DIODE-VVC | 28480 | 0122-0109 |
| A3CR10 | 0122-0109 | 0 | | DIODE-VVC | 28480 | 0122-0109 |

See introduction to this section for ordering information
*Indicates factory selected value

## Table 6-3. Replaceable Parts

| Reference Designation | HP Part Number | C D | Qty | Description | Mfr Code | Mfr Part Number |
|---|---|---|---|---|---|---|
| A3J1 | 1251-0513 | 4 | | CONNECTOR 5-PIN M POST TYPE | 28480 | 1251-0513 |
| A3J2 | 1251-6527 | 2 | | CONNECTOR 6-PIN M METRIC POST TYPE | 28480 | 1251-6527 |
| A3J3 | 1250-0257 | 1 | | CONNECTOR-RF SMB M PC 50-OHM | 28480 | 1250-0257 |
| A3J4 | 1250-0257 | 1 | | CONNECTOR-RF SMB M PC 50-OHM | 28480 | 1250-0257 |
| A3J5 | 1250-0257 | 1 | | CONNECTOR-RF SMB M PC 50-OHM | 28480 | 1250-0257 |
| A3J6 | 1250-0257 | 1 | | CONNECTOR-RF SMB M PC 50-OHM | 28480 | 1250-0257 |
| A3J7 | 1250-0257 | 1 | | CONNECTOR-RF SMB M PC 50-OHM | 28480 | 1250-0257 |
| A3J8 | 1250-0257 | 1 | | CONNECTOR-RF SMB M PC 50-OHM | 28480 | 1250-0257 |
| A3J9 | 1250-0257 | 1 | | CONNECTOR-RF SMB M PC 50-OHM | 28480 | 1250-0257 |
| A3J10 | 1250-0257 | 1 | | CONNECTOR-RF SMB M PC 50-OHM | 28480 | 1250-0257 |
| A3L1 | 9100-1788 | 6 | | CHOKE-WIDE BAND ZMAX=680 OHM@ 180 MHZ | 02114 | VK200 20/4B |
| A3L2 | 9140-0114 | 4 | | INDUCTOR RF-CH-MLD 10UH 10% .166DX.385LG | 28480 | 9140-0114 |
| A3L3 | 9140-0179 | 1 | | INDUCTOR RF-CH-MLD 22UH 10% .166DX.385LG | 28480 | 9140-0179 |
| A3L4 | 9140-0179 | 1 | | INDUCTOR RF-CH-MLD 22UH 10% .166DX.385LG | 28480 | 9140-0179 |
| A3L5 | 9140-0098 | 3 | | INDUCTOR RF-CH-MLD 2.2UH 10% | 28480 | 9140-0098 |
| A3L6 | 9140-0179 | 1 | | INDUCTOR RF-CH-MLD 22UH 10% .166DX.385LG | 28480 | 9140-0179 |
| A3L7 | 9140-0179 | 1 | | INDUCTOR RF-CH-MLD 22UH 10% .166DX.385LG | 28480 | 9140-0179 |
| A3L8 | 9100-1661 | 4 | 2 | INDUCTOR RF-CH-MLD 2.2MH 5% .23DX.57LG | 28480 | 9100-1661 |
| A3L9 | 9100-1661 | 4 | | INDUCTOR RF-CH-MLD 2.2MH 5% .23DX.57LG | 28480 | 9100-1661 |
| A3L10 | 9100-1618 | 1 | 2 | INDUCTOR RF-CH-MLD 5.6UH 10% | 28480 | 9100-1618 |
| A3L11 | 9100-1618 | 1 | | INDUCTOR RF-CH-MLD 5.6UH 10% | 28480 | 9100-1618 |
| A3L12 | 9140-0466 | 9 | 2 | COIL-VAR 475NH-525NH Q=80 PC-MTG | 28480 | 9140-0466 |
| A3L13 | 9100-2255 | 4 | 1 | INDUCTOR RF-CH-MLD 470NH 10% .105DX.26LG | 28480 | 9100-2255 |
| A3L14 | 9140-0158 | 6 | | INDUCTOR RF-CH-MLD 1UH 10% .105DX.26LG | 28480 | 9140-0158 |
| A3L15 | 9140-0158 | 6 | | INDUCTOR RF-CH-MLD 1UH 10% .105DX.26LG | 28480 | 9140-0158 |
| A3L16 | 9140-0158 | 6 | | INDUCTOR RF-CH-MLD 1UH 10% .105DX.26LG | 28480 | 9140-0158 |
| A3L17 | 9140-0158 | 6 | | INDUCTOR RF-CH-MLD 1UH 10% .105DX.26LG | 28480 | 9140-0158 |
| A3L18 | 9100-2259 | | | INDUCTOR 1.5UH | | |
| A3L19 | 9100-2259 | | | INDUCTOR 1.5UH | | |
| A3Q1 | 1854-0215 | 1 | | TRANSISTOR NPN SI PD=350MW FT=300MHZ | 04713 | 2N3904 |
| A3Q2 | 1853-0036 | 2 | | TRANSISTOR PNP SI PD=310MW FT=250MHZ | 28480 | 1853-0036 |
| A3Q3 | 1853-0354 | 7 | | TRANSISTOR PNP SI TO-92 PD=350MW | 28480 | 1853-0354 |
| A3Q4 | 1854-0215 | 1 | | TRANSISTOR NPN SI PD=350MW FT=300MHZ | 04713 | 2N3904 |
| A3Q5 | 1853-0036 | 2 | | TRANSISTOR PNP SI PD=310MW FT=250MHZ | 28480 | 1853-0036 |
| A3Q6 | 1855-0570 | 6 | 3 | TRANSISTOR-FET | 28480 | |
| A3Q7 | 1854-0215 | 1 | | TRANSISTOR NPN SI PD=350MW FT=300MHZ | 04713 | 2N3904 |
| A3Q8 | 1854-0215 | 1 | | TRANSISTOR NPN SI PD=350MW FT=300MHZ | 04713 | 2N3904 |
| A3Q9 | 1854-0215 | 1 | | TRANSISTOR NPN SI PD=350MW FT=300MHZ | 04713 | 2N3904 |
| A3Q10 | 1853-0036 | 2 | | TRANSISTOR PNP SI PD=310MW FT=250MHZ | 28480 | 1853-0036 |
| A3Q11 | 1853-0036 | 2 | | TRANSISTOR PNP SI PD=310MW FT=250MHZ | 28480 | 1853-0036 |
| A3Q12 | 1854-0628 | 0 | | TRANSISTOR NPN SI TO-92 PD=625MW | 04713 | MPS-H17 |
| A3Q13 | 1853-0354 | 7 | | TRANSISTOR PNP SI TO-92 PD=350MW | 28480 | 1853-0354 |
| A3Q14 | 1853-0354 | 7 | | TRANSISTOR PNP SI TO-92 PD=350MW | 28480 | 1853-0354 |
| A3Q15 | 1853-0354 | 7 | | TRANSISTOR PNP SI TO-92 PD=350MW | 28480 | 1853-0354 |
| A3Q16 | 1854-0810 | 1 | | TRANSISTOR NPN SI PD=625MW FT=200MHZ | 04713 | 2N3904 |
| A3Q17 | 1854-0628 | 0 | | TRANSISTOR NPN SI TO-92 PD=625MW | 04713 | MPS-H17 |
| A3Q18 | 1853-0354 | 7 | | TRANSISTOR PNP SI TO-92 PD=350MW | 28480 | 1853-0354 |
| A3R1 | 0757-0397 | 3 | | RESISTOR 68.1 1% .125W F TC=0+-100 | 24546 | C4-1/8-T0-68R1-F |
| A3R2 | 0757-0401 | 0 | | RESISTOR 100 1% .125W F TC=0+-100 | 24546 | C4-1/8-T0-101-F |
| A3R3 | 0683-3305 | 2 | 1 | RESISTOR 33 5% .25W FC TC=-400/+500 | 01121 | CB3305 |
| A3R4 | 0683-4735 | 4 | 5 | RESISTOR 47K 5% .25W FC TC=-400/+800 | 01121 | CB4735 |
| A3R5 | 0683-1035 | 1 | 34 | RESISTOR 10K 5% .25W FC TC=-400/+700 | 01121 | CB1035 |
| A3R6 | 0683-1035 | 1 | | RESISTOR 10K 5% .25W FC TC=-400/+700 | 01121 | CB1035 |
| A3R7 | 0683-1025 | 9 | 39 | RESISTOR 1K 5% .25W FC TC=-400/+600 | 01121 | CB1025 |
| A3R8 | 0683-1035 | 1 | | RESISTOR 10K 5% .25W FC TC=-400/+700 | 01121 | CB1035 |
| A3R9 | 0683-1025 | 9 | | RESISTOR 1K 5% .25W FC TC=-400/+600 | 01121 | CB1025 |
| A3R10 | 0683-1025 | 9 | | RESISTOR 1K 5% .25W FC TC=-400/+600 | 01121 | CB1025 |
| A3R11 | 0683-1025 | 9 | | RESISTOR 1K 5% .25W FC TC=-400/+600 | 01121 | CB1025 |
| A3R12 | 0683-6815 | 5 | 2 | RESISTOR 680 5% .25W FC TC=-400/+600 | 01121 | CB6815 |
| A3R13 | 0683-1035 | 1 | | RESISTOR 10K 5% .25W FC TC=-400/+700 | 01121 | CB1035 |
| A3R14 | 0683-1035 | 1 | | RESISTOR 10K 5% .25W FC TC=-400/+700 | 01121 | CB1035 |
| A3R15 | 0683-1045 | 3 | 11 | RESISTOR 100K 5% .25W FC TC=-400/+800 | 01121 | CB1045 |
| A3R16 | 0757-0398 | 4 | 2 | RESISTOR 75 1% .125W F TC=0+-100 | 24546 | C4-1/8-T0-75R0-F |
| A3R17 | 0698-4037 | 0 | | RESISTOR 46.4 1% .125W F TC=0+-100 | 24546 | C4-1/8-T0-46R4-F |
| A3R18 | 0757-0279 | 0 | | RESISTOR 3.16K 1% .125W F TC=0+-100 | 24546 | C4-1/8-T0-3161-F |
| A3R19 | 0757-0199 | 3 | | RESISTOR 21.5K 1% .125W F TC=0+-100 | 24546 | C4-1/8-T0-2152-F |
| A3R20 | 0757-0199 | 3 | | RESISTOR 21.5K 1% .125W F TC=0+-100 | 24546 | C4-1/8-T0-2152-F |
| A3R21 | 0698-3444 | 8 | | RESISTOR 316 1% .125W F TC=0+-100 | 24546 | |
| A3R22 | 0683-1035 | 1 | | RESISTOR 10K 5% .25W FC TC=-400/+700 | 01121 | CB1035 |
| A3R23 | 0757-0279 | 0 | | RESISTOR 3.16K 1% .125W F TC=0+-100 | 24546 | C4-1/8-T0-3161-F |
| A3R24 | 0683-2225 | 3 | | RESISTOR 2.2K 5% .25W FC TC=-400/+700 | 01121 | CB2225 |
| A3R25 | 0683-3325 | 6 | 17 | RESISTOR 3.3K 5% .25W FC TC=-400/+700 | 01121 | CB3325 |
| A3R26 | 0757-0428 | 1 | 1 | RESISTOR 1.62K 1% .125W F TC=0+-100 | 24546 | C4-1/8-T0-1621-F |
| A3R27 | 0683-1045 | 3 | | RESISTOR 100K 5% .25W FC TC=-400/+800 | 01121 | CB1045 |
| A3R28 | 0683-4715 | 0 | 12 | RESISTOR 470 5% .25W FC TC=-400/+600 | 01121 | CB4715 |
| A3R29 | 0683-4715 | 0 | | RESISTOR 470 5% .25W FC TC=-400/+600 | 01121 | CB4715 |
| A3R30 | 0683-4715 | 0 | | RESISTOR 470 5% .25W FC TC=-400/+600 | 01121 | CB4715 |

See introduction to this section for ordering information
*Indicates factory selected value

## Table 6-3. Replaceable Parts

| Reference Designation | HP Part Number | C D | Qty | Description | Mfr Code | Mfr Part Number |
|---|---|---|---|---|---|---|
| A3R33 | 0683-1035 | 1 | | RESISTOR 10K 5% .25W FC TC=-400/+700 | 01121 | CB1035 |
| A3R34 | 0683-4725 | 2 | | RESISTOR 4.7K 5% .25W FC TC=-400/+700 | 01121 | CB4725 |
| A3R35 | 0683-4715 | 0 | | RESISTOR 470 5% .25W FC TC=-400/+600 | 01121 | CB4715 |
| A3R36 | 0683-4725 | 2 | | RESISTOR 4.7K 5% .25W FC TC=-400/+700 | 01121 | CB4725 |
| A3R37 | 0683-1035 | 1 | | RESISTOR 10K 5% .25W FC TC=-400/+700 | 01121 | CB1035 |
| A3R38 | 0683-2725 | 8 | 2 | RESISTOR 2.7K 5% .25W FC TC=-400/+700 | 01121 | CB2725 |
| A3R39 | 0698-3444 | 8 | | RESISTOR 316 1% .125W F TC=0+-100 | | |
| A3R40 | 0683-2225 | 3 | | RESISTOR 2.2K 5% .25W FC TC=-400/+700 | 01121 | CB2225 |
| A3R41 | 0683-1035 | 1 | | RESISTOR 10K 5% .25W FC TC=-400/+700 | 01121 | CB1035 |
| A3R42 | 0683-1025 | 9 | | RESISTOR 1K 5% .25W FC TC=-400/+600 | 01121 | CB1025 |
| A3R43 | 0683-1525 | 4 | | RESISTOR 1.5K 5% .25W FC TC=-400/+700 | 01121 | CB1525 |
| A3R44 | 0683-1525 | 4 | | RESISTOR 1.5K 5% .25W FC TC=-400/+700 | 01121 | CB1525 |
| A3R45 | 0683-4715 | 0 | | RESISTOR 470 5% .25W FC TC=-400/+600 | 01121 | CB4715 |
| A3R46 | 0757-0199 | 3 | | RESISTOR 21.5K 1% .125W F TC=0+-100 | 24546 | C4-1/8-T0-2152-F |
| A3R47 | 0757-0280 | 3 | | RESISTOR 1K 1% .125W F TC=0+-100 | 24546 | C4-1/8-T0-1001-F |
| A3R48 | 0698-0082 | 3 | | RESISTOR 464 1% .125W F TC=0+-100 | | |
| A3R49 | 2100-3210 | 6 | 1 | RESISTOR-TRMR 10K 10% C TOP-ADJ 1-TRN | 28480 | 2100-3210 |
| A3R50 | 0683-2225 | 3 | | RESISTOR 2.2K 5% .25W FC TC=-400/+700 | 01121 | CB2225 |
| A3R51 | 0683-1025 | 9 | | RESISTOR 1K 5% .25W FC TC=-400/+600 | 01121 | CB1025 |
| A3R52 | 0683-1025 | 9 | | RESISTOR 1K 5% .25W FC TC=-400/+600 | 01121 | CB1025 |
| A3R53 | 0683-2225 | 3 | | RESISTOR 2.2K 5% .25W FC TC=-400/+700 | 01121 | CB2225 |
| A3R54 | 0683-1025 | 9 | | RESISTOR 1K 5% .25W FC TC=-400/+600 | 01121 | CB1025 |
| A3R55 | 0683-4715 | 0 | | RESISTOR 470 5% .25W FC TC=-400/+600 | 01121 | CB4715 |
| A3R56 | 0683-1025 | 9 | | RESISTOR 1K 5% .25W FC TC=-400/+600 | 01121 | CB1025 |
| A3R57 | 0683-2725 | 8 | | RESISTOR 2.7K 5% .25W FC TC=-400/+700 | 01121 | CB2725 |
| A3R58 | 0698-3444 | 1 | | RESISTOR 316 1% .125W F TC=0+-100 | 24546 | C4-1/8-T0-316R-F |
| A3R59 | 0757-0401 | 0 | | RESISTOR 100 1% .125W F TC=0+-100 | 24546 | C4-1/8-T0-101-F |
| A3R60 | 0698-0082 | 7 | | RESISTOR 464 1% .125W F TC=0+-100 | 24546 | C4-1/8-T0-4640-F |
| A3R61 | 0698-0082 | 7 | | RESISTOR 464 1% .125W F TC=0+-100 | 24546 | C4-1/8-T0-4640-F |
| A3R62 | 0757-0439 | 4 | | RESISTOR 6.81K 1% .125W F TC=0+-100 | 24546 | C4-1/8-T0-6811-F |
| A3R63 | 0757-0439 | 4 | | RESISTOR 6.81K 1% .125W F TC=0+-100 | 24546 | C4-1/8-T0-6811-F |
| A3R64 | 0683-6815 | 5 | | RESISTOR 680 5% .25W FC TC=-400/+600 | 01121 | CB6815 |
| A3R65 | 0698-3132 | 4 | 1 | RESISTOR 261 1% .125W F TC=0+-100 | 24546 | C4-1/8-T0-2610-F |
| A3R66 | 0683-5625 | 3 | 2 | RESISTOR 5.6K 5% .25W FC TC=-400/+700 | 01121 | CB5625 |
| A3R67 | 0757-0199 | 3 | | RESISTOR 21.5K 1% .125W F TC=0+-100 | 24546 | C4-1/8-T0-2152-F |
| A3R68 | 0757-0290 | 5 | 2 | RESISTOR 6.19K 1% .125W F TC=0+-100 | 19701 | MF4C1/8-T0-6191-F |
| A3R69 | 0757-0401 | 0 | | RESISTOR 100 1% .125W F TC=0+-100 | 24546 | C4-1/8-T0-101-F |
| A3R70 | 0757-0199 | 3 | | RESISTOR 21.5K 1% .125W F TC=0+-100 | 24546 | C4-1/8-T0-2152-F |
| A3R71 | 0698-3154 | 0 | 1 | RESISTOR 4.22K 1% .125W F TC=0+-100 | 24546 | C4-1/8-T0-4221-F |
| A3R72 | 0698-3444 | 1 | | RESISTOR 316 1% .125W F TC=0+-100 | 24546 | C4-1/8-T0-316R-F |
| A3R73 | 0757-0279 | 0 | | RESISTOR 3.16K 1% .125W F TC=0+-100 | 24546 | C4-1/8-T0-3161-F |
| A3R74 | 0757-0403 | 0 | 1 | RESISTOR 121 1% .125W F TC=0+-100 | | |
| A3R75 | 0683-2205 | 9 | | RESISTOR 22 5% .25W FC TC=-400/+500 | 01121 | CB2205 |
| A3R76 | 0757-0278 | 9 | 4 | RESISTOR 1.78K 1% .125W F TC=0+-100 | 24546 | C4-1/8-T0-1781-F |
| A3R77 | 0757-0280 | 3 | | RESISTOR 1K 1% .125W F TC=0+-100 | 24546 | C4-1/8-T0-1001-F |
| A3R78 | 0757-0280 | 3 | | RESISTOR 1K 1% .125W F TC=0+-100 | 24546 | C4-1/8-T0-1001-F |
| A3R79 | 0757-0280 | 3 | | RESISTOR 1K 1% .125W F TC=0+-100 | 24546 | C4-1/8-T0-1001-F |
| A3R80 | 0757-0280 | 3 | | RESISTOR 1K 1% .125W F TC=0+-100 | 24546 | C4-1/8-T0-1001-F |
| A3R81 | 0757-0397 | 3 | | RESISTOR 68.1 1% .125W F TC=0+-100 | 24546 | C4-1/8-T0-68R1-F |
| A3R82 | 0757-0280 | 3 | | RESISTOR 1K 1% .125W F TC=0+-100 | 24546 | C4-1/8-T0-1001-F |
| A3R83 | 0698-0084 | 9 | | RESISTOR 2.15K 1% .125W F TC=0+-100 | 24546 | C4-1/8-T0-2151-F |
| A3R84 | 0698-3155 | 1 | | RESISTOR 4.64K 1% .125W F TC=0+-100 | 24546 | C4-1/8-T0-4641-F |
| A3R85 | 0757-0200 | 7 | 4 | RESISTOR 5.62K 1% .125W F TC=0+-100 | 24546 | C4-1/8-T0-5621-F |
| A3R86 | 0757-0442 | 9 | | RESISTOR 10K 1% .125W F TC=0+-100 | 24546 | C4-1/8-T0-1002-F |
| A3R87 | 0757-0401 | | | RESISTOR 100 1% .125W | | |
| A3U1 | 1820-1199 | 1 | 8 | IC INV TTL LS HEX 1-INP | 01295 | SN74LS04N |
| A3U2 | 1820-1197 | 9 | | IC GATE TTL LS NAND QUAD 2-INP | 01295 | SN74LS00N |
| A3U3 | 1820-1430 | 3 | 2 | IC CNTR TTL LS BIN SYNCHRO POS-EDGE-TRIG | 01295 | SN74LS161AN |
| A3U4 | 1820-1074 | 1 | 2 | IC DRVR TTL NOR QUAD 2-INP | 01295 | SN74128N |
| A3U5 | 1820-1431 | 4 | 2 | IC CNTR TTL LS DECD SYNCHRO | 01295 | SN74LS162AN |
| A3U6 | 5080-3832 | 3 | 1 | IC MISC TTL | 04713 | MC4044P |
| A3U7 | 1826-0522 | 4 | | IC OP AMP QUAD 14-DIP-P PKG | 01295 | TL074CN |
| A3U8 | 1820-1431 | 4 | | IC CNTR TTL LS DECD SYNCHRO | 01295 | SN74LS162AN |
| A3U9 | 1820-1251 | 6 | 1 | IC CNTR TTL LS DECD ASYNCHRO | 01295 | SN74LS196N |
| A3U10 | 1820-1425 | 6 | 1 | IC SCHMITT-TRIG TTL LS NAND QUAD 2-INP | 01295 | SN74LS132N |
| A3U11 | 1820-1144 | 6 | 2 | IC GATE TTL LS NOR QUAD 2-INP | 01295 | SN74LS02N |
| A3U12 | 1820-0693 | 8 | 4 | IC FF TTL S D-TYPE POS-EDGE-TRIG | 01295 | SN74S74N |
| A3U13 | 1820-0693 | 8 | | IC FF TTL S D-TYPE POS-EDGE-TRIG | 01295 | SN74S74N |
| A3U14 | 1820-0802 | 1 | 2 | IC GATE ECL NOR QUAD 2-INP | 04713 | MC10102P |
| A3U15 | 1826-0043 | 4 | | IC OP AMP GP TO-99 PKG | 01928 | CA307T |
| A3U16 | 1826-0282 | 3 | | IC V RGLTR TO-92 | 04713 | MC79L12ACP |
| A3U17 | 1826-0933 | 4 | | IC NJM78L12A V RGLTR TO-92 | 04713 | NJM78L12A |
| A3U18 | 1820-2634 | 0 | 1 | IC INV TTL LS HEX | 01295 | SN74ALS04N |
| A3U19 | 1826-0933 | 4 | | IC RGLTR-FXD-POS 11.4/12V | | |

See introduction to this section for ordering information
*Indicates factory selected value

## Table 6-3. Replaceable Parts

| Reference Designation | HP Part Number | C D | Qty | Description | Mfr Code | Mfr Part Number |
|---|---|---|---|---|---|---|
| A3Y1 | 0410-1287 | 8 | 1 | CRYSTAL 40.0 MHZ | 28480 | 0410-1287 |
| | | | | A3 MISCELLANEOUS PARTS | | |
| | 0340-0220 | 8 | | | 28480 | 0340-0220 |
| | 1400-0249 | 0 | 1 | CABLE TIE .062-.625-DIA .091-WD NYL | 06383 | PLT1M-8 |
| | 3050-0082 | 8 | | WASHER-FL NM NO. 4 .116-IN-ID .188-IN-OD | 28480 | 3050-0082 |
| | 9170-0029 | 3 | | CORE-SHIELDING BEAD | 28480 | 9170-0029 |
| | 04192-00651 | 2 | 2 | SHIELD | 28480 | 04192-00651 |
| A4 | 04192-66504 | 2 | 1 | FRACTIONAL N LOOP BOARD ASSEMBLY | 28480 | 04192-66504 |
| | | | | (NOT INCLUDING THE SHIELD CASES) | | |
| A4C1 | 0160-2204 | 0 | | CAPACITOR-FXD 100PF +-5% 300VDC MICA | 28480 | 0160-2204 |
| A4C2 | 0180-0376 | 5 | 1 | CAPACITOR-FXD .47UF+-10% 35VDC TA | 56289 | 150D474X9035A2 |
| A4C3 | 0160-2220 | 0 | 1 | CAPACITOR-FXD 1200PF +-5% 300VDC MICA | 28480 | 0160-2220 |
| A4C4 | 0160-2940 | 1 | | CAPACITOR-FXD 470PF +-5% 300VDC MICA | 28480 | 0160-2940 |
| A4C5 | 0160-3847 | 9 | | CAPACITOR-FXD .01UF +100-0% 50VDC CER | 28480 | 0160-3847 |
| A4C6 | 0160-3847 | 9 | | CAPACITOR-FXD .01UF +100-0% 50VDC CER | 28480 | 0160-3847 |
| A4C7 | 0160-2204 | 0 | | CAPACITOR-FXD 100PF +-5% 300VDC MICA | 28480 | 0160-2204 |
| A4C8 | 0160-2204 | 0 | | CAPACITOR-FXD 100PF +-5% 300VDC MICA | 28480 | 0160-2204 |
| A4C9 | 0160-4835 | 8 | | CAPACITOR-FXD .1UF 10% 50VDC CER | | |
| A4C10 | 0180-0228 | 6 | 3 | CAPACITOR-FXD 22UF+-10% 15VDC TA | 56289 | 150D226X9015B2 |
| A4C11 | 0160-3847 | 9 | | CAPACITOR-FXD .01UF +100-0% 50VDC CER | 28480 | 0160-3847 |
| A4C12 | 0180-0229 | 7 | 5 | CAPACITOR-FXD 33UF+-10% 10VDC TA | 56289 | 150D336X9010B2 |
| A4C13 | 0160-3847 | 9 | | CAPACITOR-FXD .01UF +100-0% 50VDC CER | 28480 | 0160-3847 |
| A4C14 | 0160-3847 | 9 | | CAPACITOR-FXD .01UF +100-0% 50VDC CER | 28480 | 0160-3847 |
| A4C15 | 0160-3847 | 9 | | CAPACITOR-FXD .01UF +100-0% 50VDC CER | 28480 | 0160-3847 |
| A4C16 | 0160-4835 | 8 | | CAPACITOR-FXD .1UF 10% 50VDC CER | | |
| A4C20 | 0160-3847 | 9 | | CAPACITOR-FXD .01UF +100-0% 50VDC CER | 28480 | 0160-3847 |
| A4C21 | 0160-3847 | 9 | | CAPACITOR-FXD .01UF +100-0% 50VDC CER | 28480 | 0160-3847 |
| A4C22 | 0160-3847 | 9 | | CAPACITOR-FXD .01UF +100-0% 50VDC CER | 28480 | 0160-3847 |
| A4C23 | 0160-2251 | 7 | 1 | CAPACITOR-FXD 5.6PF +-.25PF 500VDC CER | 28480 | 0160-2251 |
| A4C24 | 0160-2940 | 1 | | CAPACITOR-FXD 470PF +-5% 300VDC MICA | 28480 | 0160-2940 |
| A4C25 | 0160-2208 | 4 | 1 | CAPACITOR-FXD 330PF +-5% 300VDC MICA | 28480 | 0160-2208 |
| A4C27 | 0180-1083 | 8 | | CAPACITOR-FXD 33U -10+50% | | |
| A4C28 | 0180-1746 | 5 | 3 | CAPACITOR-FXD 15UF+-10% 20VDC TA | 56289 | 150D156X9020B2 |
| A4C30 | 0160-4640 | 2 | 1 | CAPACITOR-FXD .1UF +-10% 100VDC | 28480 | 0160-4640 |
| A4C31 | 0160-3847 | 9 | | CAPACITOR-FXD .01UF +100-0% 50VDC CER | 28480 | 0160-3847 |
| A4C32 | 0160-2250 | 6 | 1 | CAPACITOR-FXD 5.1PF +-.25PF 500VDC CER | 28480 | 0160-2250 |
| A4C33 | 0160-3847 | 9 | | CAPACITOR-FXD .01UF +100-0% 50VDC CER | 28480 | 0160-3847 |
| A4C34 | 0160-2222 | 2 | 2 | CAPACITOR-FXD 1500PF +-5% 300VDC MICA | 28480 | 0160-2222 |
| A4C35 | 0160-4835 | 8 | | CAPACITOR-FXD .1UF 10% 50VDC CER | | |
| A4C36 | 0160-4461 | 5 | 1 | CAPACITOR-FXD 150PF +-2.5% 160VDC POLYP | 28480 | 0160-4461 |
| A4C37 | 0160-2257 | 3 | | CAPACITOR-FXD 10PF +-5% 500VDC CER 0+-60 | 28480 | 0160-2257 |
| A4C38 | 0160-3847 | 9 | | CAPACITOR-FXD .01UF +100-0% 50VDC CER | 28480 | 0160-3847 |
| A4C39 | 0160-3847 | 9 | | CAPACITOR-FXD .01UF +100-0% 50VDC CER | 28480 | 0160-3847 |
| A4C40 | 0180-0229 | 7 | | CAPACITOR-FXD 33UF+-10% 10VDC TA | 56289 | 150D336X9010B2 |
| A4C41 | 0160-3847 | 9 | | CAPACITOR-FXD .01UF +100-0% 50VDC CER | 28480 | 0160-3847 |
| A4C42 | 0140-0191 | 8 | | CAPACITOR-FXD 56PF +-5% 300VDC MICA | 72136 | DM15E560J0300WV1CR |
| A4C43 | 0140-0191 | 8 | | CAPACITOR-FXD 56PF +-5% 300VDC MICA | 72136 | DM15E560J0300WV1CR |
| A4C44 | 0160-3847 | 9 | | CAPACITOR-FXD .01UF +100-0% 50VDC CER | 28480 | 0160-3847 |
| A4C45 | 0180-0229 | 7 | | CAPACITOR-FXD 33UF+-10% 10VDC TA | 56289 | 150D336X9010B2 |
| A4C46 | 0180-0228 | 6 | | CAPACITOR-FXD 22UF+-10% 15VDC TA | 56289 | 150D226X9015B2 |
| A4C47 | 0160-0127 | 2 | | CAPACITOR-FXD 1UF +-20% 25VDC CER | 28480 | 0160-0127 |
| A4C48 | 0160-4835 | 8 | | CAPACITOR-FXD .1UF 10% 50VDC CER | | |
| A4C50 | 0180-0228 | 6 | | CAPACITOR-FXD 22UF+-10% 15VDC TA | 56289 | 150D226X9015B2 |
| A4C51 | 0160-2204 | 0 | | CAPACITOR-FXD 100PF +-5% 300VDC MICA | 28480 | 0160-2204 |
| A4C52 | 0160-2204 | 0 | | CAPACITOR-FXD 100PF +-5% 300VDC MICA | 28480 | 0160-2204 |
| A4C53 | 0160-3847 | 9 | | CAPACITOR-FXD .01UF +100-0% 50VDC CER | 28480 | 0160-3847 |
| A4C56 | 0160-3847 | 9 | | CAPACITOR-FXD .01UF +100-0% 50VDC CER | 28480 | 0160-3847 |
| A4C57 | 0140-0206 | 6 | 1 | CAPACITOR-FXD 270PF +-5% 500VDC MICA | 72136 | DM15F271J0500WV1CR |
| A4C58 | 0160-3847 | 9 | | CAPACITOR-FXD .01UF +100-0% 50VDC CER | 28480 | 0160-3847 |
| A4C59 | 0160-3847 | 9 | | CAPACITOR-FXD .01UF +100-0% 50VDC CER | 28480 | 0160-3847 |
| A4C60 | 0160-3847 | 9 | | CAPACITOR-FXD .01UF +100-0% 50VDC CER | 28480 | 0160-3847 |
| A4C61 | 0160-3847 | 9 | | CAPACITOR-FXD .01UF +100-0% 50VDC CER | 28480 | 0160-3847 |
| A4C62 | 0160-3847 | 9 | | CAPACITOR-FXD .01UF +100-0% 50VDC CER | 28480 | 0160-3847 |
| A4C63 | 0160-3847 | 9 | | CAPACITOR-FXD .01UF +100-0% 50VDC CER | 28480 | 0160-3847 |
| A4C64 | 0140-0191 | 8 | | CAPACITOR-FXD 56PF +-5% 300VDC MICA | 72136 | DM15E560J0300WV1CR |
| A4C65 | 0160-3847 | 9 | | CAPACITOR-FXD .01UF +100-0% 50VDC CER | 28480 | 0160-3847 |
| A4C66 | 0160-3847 | 9 | | CAPACITOR-FXD .01UF +100-0% 50VDC CER | 28480 | 0160-3847 |
| A4C67 | 0160-4835 | 8 | | CAPACITOR-FXD .1UF 10% 50VDC CER | | |
| A4C68 | 0160-3847 | 9 | | CAPACITOR-FXD .01UF +100-0% 50VDC CER | 28480 | 0160-3847 |
| A4C69 | 0160-3847 | 9 | | CAPACITOR-FXD .01UF +100-0% 50VDC CER | 28480 | 0160-3847 |
| A4C73 ~ C79 | 0180-1083 | | | CAPACITOR-FXD 33U -10+50% | | |
| A4C80, C82 | 0180-1050 | | | CAPACITOR-FXD 100U -10+50% | | |
| A4C81, C83 | 0180-1085 | | | CAPACITOR-FXD 4.7U +-20% | | |
| A4C84 | 0160-0127 | | | CAPACITOR-FXD 1UF +80-20% 50VDC CER | | |
| A4C85 | 0160-4832 | | | CAPACITOR-FXD 0.01UF | | |

See introduction to this section for ordering information
*Indicates factory selected value

## Table 6-3. Replaceable Parts

| Reference Designation | HP Part Number | C D | Qty | Description | Mfr Code | Mfr Part Number |
|---|---|---|---|---|---|---|
| A4CR1 | 1901-0518 | 8 | | DIODE-SM SIG SCHOTTKY | 28480 | 1901-0518 |
| A4CR2 | 0122-0109 | 6 | 2 | DIODE-VVC 2.2PF 5% C3/C25-MIN=4.5 | 04713 | BB105B |
| A4CR3 | 0122-0109 | 6 | | DIODE-VVC 2.2PF 5% C3/C25-MIN=4.5 | 04713 | BB105B |
| A4CR4 | 1901-0040 | 1 | | DIODE-SWITCHING 30V 50MA 2NS DO-35 | 28480 | 1901-0040 |
| A4CR10 | 1901-0040 | 1 | | DIODE-SWITCHING 30V 50MA 2NS DO-35 | 28480 | 1901-0040 |
| A4CR11 | 1902-3036 | 3 | | DIODE-ZNR 3.16V 5% DO-7 PD=.4W TC=-.064% | 28480 | 1902-3036 |
| A4CR12 | 1901-0040 | 1 | | DIODE-SWITCHING 30V 50MA 2NS DO-35 | 28480 | 1901-0040 |
| A4CR13 | 1901-0535 | 9 | 4 | DIODE-SM SIG SCHOTTKY | 28480 | 1901-0535 |
| A4CR14 | 1901-0535 | 9 | | DIODE-SM SIG SCHOTTKY | 28480 | 1901-0535 |
| A4CR15 | 1901-0535 | 9 | | DIODE-SM SIG SCHOTTKY | 28480 | 1901-0535 |
| A4CR16 | 1901-0040 | 1 | | DIODE-SWITCHING 30V 50MA 2NS DO-35 | 28480 | 1901-0040 |
| A4CR17 | 1901-0535 | 9 | | DIODE-SM SIG SCHOTTKY | 28480 | 1901-0535 |
| A4CR18 | 1901-0040 | 1 | | DIODE-SWITCHING 30V 50MA 2NS DO-35 | 28480 | 1901-0040 |
| A4CR19 | 1901-0040 | 1 | | DIODE-SWITCHING 30V 50MA 2NS DO-35 | 28480 | 1901-0040 |
| A4CR20 | 1901-0040 | 1 | | DIODE-SWITCHING 30V 50MA 2NS DO-35 | 28480 | 1901-0040 |
| A4CR21 | 1902-0041 | 4 | | DIODE-ZNR 5.11V 5% DO-35 PD=.4W | 28480 | 1902-0041 |
| A4CR23 | 1901-0040 | 1 | | DIODE-SWITCHING 30V 50MA 2NS DO-35 | 28480 | 1901-0040 |
| A4CR24 | 1901-0040 | 1 | | DIODE-SWITCHING 30V 50MA 2NS DO-35 | 28480 | 1901-0040 |
| A4CR30 | 1901-0025 | 7 | 1 | DIODE | | |
| A4CR31 | 1902-3059 | | | DIODE-ZNR 3.83V | | |
| A4J1 | 1250-0257 | 1 | | CONNECTOR-RF SMB M PC 50-OHM | 28480 | 1250-0257 |
| A4J2 | 1250-0257 | 1 | | CONNECTOR-RF SMB M PC 50-OHM | 28480 | 1250-0257 |
| A4J3 | 1251-0513 | 4 | | CONNECTOR 5-PIN M POST TYPE | 28480 | 1251-0513 |
| A4J4 | 1251-4822 | 6 | | CONNECTOR 3-PIN M POST TYPE | 28480 | 1251-4822 |
| A4J5 | 1250-0257 | 1 | | CONNECTOR-RF SMB M PC 50-OHM | 28480 | 1250-0257 |
| A4J6 | 1250-0257 | 1 | | CONNECTOR-RF SMB M PC 50-OHM | 28480 | 1250-0257 |
| A4J7 | 1200-0607 | 0 | | SOCKET-IC 16-CONT DIP DIP-SLDR | 28480 | 1200-0607 |
| A4J8 | 1250-0257 | 1 | | CONNECTOR-RF SMB M PC 50-OHM | 28480 | 1250-0257 |
| A4J9 | 1250-0257 | 1 | | CONNECTOR-RF SMB M PC 50-OHM | 28480 | 1250-0257 |
| A4J10 | 1200-0567 | | | SKT-IC 28-CONT | | |
| A4L1 | 9140-0137 | 1 | 2 | INDUCTOR RF-CH-MLD 1MH 5% .2DX.45LG Q=60 | 28480 | 9140-0137 |
| A4L2 | 9140-0137 | 1 | | INDUCTOR RF-CH-MLD 1MH 5% .2DX.45LG Q=60 | 28480 | 9140-0137 |
| A4L3 | 9140-0466 | 9 | | COIL-VAR 475NH-525NH Q=80 PC-MTG | 28480 | 9140-0466 |
| A4L4 | 9140-0114 | 4 | | INDUCTOR RF-CH-MLD 10UH 10% .166DX.385LG | 28480 | 9140-0114 |
| A4L5 | 9100-1788 | 6 | | CHOKE-WIDE BAND ZMAX=680 OHMS 180 MHZ | 02114 | VK200 20/48 |
| A4L6 | 9140-0210 | 6 | | TRANSFORMER | | |
| A4L7 | 9140-0210 | 6 | | TRANSFORMER | | |
| A4L8 | 9100-3559 | 3 | 1 | INDUCTOR RF-CH-MLD 5.1UH 5% .166DX.385LG | 28480 | 9100-3559 |
| A4L9 | 9100-1788 | | | CHOKE-WIDE | | |
| A4L10 | 9100-3139 | | | INDUCTOR 75UH 15% | | |
| A4Q1 | 1854-0296 | 8 | 13 | TRANSISTOR NPN SI TO-92 PD=310MW | 28480 | 1854-0296 |
| A4Q2 | 1855-0570 | 1 | 1 | TRANSISTOR-FET | 28480 | |
| A4Q3 | 1854-0296 | 8 | | TRANSISTOR NPN SI TO-92 PD=310MW | 28480 | 1854-0296 |
| A4Q4 | 1855-0570 | 6 | | TRANSISTOR-FET | 28480 | |
| A4Q5 | 1855-0570 | 6 | | TRANSISTOR-FET | 28480 | |
| A4Q6 | 1854-0296 | 8 | | TRANSISTOR NPN SI TO-92 PD=310MW | 28480 | 1854-0296 |
| A4Q7 | 1854-0296 | 8 | | TRANSISTOR NPN SI TO-92 PD=310MW | 28480 | 1854-0296 |
| A4Q8 | 1854-0296 | 8 | | TRANSISTOR NPN SI TO-92 PD=310MW | 28480 | 1854-0296 |
| A4Q9 | 1854-0296 | 8 | | TRANSISTOR NPN SI TO-92 PD=310MW | 28480 | 1854-0296 |
| A4Q10 | 1853-0089 | 5 | 9 | TRANSISTOR PNP 2N4917 SI PD=200MW | 07263 | 2N4917 |
| A4Q11 | 1853-0089 | 5 | | TRANSISTOR PNP 2N4917 SI PD=200MW | 07263 | 2N4917 |
| A4Q12 | 1853-0089 | 5 | | TRANSISTOR PNP 2N4917 SI PD=200MW | 07263 | 2N4917 |
| A4Q13 | 1853-0089 | 5 | | TRANSISTOR PNP 2N4917 SI PD=200MW | 07263 | 2N4917 |
| A4Q14 | 1854-0215 | 8 | | TRANSISTOR NPN SI | | |
| A4Q15 | 1854-0215 | 8 | | TRANSISTOR NPN SI | | |
| A4Q16 | 1853-0089 | 5 | | TRANSISTOR PNP 2N4917 SI PD=200MW | 07263 | 2N4917 |
| A4Q17 | 1854-0296 | 8 | | TRANSISTOR NPN SI TO-92 PD=310MW | 28480 | 1854-0296 |
| A4Q18 | 1853-0089 | 5 | | TRANSISTOR PNP 2N4917 SI PD=200MW | 07263 | 2N4917 |
| A4Q19 | 1854-0296 | 8 | | TRANSISTOR NPN SI TO-92 PD=310MW | 28480 | 1854-0296 |
| A4Q20 | 1854-0296 | 8 | | TRANSISTOR NPN SI TO-92 PD=310MW | 28480 | 1854-0296 |
| A4Q21 | 1855-0308 | 5 | 1 | TRANSISTOR-JFET DUAL N-CHAN D-MODE SI | 28480 | 1855-0308 |
| A4Q22 | 1855-0082 | 2 | 2 | TRANSISTOR J-FET P-CHAN D-MODE SI | 28480 | 1855-0082 |
| A4Q23 | 1854-0830 | 9 | 1 | TRANSISTOR-DUAL NPN PD=750MW | 28480 | 1854-0221 |
| A4Q25 | 1854-0215 | 1 | | TRANSISTOR NPN SI PD=350MW FT=300MHZ | 04713 | 2N3904 |
| A4Q26 | 1854-0215 | 1 | | TRANSISTOR NPN SI PD=350MW FT=300MHZ | 04713 | 2N3904 |
| A4Q27 | 1855-0081 | 1 | 2 | TRANSISTOR J-FET N-CHAN D-MODE SI | 28480 | 1855-0081 |
| A4Q28 | 1855-0081 | 1 | | TRANSISTOR J-FET N-CHAN D-MODE SI | 28480 | 1855-0081 |
| A4Q29 | 1854-0215 | 1 | | TRANSISTOR NPN SI PD=350MW FT=300MHZ | 04713 | 2N3904 |
| A4Q30 | 1853-0448 | 0 | 4 | TRANSISTOR PNP SI TO-92 PD=625MW | 04713 | MPSH81 |
| A4Q31 | 1853-0448 | 0 | | TRANSISTOR PNP SI TO-92 PD=625MW | 04713 | MPSH81 |
| A4Q32 | 1853-0448 | 0 | | TRANSISTOR PNP SI TO-92 PD=625MW | 04713 | MPSH81 |
| A4Q33 | 1854-0345 | 8 | 1 | TRANSISTOR NPN 2N5179 SI TO-72 PD=200MW | 04713 | 2N5179 |
| A4Q35 | 1853-0089 | 5 | | TRANSISTOR PNP 2N4917 SI PD=200MW | 07263 | 2N4917 |
| A4Q36 | 1853-0089 | 5 | | TRANSISTOR PNP 2N4917 SI PD=200MW | 07263 | 2N4917 |
| A4Q37 | 1853-0089 | 5 | | TRANSISTOR PNP 2N4917 SI PD=200MW | 07263 | 2N4917 |
| A4Q38 | 1853-0448 | 0 | | TRANSISTOR PNP SI TO-92 PD=625MW | 04713 | MPSH81 |
| A4Q39 | 1854-0296 | 8 | | TRANSISTOR NPN SI TO-92 PD=310MW | 28480 | 1854-0296 |
| A4Q40 | 1854-0296 | 8 | | TRANSISTOR NPN SI TO-92 PD=310MW | 28480 | 1854-0296 |

See introduction to this section for ordering information
*Indicates factory selected value

## Table 6-3. Replaceable Parts

| Reference Designation | HP Part Number | C D | Qty | Description | Mfr Code | Mfr Part Number |
|---|---|---|---|---|---|---|
| A4R1 | 0757-0403 | 2 | 1 | RESISTOR 121 1% .125W F TC=0+-100 | 24546 | C4-1/8-T0-121R-F |
| A4R2 | 0757-0441 | 8 | | RESISTOR 8.25K 1% .125W F TC=0+-100 | 24546 | C4-1/8-T0-8251-F |
| A4R3 | 0698-3136 | 8 | 1 | RESISTOR 17.8K 1% .125W F TC=0+-100 | 24546 | C4-1/8-T0-1782-F |
| A4R4 | 0683-4705 | 8 | 25 | RESISTOR 47 5% .25W FC TC=-400/+500 | 01121 | CB4705 |
| A4R5 | 0757-0442 | 9 | | RESISTOR 10K 1% .125W F TC=0+-100 | 24546 | C4-1/8-T0-1002-F |
| A4R6 | 0683-1035 | 1 | | RESISTOR 10K 5% .25W FC TC=-400/+700 | 01121 | CB1035 |
| A4R7 | 0757-0442 | 9 | | RESISTOR 10K 1% .125W F TC=0+-100 | 24546 | C4-1/8-T0-1002-F |
| A4R8 | 0683-4705 | 8 | | RESISTOR 47 5% .25W FC TC=-400/+500 | 01121 | CB4705 |
| A4R9 | 0757-0442 | 9 | | RESISTOR 10K 1% .125W F TC=0+-100 | 24546 | C4-1/8-T0-1002-F |
| A4R10 | 0683-2215 | 1 | 16 | RESISTOR 220 5% .25W FC TC=-400/+600 | 01121 | CB2215 |
| A4R11 | 0698-3155 | 3 | | RESISTOR 4.64K 1% .125W F TC=0+-100 | | |
| A4R12 | 0757-1045 | 9 | | RESISTOR 100K 1% .25W F TC=0+-100 | | |
| A4R13 | 0698-0084 | 9 | | RESISTOR 2.15K 1% .125W F TC=0+-100 | 24546 | C4-1/8-T0-2151-F |
| A4R14 | 0683-1525 | 4 | | RESISTOR 1.5K 5% .25W FC TC=-400/+700 | 01121 | CB1525 |
| A4R15 | 0683-1025 | 9 | | RESISTOR 1K 5% .25W FC TC=-400/+600 | 01121 | CB1025 |
| A4R16 | 0683-3315 | 4 | 3 | RESISTOR 330 5% .25W FC TC=-400/+600 | 01121 | CB3315 |
| A4R17 | 0683-3315 | 4 | | RESISTOR 330 5% .25W FC TC=-400/+600 | 01121 | CB3315 |
| A4R18 | 0683-4705 | 8 | | RESISTOR 47 5% .25W FC TC=-400/+500 | 01121 | CB4705 |
| A4R20 | 0683-1045 | 3 | | RESISTOR 100K 5% .25W FC TC=-400/+800 | 01121 | CB1045 |
| A4R21 | 0683-3935 | 4 | 2 | RESISTOR 39K 5% .25W FC TC=-400/+800 | 01121 | CB3935 |
| A4R22 | 0683-3935 | 4 | | RESISTOR 39K 5% .25W FC TC=-400/+800 | 01121 | CB3935 |
| A4R23 | 0683-1045 | 3 | | RESISTOR 100K 5% .25W FC TC=-400/+800 | 01121 | CB1045 |
| A4R24 | 0683-1035 | 1 | | RESISTOR 10K 5% .25W FC TC=-400/+700 | 01121 | CB1035 |
| A4R25 | 0683-1025 | 9 | | RESISTOR 1K 5% .25W FC TC=-400/+600 | 01121 | CB1025 |
| A4R26 | 0698-3155 | 1 | | RESISTOR 4.64K 1% .125W F TC=0+-100 | 24546 | C4-1/8-T0-4641-F |
| A4R27 | 0757-1094 | 9 | | RESISTOR 1.47K 1% .125W F TC=0+-100 | 24546 | C4-1/8-T0-1471-F |
| A4R28 | 0683-4705 | 8 | | RESISTOR 47 5% .25W FC TC=-400/+500 | 01121 | CB4705 |
| A4R29 | 0683-2235 | 5 | 3 | RESISTOR 22K 5% .25W FC TC=-400/+800 | 01121 | CB2235 |
| A4R30 | 0683-1035 | 1 | | RESISTOR 10K 5% .25W FC TC=-400/+700 | 01121 | CB1035 |
| A4R31 | 2100-0567 | 0 | 1 | RESISTOR-TRMR 2K 10% C TOP-ADJ 1-TRN | 28480 | 2100-0567 |
| A4R32 | 0757-0280 | 3 | | RESISTOR 1K 1% .125W F TC=0+-100 | 24546 | C4-1/8-T0-1001-F |
| A4R33 | 0683-2215 | 1 | | RESISTOR 220 5% .25W FC TC=-400/+600 | 01121 | CB2215 |
| A4R34 | 0683-2215 | 1 | | RESISTOR 220 5% .25W FC TC=-400/+600 | 01121 | CB2215 |
| A4R35 | 0757-0421 | 4 | | RESISTOR 825 1% .125W F TC=0+-100 | 24546 | C4-1/8-T0-825R-F |
| A4R36 | 0757-0416 | 7 | 2 | RESISTOR 511 1% .125W F TC=0+-100 | 24546 | C4-1/8-T0-511R-F |
| A4R37 | 0757-0416 | 7 | | RESISTOR 511 1% .125W F TC=0+-100 | 24546 | C4-1/8-T0-511R-F |
| A4R38 | 0683-2215 | 1 | | RESISTOR 220 5% .25W FC TC=-400/+600 | 01121 | CB2215 |
| A4R39 | 0757-0200 | 7 | | RESISTOR 5.62K 1% .125W F TC=0+-100 | 24546 | C4-1/8-T0-5621-F |
| A4R40 | 0757-0279 | 0 | | RESISTOR 3.16K 1% .125W F TC=0+-100 | 24546 | C4-1/8-T0-3161-F |
| A4R41 | 0757-0288 | 1 | 1 | RESISTOR 9.09K 1% .125W F TC=0+-100 | 19701 | MF4C1/8-T0-9091-F |
| A4R42 | 0757-0274 | 5 | 4 | RESISTOR 1.21K 1% .125W F TC=0+-100 | 24546 | C4-1/8-T0-1211-F |
| A4R44 | 0757-0280 | 3 | | RESISTOR 1K 1% .125W F TC=0+-100 | 24546 | C4-1/8-T0-1001-F |
| A4R45 | 0683-1025 | 9 | | RESISTOR 1K 5% .25W FC TC=-400/+600 | 01121 | CB1025 |
| A4R46 | 0683-2215 | 1 | | RESISTOR 220 5% .25W FC TC=-400/+600 | 01121 | CB2215 |
| A4R47 | 0683-2215 | 1 | | RESISTOR 220 5% .25W FC TC=-400/+600 | 01121 | CB2215 |
| A4R49 | 0698-3155 | 1 | | RESISTOR 4.64K 1% .125W F TC=0+-100 | 24546 | C4-1/8-T0-4641-F |
| A4R50 | 0683-2225 | 3 | | RESISTOR 2.2K 5% .25W FC TC=-400/+700 | 01121 | CB2225 |
| A4R51 | 0683-2225 | 3 | | RESISTOR 2.2K 5% .25W FC TC=-400/+700 | 01121 | CB2225 |
| A4R52 | 0698-3156 | 2 | | RESISTOR 14.7K 1% .125W F TC=0+-100 | 24546 | C4-1/8-T0-1472-F |
| A4R53 | 0757-0200 | 7 | | RESISTOR 5.62K 1% .125W F TC=0+-100 | 24546 | C4-1/8-T0-5621-F |
| A4R54 | 0683-4705 | 8 | | RESISTOR 47 5% .25W FC TC=-400/+500 | 01121 | CB4705 |
| A4R55 | 0757-0441 | 8 | | RESISTOR 8.25K 1% .125W F TC=0+-100 | 24546 | C4-1/8-T0-8251-F |
| A4R56 | 0683-4705 | 8 | | RESISTOR 47 5% .25W FC TC=-400/+500 | 01121 | CB4705 |
| A4R57 | 0757-0422 | 5 | 1 | RESISTOR 909 1% .125W F TC=0+-100 | 24546 | C4-1/8-T0-909R-F |
| A4R58 | 0698-0084 | 9 | | RESISTOR 2.15K 1% .125W F TC=0+-100 | 24546 | C4-1/8-T0-2151-F |
| A4R59 | 0757-0444 | 1 | 3 | RESISTOR 12.1K 1% .125W F TC=0+-100 | 24546 | C4-1/8-T0-1212-F |
| A4R60 | 0698-0083 | 8 | 5 | RESISTOR 1.96K 1% .125W F TC=0+-100 | 24546 | C4-1/8-T0-1961-F |
| A4R61 | 0757-0444 | 1 | | RESISTOR 12.1K 1% .125W F TC=0+-100 | 24546 | C4-1/8-T0-1212-F |
| A4R62 | 0757-0444 | 1 | | RESISTOR 12.1K 1% .125W F TC=0+-100 | 24546 | C4-1/8-T0-1212-F |
| A4R63 | 0698-3162 | 0 | | RESISTOR 46.4K 1% .125W F TC=0+-100 | 24546 | C4-1/8-T0-4642-F |
| A4R64 | 0683-1025 | 9 | | RESISTOR 1K 5% .25W FC TC=-400/+600 | 01121 | CB1025 |
| A4R65 | 0683-2205 | 9 | | RESISTOR 22 5% .25W FC TC=-400/+500 | 01121 | CB2205 |
| A4R66 | 0683-4715 | 0 | | RESISTOR 470 5% .25W FC TC=-400/+600 | 01121 | CB4715 |
| A4R67 | 0683-4705 | 8 | | RESISTOR 47 5% .25W FC TC=-400/+500 | 01121 | CB4705 |
| A4R68 | 0757-0401 | 0 | | RESISTOR 100 1% .125W F TC=0+-100 | 24546 | C4-1/8-T0-101-F |
| A4R69 | 0757-0401 | 0 | | RESISTOR 100 1% .125W F TC=0+-100 | 24546 | C4-1/8-T0-101-F |
| A4R70 | 0683-4705 | 8 | | RESISTOR 47 5% .25W FC TC=-400/+500 | 01121 | CB4705 |
| A4R71 | 0698-0084 | 9 | | RESISTOR 2.15K 1% .125W F TC=0+-100 | 24546 | C4-1/8-T0-2151-F |
| A4R72 | 0683-4705 | 8 | | RESISTOR 47 5% .25W FC TC=-400/+500 | 01121 | CB4705 |
| A4R73 | 0698-3443 | 0 | | RESISTOR 287 1% .125W F TC=0+-100 | 24546 | C4-1/8-T0-287R-F |
| A4R74 | 0757-0418 | 9 | 1 | RESISTOR 619 1% .125W F TC=0+-100 | 24546 | C4-1/8-T0-619R-F |
| A4R75 | 0683-4705 | 8 | | RESISTOR 47 5% .25W FC TC=-400/+500 | 01121 | CB4705 |
| A4R76 | 1810-0294 | 4 | 1 | NETWORK-RESISTOR 16 PIN DIP; RES | 28480 | 1810-0294 |
| A4R77 | 0757-0442 | 9 | | RESISTOR 10K 1% .125W F TC=0+-100 | 24546 | C4-1/8-T0-1002-F |

See introduction to this section for ordering information
*Indicates factory selected value

## Table 6-3. Replaceable Parts

| Reference Designation | HP Part Number | C D | Qty | Description | Mfr Code | Mfr Part Number |
|---|---|---|---|---|---|---|
| A4R78 | 0683-4705 | 8 | | RESISTOR 47 5% .25W FC TC=-400/+500 | 01121 | CB4705 |
| A4R79 | 2100-3096 | 6 | 1 | RESISTOR-TRMR 50K 10% C TOP-ADJ 17-TRN | 32997 | 3292W-1-503 |
| A4R80 | 2100-3211 | 7 | 6 | RESISTOR-TRMR 1K 10% C TOP-ADJ 1-TRN | 28480 | 2100-3211 |
| A4R81 | 0757-0488 | 3 | 1 | RESISTOR 909K 1% .125W F TC=0+-100 | 28480 | 0757-0488 |
| A4R82 | 0683-1065 | 7 | 2 | RESISTOR 10M 5% .25W CC TC=-900/+1100 | 01121 | CB1065 |
| A4R83 | 2100-3383 | 4 | 2 | RESISTOR-TRMR 50 10% C TOP-ADJ 1-TRN | 28480 | 2100-3383 |
| A4R84 | 0757-0401 | 0 | | RESISTOR 100 1% .125W F TC=0+-100 | 24546 | C4-1/8-T0-101-F |
| A4R85 | 0683-1035 | 1 | | RESISTOR 10K 5% .25W FC TC=-400/+700 | 01121 | CB1035 |
| A4R86 | 0683-5625 | 3 | | RESISTOR 5.6K 5% .25W FC TC=-400/+700 | 01121 | CB5625 |
| A4R87 | 0683-2225 | 3 | | RESISTOR 2.2K 5% .25W FC TC=-400/+700 | 01121 | CB2225 |
| A4R88 | 0757-0421 | 3 | | RESISTOR 825 1% .125W F TC=0+-100 | | |
| A4R89 | 0757-0421 | 3 | | RESISTOR 825 1% .125W F TC=0+-100 | | |
| A4R90 | 0698-0083 | 8 | | RESISTOR 1.96K 1% .125W F TC=0+-100 | 24546 | C4-1/8-T0-1961-F |
| A4R91 | 0757-0401 | 0 | | RESISTOR 100 1% .125W F TC=0+-100 | 24546 | C4-1/8-T0-101-F |
| A4R92 | 0683-2215 | 1 | | RESISTOR 220 5% .25W FC TC=-400/+600 | 01121 | CB2215 |
| A4R93 | 0698-3150 | 6 | 3 | RESISTOR 2.37K 1% .125W F TC=0+-100 | 24546 | C4-1/8-T0-2371-F |
| A4R94 | 0698-3150 | 6 | | RESISTOR 2.37K 1% .125W F TC=0+-100 | 24546 | C4-1/8-T0-2371-F |
| A4R95 | 0698-0083 | 8 | | RESISTOR 1.96K 1% .125W F TC=0+-100 | 24546 | C4-1/8-T0-1961-F |
| A4R96 | 0757-0279 | 7 | | RESISTOR 3.16K 1% .125W F TC=0+-100 | | |
| A4R97 | 0683-4705 | 8 | | RESISTOR 47 5% .25W FC TC=-400/+500 | 01121 | CB4705 |
| A4R98 | 0757-0419 | 3 | | RESISTOR 681 1% .125W F TC=0+-100 | | |
| A4R99 | 0698-3150 | 6 | | RESISTOR 2.37K 1% .125W F TC=0+-100 | 24546 | C4-1/8-T0-2371-F |
| A4R100 | 0698-0083 | 8 | | RESISTOR 1.96K 1% .125W F TC=0+-100 | 24546 | C4-1/8-T0-1961-F |
| A4R101 | 0757-0395 | 1 | | RESISTOR 56.2 1% .125W F TC=0+-100 | 24546 | C4-1/8-T0-56R2-F |
| A4R102 | 0757-0274 | 5 | | RESISTOR 1.21K 1% .125W F TC=0+-100 | 24546 | C4-1/8-T0-1211-F |
| A4R103 | 0757-0274 | 5 | | RESISTOR 1.21K 1% .125W F TC=0+-100 | 24546 | C4-1/8-T0-1211-F |
| A4R104 | 0683-4705 | 8 | | RESISTOR 47 5% .25W FC TC=-400/+500 | 01121 | CB4705 |
| A4R105 | 0757-0395 | 1 | | RESISTOR 56.2 1% .125W F TC=0+-100 | 24546 | C4-1/8-T0-56R2-F |
| A4R106 | 0757-0419 | 0 | | RESISTOR 681 1% .125W F TC=0+-100 | 24546 | C4-1/8-T0-681R-F |
| A4R107 | 0757-0419 | 0 | | RESISTOR 681 1% .125W F TC=0+-100 | 24546 | C4-1/8-T0-681R-F |
| A4R108 | 0683-4705 | 8 | | RESISTOR 47 5% .25W FC TC=-400/+500 | 01121 | CB4705 |
| A4R109 | 0683-3325 | 6 | | RESISTOR 3.3K 5% .25W FC TC=-400/+700 | 01121 | CB3325 |
| A4R110 | 0683-4715 | 0 | | RESISTOR 470 5% .25W FC TC=-400/+600 | 01121 | CB4715 |
| A4R111 | 0683-4705 | 8 | | RESISTOR 47 5% .25W FC TC=-400/+500 | 01121 | CB4705 |
| A4R112 | 0757-0419 | 0 | | RESISTOR 681 1% .125W F TC=0+-100 | 24546 | C4-1/8-T0-681R-F |
| A4R113 | 0683-4715 | 0 | | RESISTOR 470 5% .25W FC TC=-400/+600 | 01121 | CB4715 |
| A4R114 | 0683-4705 | 8 | | RESISTOR 47 5% .25W FC TC=-400/+500 | 01121 | CB4705 |
| A4R115 | 0698-3155 | 1 | | RESISTOR 4.64K 1% .125W F TC=0+-100 | 24546 | C4-1/8-T0-4641-F |
| A4R116 | 0698-3441 | 8 | | RESISTOR 215 1% .125W F TC=0+-100 | 24546 | C4-1/8-T0-215R-F |
| A4R117 | 0683-2205 | 9 | | RESISTOR 22 5% .25W FC TC=-400/+500 | 01121 | CB2205 |
| A4R118 | 0698-3155 | 1 | | RESISTOR 4.64K 1% .125W F TC=0+-100 | 24546 | C4-1/8-T0-4641-F |
| A4R119 | 0757-0439 | 4 | | RESISTOR 6.81K 1% .125W F TC=0+-100 | 24546 | C4-1/8-T0-6811-F |
| A4R120 | 0757-0419 | 0 | | RESISTOR 681 1% .125W F TC=0+-100 | 24546 | C4-1/8-T0-681R-F |
| A4R121 | 0757-0440 | 7 | 2 | RESISTOR 7.5K 1% .125W F TC=0+-100 | 24546 | C4-1/8-T0-7501-F |
| A4R121 | 0757-0440 | 7 | | RESISTOR 7.5K 1% .125W F TC=0+-100 | 24546 | C4-1/8-T0-7501-F |
| A4R122 | 0757-0279 | 0 | | RESISTOR 3.16K 1% .125W F TC=0+-100 | 24546 | C4-1/8-T0-3161-F |
| A4R123 | 0698-3156 | 2 | | RESISTOR 14.7K 1% .125W F TC=0+-100 | 24546 | C4-1/8-T0-1472-F |
| A4R124 | 0698-0085 | 0 | | RESISTOR 2.61K 1% .125W F TC=0+-100 | | |
| A4R125 | 0683-4705 | 8 | | RESISTOR 47 5% .25W FC TC=-400/+500 | 01121 | CB4705 |
| A4R126 | 0757-0317 | 7 | 1 | RESISTOR 1.33K 1% .125W F TC=0+-100 | 24546 | C4-1/8-T0-1331-F |
| A4R127 | 0757-0419 | | | RESISTOR 681 1% | | |
| A4R128 | 0683-1825 | 7 | 2 | RESISTOR 1.8K 5% .25W FC TC=-400/+700 | 01121 | CB1825 |
| A4R130 | 0683-3325 | 6 | | RESISTOR 3.3K 5% .25W FC TC=-400/+700 | 01121 | CB3325 |
| A4R131 | 0683-2225 | 3 | | RESISTOR 2.2K 5% .25W FC TC=-400/+700 | 01121 | CB2225 |
| A4R132 | 0683-2225 | 6 | | RESISTOR 2.2K 5% .25W FC TC=-400/+700 | | |
| A4R133 | 0683-1035 | 1 | | RESISTOR 10K 5% .25W FC TC=-400/+700 | 01121 | CB1035 |
| A4R134 | 0683-1035 | 1 | | RESISTOR 10K 5% .25W FC TC=-400/+700 | 01121 | CB1035 |
| A4R135 | 0757-0420 | 3 | | RESISTOR 750Ω 5% .25W FC TC=-400/+700 | | |
| A4R136 | 0683-1035 | 1 | | RESISTOR 10K 5% .25W FC TC=-400/+700 | 01121 | CB1035 |
| A4R137 | 0683-1035 | 1 | | RESISTOR 10K 5% .25W FC TC=-400/+700 | 01121 | CB1035 |
| A4R138 | 0683-1035 | 1 | | RESISTOR 10K 5% .25W FC TC=-400/+700 | 01121 | CB1035 |
| A4R139 | 0698-3152 | 8 | | RESISTOR 3.48K 1% .125W F TC=0+-100 | 24546 | C4-1/8-T0-8251-F |
| A4R140 | 0757-0317 | 1 | | RESISTOR 1.33K 1% .125W F TC=0+-100 | 24546 | C4-1/8-T0-4641-F |
| A4R141 | 0683-1015 | 7 | 9 | RESISTOR 100 5% .25W FC TC=-400/+500 | 01121 | CB1015 |
| A4R142 | 0683-1035 | 1 | | RESISTOR 10K 5% .25W FC TC=-400/+700 | 01121 | CB1035 |
| A4R143 | 0683-1035 | 1 | | RESISTOR 10K 5% .25W FC TC=-400/+700 | 01121 | CB1035 |
| A4R144 | 0683-1035 | 1 | | RESISTOR 10K 5% .25W FC TC=-400/+700 | 01121 | CB1035 |
| A4R145 | 0757-0398 | 4 | | RESISTOR 75 1% .125W F TC=0+-100 | 24546 | C4-1/8-T0-75R0-F |
| A4R146 | 0698-4037 | 0 | | RESISTOR 46.4 1% .125W F TC=0+-100 | 24546 | C4-1/8-T0-46R4-F |
| A4R147 | 0683-1035 | 1 | | RESISTOR 10K 5% .25W FC TC=-400/+700 | 01121 | CB1035 |
| A4R148 | 0698-3444 | 1 | | RESISTOR 316 1% .125W F TC=0+-100 | 24546 | C4-1/8-T0-316R-F |
| A4R149 | 0683-4705 | 8 | | RESISTOR 47 5% .25W FC TC=-400/+500 | 01121 | CB4705 |
| A4R150 | 0757-0439 | 4 | | RESISTOR 6.81K 1% .125W F TC=0+-100 | 24546 | C4-1/8-T0-6811-F |
| A4R151 | 0698-3155 | 1 | | RESISTOR 4.64K 1% .125W F TC=0+-100 | 24546 | C4-1/8-T0-4641-F |
| A4R152 | 0757-0417 | 8 | | RESISTOR 562 1% .125W F TC=0+-100 | 24546 | C4-1/8-T0-562R-F |
| A4R153 | 0683-4705 | 8 | | RESISTOR 47 5% .25W FC TC=-400/+500 | 01121 | CB4705 |

See introduction to this section for ordering information
*Indicates factory selected value

## Table 6-3. Replaceable Parts

| Reference Designation | HP Part Number | C D | Qty | Description | Mfr Code | Mfr Part Number |
|---|---|---|---|---|---|---|
| A4R154 | 0683-4705 | 8 | | RESISTOR 47 5% .25W FC TC=-400/+500 | 01121 | CB4705 |
| A4R155 | 0757-0279 | | | RESISTOR 10K 1% .125W | | |
| A4U1 | 1820-0802 | 1 | | IC GATE ECL NOR QUAD 2-INP | 04713 | MC10102P |
| A4U2 | 1826-0139 | 9 | | IC OP AMP GP DUAL 8-DIP-P PKG | 0192B | CA1458G |
| A4U3 | 1826-0021 | 8 | 1 | IC OP AMP GP TO-99 PKG | 27014 | LM310H |
| A4U4 | 5080-3846 | 3 | | IC V RGLTR POS 11.5/12.5V | | |
| A4U5 | 5080-3847 | 4 | | IC V RGLTR NEG 12.4/11.6V | | |
| A4U7 | 1820-1196 | 8 | 7 | IC FF TTL LS D-TYPE POS-EDGE-TRIG COM | 01295 | SN74LS174N |
| A4U8 | 1821-0001 | 4 | | TRANSISTOR ARRAY 14-PIN PLSTC DIP | 0192B | CA3046 |
| A4U9 | 1820-0817 | 8 | 1 | IC FF ECL D-M/S DUAL | 04713 | MC10131P |
| A4U10 | 1820-1112 | 8 | | IC FF TTL LS D-TYPE POS-EDGE-TRIG | 01295 | SN74LS74AN |
| A4U11 | 1820-0693 | 8 | | IC FF TTL S D-TYPE POS-EDGE-TRIG | 01295 | SN74S74N |
| A4U12 | 1820-0629 | 0 | 8 | IC FF TTL S J-K NEG-EDGE-TRIG | 01295 | SN74S112N |
| A4U14 | 1820-0629 | 0 | | IC FF TTL S J-K NEG-EDGE-TRIG | 01295 | SN74S112N |
| A4U15 | 1820-1144 | 6 | | IC GATE TTL LS NOR QUAD 2-INP | 01295 | SN74LS02N |
| A4U16 | 1820-0629 | 0 | | IC FF TTL S J-K NEG-EDGE-TRIG | 01295 | SN74S112N |
| A4U17 | 1820-2004 | 9 | 1 | IC MISC NMOS | 28480 | 1820-2004 |
| A4U18 | 1820-0629 | 0 | | IC FF TTL S J-K NEG-EDGE-TRIG | 01295 | SN74S112N |
| A4U19 | 1820-0693 | 8 | | IC FF TTL S D-TYPE POS-EDGE-TRIG | 01295 | SN74S74N |
| A4U20 | 1820-0629 | 0 | | IC FF TTL S J-K NEG-EDGE-TRIG | 01295 | SN74S112N |
| A4U21 | 1820-0683 | 6 | 2 | IC INV TTL S HEX 1-INP | 01295 | SN74S04N |
| A4U22 | 1820-0681 | 4 | 3 | IC GATE TTL S NAND QUAD 2-INP | 01295 | SN74S00N |
| A4U23 | 1820-0681 | 4 | | IC GATE TTL S NAND QUAD 2-INP | 01295 | SN74S00N |
| A4U24 | 1820-1196 | 8 | | IC FF TTL LS D-TYPE POS-EDGE-TRIG COM | 01295 | SN74LS174N |
| A4U25 | 1820-1196 | 8 | | IC FF TTL LS D-TYPE POS-EDGE-TRIG COM | 01295 | SN74LS174N |
| A4U26 | 1820-1322 | 2 | 1 | IC GATE TTL S NOR QUAD 2-INP | 01295 | SN74S02N |
| A4U27 | 1820-0629 | 0 | | IC FF TTL S J-K NEG-EDGE-TRIG | 01295 | SN74S112N |
| A4U28 | 1820-1279 | 8 | 2 | IC CNTR TTL LS DECD UP/DOWN SYNCHRO | 01295 | SN74LS190N |
| A4U29 | 1820-1279 | 8 | | IC CNTR TTL LS DECD UP/DOWN SYNCHRO | 01295 | SN74LS190N |
| A4U30 | 1820-0681 | 4 | | IC GATE TTL S NAND QUAD 2-INP | 01295 | SN74S00N |
| A4U31 | 1820-0629 | 0 | | IC FF TTL S J-K NEG-EDGE-TRIG | 01295 | SN74S112N |
| A4U32 | 1820-0629 | 0 | | IC FF TTL S J-K NEG-EDGE-TRIG | 01295 | SN74S112N |
| A4U33 | 1820-0683 | 6 | | IC INV TTL S HEX 1-INP | 01295 | SN74S04N |
| A4U34 | 1826-0275 | | | IC 78L12A V RGLTR TO-92 | | |
| A4W1 | 8159-0005 | 0 | 6 | WIRE 22AWG W PVC 1X22 80C | 28480 | 8159-0005 |
| A4W2 | 8159-0005 | 0 | | WIRE 22AWG W PVC 1X22 80C | 28430 | 8159-0005 |
| | | 0 | | | | |
| | 04192-61681 | 6 | 1 | CABLE ASSEMBLY-TRD 320MM WHT | 28480 | 04192-61681 |
| | 04192-61682 | 7 | 1 | CABLE ASSEMBLY 165MM RED | 28480 | 04192-61682 |
| | 0340-0220 | 8 | | | 28480 | 0340-0220 |
| | 1258-0141 | 8 | | JUMPER-REM | 28480 | 1258-0141 |
| | 3050-0082 | 8 | | WASHER-FL NM NO. 4 .116-IN-ID .188-IN-OD | 28480 | 3050-0082 |
| | 9170-0029 | 3 | | CORE-SHIELDING BEAD | 28480 | 9170-0029 |
| | 04192-00651 | 2 | | SHIELD | 28480 | 04192-00651 |
| A5 | 04192-66505 | 3 | 1 | KEYBOARD & DISPLAY ASSEMBLY (NOT INCLUDING THE SHIELD CASES) | 28480 | 04192-66505 |
| A5C1 | 0180-1061 | 7 | 3 | CAPACITOR-FXD 220 UF 16VDC M | 28480 | 0180-1061 |
| A5C2 | 0160-2055 | 9 | 11 | CAPACITOR-FXD .01UF +80-20% 100VDC CER | 28480 | 0160-2055 |
| A5C3 | 0180-1061 | 7 | | CAPACITOR-FXD 220 UF 16VDC M | 28480 | 0180-1061 |
| A5C4 | 0160-2055 | 9 | | CAPACITOR-FXD .01UF +80-20% 100VDC CER | 28480 | 0160-2055 |
| A5C5 | 0180-1085 | 5 | | CAPACITOR-FXD 4.7UF 16VDC TA | 28480 | 0180-1085 |
| A5C6 | 0180-1085 | 5 | | CAPACITOR-FXD 4.7UF 16VDC TA | 28480 | 0180-1085 |
| A5C7 | 0180-1085 | 5 | | CAPACITOR-FXD 4.7UF 16VDC TA | 28480 | 0180-1085 |
| A5C8 | 0180-1085 | 5 | | CAPACITOR-FXD 4.7UF 16VDC TA | 28480 | 0180-1085 |
| A5C9 | 0180-1061 | 7 | | CAPACITOR-FXD 220 UF 16VDC M | 28480 | 0180-1061 |
| A5C10 | 0160-2055 | 9 | | CAPACITOR-FXD .01UF +80-20% 100VDC CER | 28480 | 0160-2055 |
| A5C11 | 0180-1085 | 5 | | CAPACITOR-FXD 4.7UF 16VDC TA | 28480 | 0180-1085 |
| A5C12 | 0180-1085 | 5 | | CAPACITOR-FXD 4.7UF 16VDC TA | 28480 | 0180-1085 |
| A5C13 | 0180-1085 | 5 | | CAPACITOR-FXD 4.7UF 16VDC TA | 28480 | 0180-1085 |
| A5C14 | 0160-4298 | 6 | 1 | CAPACITOR-FXD 4700PF +-20% 250VDC CER | 56289 | C067F251H472MS22-CDH |
| A5C15 | 0160-0362 | 7 | 1 | CAPACITOR-FXD 510PF +-5% 300VDC MICA | 28480 | 0160-0362 |
| A5C30 | 0180-1085 | 5 | | CAPACITOR-FXD 4.7UF 16VDC TA | 28480 | 0180-1085 |
| A5C31 | 0180-1085 | 5 | | CAPACITOR-FXD 4.7UF 16VDC TA | 28480 | 0180-1085 |
| A5C36 | 0180-1085 | 5 | | CAPACITOR-FXD 4.7UF 16VDC TA | 28480 | 0180-1085 |
| A5DS1 | 1990-0486 | 6 | 2 | LED-VISIBLE LUM-INT=1MCD IF=20MA-MAX | 28480 | 5082-4684 |
| A5DS2 | 1990-0540 | 3 | 10 | DISPLAY-NUM-SEG 1-CHAR .43-H | 28480 | 5082-7650 |
| A5DS3 | 1990-0540 | 3 | | DISPLAY-NUM-SEG 1-CHAR .43-H | 28480 | 5082-7650 |
| A5DS4 | 1990-0540 | 3 | | DISPLAY-NUM-SEG 1-CHAR .43-H | 28480 | 5082-7650 |
| A5DS5 | 1990-0540 | 3 | | DISPLAY-NUM-SEG 1-CHAR .43-H | 28480 | 5082-7650 |
| A5DS6 | 1990-0540 | 3 | | DISPLAY-NUM-SEG 1-CHAR .43-H | 28480 | 5082-7650 |
| A5DS7 | 1990-0517 | 4 | 25 | LED-VISIBLE LUM-INT=3MCD IF=20MA-MAX | 28480 | 5082-4655 |
| A5DS8 | 1990-0517 | 4 | | LED-VISIBLE LUM-INT=3MCD IF=20MA-MAX | 28480 | 5082-4655 |
| A5DS9 | 1990-0517 | 4 | | LED-VISIBLE LUM-INT=3MCD IF=20MA-MAX | 28480 | 5082-4655 |
| A5DS10 | 1990-0517 | 4 | | LED-VISIBLE LUM-INT=3MCD IF=20MA-MAX | 28480 | 5082-4655 |

See introduction to this section for ordering information
*Indicates factory selected value

## Table 6-3. Replaceable Parts

| Reference Designation | HP Part Number | C D | Qty | Description | Mfr Code | Mfr Part Number |
|---|---|---|---|---|---|---|
| A5DS11 | 1990-0517 | 4 | | LED-VISIBLE LUM-INT=3MCD IF=20MA-MAX | 28480 | 5082-4655 |
| A5DS12 | 1990-0517 | 4 | | LED-VISIBLE LUM-INT=3MCD IF=20MA-MAX | 28480 | 5082-4655 |
| A5DS13 | 1990-0517 | 4 | | LED-VISIBLE LUM-INT=3MCD IF=20MA-MAX | 28480 | 5082-4655 |
| A5DS14 | 1990-0517 | 4 | | LED-VISIBLE LUM-INT=3MCD IF=20MA-MAX | 28480 | 5082-4655 |
| A5DS15 | 1990-0517 | 4 | | LED-VISIBLE LUM-INT=3MCD IF=20MA-MAX | 28480 | 5082-4655 |
| A5DS16 | 1990-0517 | 4 | | LED-VISIBLE LUM-INT=3MCD IF=20MA-MAX | 28480 | 5082-4655 |
| A5DS17 | 1990-0517 | 4 | | LED-VISIBLE LUM-INT=3MCD IF=20MA-MAX | 28480 | 5082-4655 |
| A5DS18 | 1990-0517 | 4 | | LED-VISIBLE LUM-INT=3MCD IF=20MA-MAX | 28480 | 5082-4655 |
| A5DS19 | 1990-0670 | 0 | 19 | LED-VISIBLE LUM-INT=1MCD IF=20MA-MAX | 28480 | 1990-0670 |
| A5DS20 | 1990-0540 | 3 | | DISPLAY-NUM-SEG 1-CHAR .43-H | 28480 | 5082-7650 |
| A5DS21 | 1990-0540 | 3 | | DISPLAY-NUM-SEG 1-CHAR .43-H | 28480 | 5082-7650 |
| A5DS22 | 1990-0540 | 3 | | DISPLAY-NUM-SEG 1-CHAR .43-H | 28480 | 5082-7650 |
| A5DS23 | 1990-0540 | 3 | | DISPLAY-NUM-SEG 1-CHAR .43-H | 28480 | 5082-7650 |
| A5DS24 | 1990-0540 | 3 | | DISPLAY-NUM-SEG 1-CHAR .43-H | 28480 | 5082-7650 |
| A5DS25 | 1990-0517 | 4 | | LED-VISIBLE LUM-INT=3MCD IF=20MA-MAX | 28480 | 5082-4655 |
| A5DS26 | 1990-0517 | 4 | | LED-VISIBLE LUM-INT=3MCD IF=20MA-MAX | 28480 | 5082-4655 |
| A5DS27 | 1990-0517 | 4 | | LED-VISIBLE LUM-INT=3MCD IF=20MA-MAX | 28480 | 5082-4655 |
| A5DS28 | 1990-0517 | 4 | | LED-VISIBLE LUM-INT=3MCD IF=20MA-MAX | 28480 | 5082-4655 |
| A5DS29 | 1990-0517 | 4 | | LED-VISIBLE LUM-INT=3MCD IF=20MA-MAX | 28480 | 5082-4655 |
| A5DS30 | 1990-0517 | 4 | | LED-VISIBLE LUM-INT=3MCD IF=20MA-MAX | 28480 | 5082-4655 |
| A5DS31 | 1990-0517 | 4 | | LED-VISIBLE LUM-INT=3MCD IF=20MA-MAX | 28480 | 5082-4655 |
| A5DS32 | 1990-0517 | 4 | | LED-VISIBLE LUM-INT=3MCD IF=20MA-MAX | 28480 | 5082-4655 |
| A5DS33 | 1990-0517 | 4 | | LED-VISIBLE LUM-INT=3MCD IF=20MA-MAX | 28480 | 5082-4655 |
| A5DS34 | 1990-0517 | 4 | | LED-VISIBLE LUM-INT=3MCD IF=20MA-MAX | 28480 | 5082-4655 |
| A5DS35 | 1990-0517 | 4 | | LED-VISIBLE LUM-INT=3MCD IF=20MA-MAX | 28480 | 5082-4655 |
| A5DS36 | 1990-0517 | 4 | | LED-VISIBLE LUM-INT=3MCD IF=20MA-MAX | 28480 | 5082-4655 |
| A5DS37 | 1990-0670 | 0 | | LED-VISIBLE LUM-INT=1MCD IF=20MA-MAX | 28480 | 1990-0670 |
| A5DS38 | 1990-0531 | 2 | 8 | DISPLAY-NUM-SEG 1-CHAR .3-H | 28480 | 5082-7610 |
| A5DS39 | 1990-0531 | 2 | | DISPLAY-NUM-SEG 1-CHAR .3-H | 28480 | 5082-7610 |
| A5DS40 | 1990-0531 | 2 | | DISPLAY-NUM-SEG 1-CHAR .3-H | 28480 | 5082-7610 |
| A5DS41 | 1990-0531 | 2 | | DISPLAY-NUM-SEG 1-CHAR .3-H | 28480 | 5082-7610 |
| A5DS42 | 1990-0531 | 2 | | DISPLAY-NUM-SEG 1-CHAR .3-H | 28480 | 5082-7610 |
| A5DS43 | 1990-0531 | 2 | | DISPLAY-NUM-SEG 1-CHAR .3-H | 28480 | 5082-7610 |
| A5DS44 | 1990-0531 | 2 | | DISPLAY-NUM-SEG 1-CHAR .3-H | 28480 | 5082-7610 |
| A5DS45 | 1990-0531 | 2 | | DISPLAY-NUM-SEG 1-CHAR .3-H | 28480 | 5082-7610 |
| A5DS46 | 1990-0487 | 7 | 30 | LED-VISIBLE LUM-INT=1MCD IF=20MA-MAX | 28480 | 5082-4584 |
| A5DS47 | 1990-0487 | 7 | | LED-VISIBLE LUM-INT=1MCD IF=20MA-MAX | 28480 | 5082-4584 |
| A5DS48 | 1990-0517 | 4 | | LED-VISIBLE LUM-INT=3MCD IF=20MA-MAX | 28480 | 5082-4655 |
| A5DS49 | 1990-0487 | 7 | | LED-VISIBLE LUM-INT=1MCD IF=20MA-MAX | 28480 | 5082-4584 |
| A5DS50 | 1990-0487 | 7 | | LED-VISIBLE LUM-INT=1MCD IF=20MA-MAX | 28480 | 5082-4584 |
| A5DS51 | 1990-0487 | 7 | | LED-VISIBLE LUM-INT=1MCD IF=20MA-MAX | 28480 | 5082-4584 |
| A5DS52 | 1990-0487 | 7 | | LED-VISIBLE LUM-INT=1MCD IF=20MA-MAX | 28480 | 5082-4584 |
| A5DS53 | 1990-0487 | 7 | | LED-VISIBLE LUM-INT=1MCD IF=20MA-MAX | 28480 | 5082-4584 |
| A5DS54 | 1990-0487 | 7 | | LED-VISIBLE LUM-INT=1MCD IF=20MA-MAX | 28480 | 5082-4584 |
| A5DS55 | 1990-0487 | 7 | | LED-VISIBLE LUM-INT=1MCD IF=20MA-MAX | 28480 | 5082-4584 |
| A5DS56 | 1990-0487 | 7 | | LED-VISIBLE LUM-INT=1MCD IF=20MA-MAX | 28480 | 5082-4584 |
| A5DS57 | 1990-0487 | 7 | | LED-VISIBLE LUM-INT=1MCD IF=20MA-MAX | 28480 | 5082-4584 |
| A5DS58 | 1990-0487 | 7 | | LED-VISIBLE LUM-INT=1MCD IF=20MA-MAX | 28480 | 5082-4584 |
| A5DS59 | 1990-0487 | 7 | | LED-VISIBLE LUM-INT=1MCD IF=20MA-MAX | 28480 | 5082-4584 |
| A5DS60 | 1990-0487 | 7 | | LED-VISIBLE LUM-INT=1MCD IF=20MA-MAX | 28480 | 5082-4584 |
| A5DS61 | 1990-0487 | 7 | | LED-VISIBLE LUM-INT=1MCD IF=20MA-MAX | 28480 | 5082-4584 |
| A5DS62 | 1990-0487 | 7 | | LED-VISIBLE LUM-INT=1MCD IF=20MA-MAX | 28480 | 5082-4584 |
| A5DS63 | 1990-0487 | 7 | | LED-VISIBLE LUM-INT=1MCD IF=20MA-MAX | 28480 | 5082-4584 |
| A5DS64 | 1990-0487 | 7 | | LED-VISIBLE LUM-INT=1MCD IF=20MA-MAX | 28480 | 5082-4584 |
| A5DS65 | 1990-0487 | 7 | | LED-VISIBLE LUM-INT=1MCD IF=20MA-MAX | 28480 | 5082-4584 |
| A5DS66 | 1990-0487 | 7 | | LED-VISIBLE LUM-INT=1MCD IF=20MA-MAX | 28480 | 5082-4584 |
| A5DS67 | 1990-0487 | 7 | | LED-VISIBLE LUM-INT=1MCD IF=20MA-MAX | 28480 | 5082-4584 |
| A5DS68 | 1990-0487 | 7 | | LED-VISIBLE LUM-INT=1MCD IF=20MA-MAX | 28480 | 5082-4584 |
| A5DS69 | 1990-0487 | 7 | | LED-VISIBLE LUM-INT=1MCD IF=20MA-MAX | 28480 | 5082-4584 |
| A5DS70 | 1990-0487 | 7 | | LED-VISIBLE LUM-INT=1MCD IF=20MA-MAX | 28480 | 5082-4584 |
| A5DS71 | 1990-0487 | 7 | | LED-VISIBLE LUM-INT=1MCD IF=20MA-MAX | 28480 | 5082-4584 |
| A5DS72 | 1990-0670 | 0 | | LED-VISIBLE LUM-INT=1MCD IF=20MA-MAX | 28480 | 1990-0670 |
| A5DS73 | 1990-0670 | 0 | | LED-VISIBLE LUM-INT=1MCD IF=20MA-MAX | 28480 | 1990-0670 |
| A5DS74 | 1990-0487 | 7 | | LED-VISIBLE LUM-INT=1MCD IF=20MA-MAX | 28480 | 5082-4584 |
| A5DS75 | 1990-0487 | 7 | | LED-VISIBLE LUM-INT=1MCD IF=20MA-MAX | 28480 | 5082-4584 |
| A5DS76 | 1990-0487 | 7 | | LED-VISIBLE LUM-INT=1MCD IF=20MA-MAX | 28480 | 5082-4584 |
| A5DS77 | 1990-0670 | 0 | | LED-VISIBLE LUM-INT=1MCD IF=20MA-MAX | 28480 | 1990-0670 |
| A5DS78 | 1990-0670 | 0 | | LED-VISIBLE LUM-INT=1MCD IF=20MA-MAX | 28480 | 1990-0670 |
| A5DS79 | 1990-0487 | 7 | | LED-VISIBLE LUM-INT=1MCD IF=20MA-MAX | 28480 | 5082-4584 |
| A5DS80 | 1990-0670 | 0 | | LED-VISIBLE LUM-INT=1MCD IF=20MA-MAX | 28480 | 1990-0670 |
| A5DS81 | 1990-0670 | 0 | | LED-VISIBLE LUM-INT=1MCD IF=20MA-MAX | 28480 | 1990-0670 |
| A5DS82 | 1990-0487 | 7 | | LED-VISIBLE LUM-INT=1MCD IF=20MA-MAX | 28480 | 5082-4584 |
| A5DS83 | 1990-0670 | 0 | | LED-VISIBLE LUM-INT=1MCD IF=20MA-MAX | 28480 | 1990-0670 |
| A5DS84 | 1990-0670 | 0 | | LED-VISIBLE LUM-INT=1MCD IF=20MA-MAX | 28480 | 1990-0670 |
| A5DS85 | 1990-0670 | 0 | | LED-VISIBLE LUM-INT=1MCD IF=20MA-MAX | 28480 | 1990-0670 |

See introduction to this section for ordering information
*Indicates factory selected value

## Table 6-3. Replaceable Parts

| Reference Designation | HP Part Number | C D | Qty | Description | Mfr Code | Mfr Part Number |
|---|---|---|---|---|---|---|
| A5DS86 | 1990-0670 | 0 | | LED-VISIBLE LUM-INT=1MCD IF=20MA-MAX | 28480 | 1990-0670 |
| A5DS87 | 1990-0670 | 0 | | LED-VISIBLE LUM-INT=1MCD IF=20MA-MAX | 28480 | 1990-0670 |
| A5DS88 | 1990-0670 | 0 | | LED-VISIBLE LUM-INT=1MCD IF=20MA-MAX | 28480 | 1990-0670 |
| A5DS89 | 1990-0670 | 0 | | LED-VISIBLE LUM-INT=1MCD IF=20MA-MAX | 28480 | 1990-0670 |
| A5DS90 | 1990-0670 | 0 | | LED-VISIBLE LUM-INT=1MCD IF=20MA-MAX | 28480 | 1990-0670 |
| A5DS91 | 1990-0670 | 0 | | LED-VISIBLE LUM-INT=1MCD IF=20MA-MAX | 28480 | 1990-0670 |
| A5DS92 | 1990-0670 | 0 | | LED-VISIBLE LUM-INT=1MCD IF=20MA-MAX | 28480 | 1990-0670 |
| A5DS93 | 1990-0670 | 0 | | LED-VISIBLE LUM-INT=1MCD IF=20MA-MAX | 28480 | 1990-0670 |
| A5J1-18 | 1200-0638 | 7 | 24 | SOCKET-IC 14-CONT DIP DIP-SLDR | 28480 | 1200-0638 |
| A5J19 | 0360-1705 | 8 | 1 | CABLE TRANSITION 40-TERM INSUL DSPL TYPE | 28480 | 0360-1705 |
| A5R1 | 0683-5615 | 1 | 1 | RESISTOR 560 5% .25W FC TC=-400/+600 | 01121 | CB5615 |
| A5R2 | 0683-3315 | 4 | | RESISTOR 330 5% .25W FC TC=-400/+600 | 01121 | CB3315 |
| A5R3 | 0683-1035 | 1 | | RESISTOR 10K 5% .25W FC TC=-400/+700 | 01121 | CB1035 |
| A5R4 | 0683-4725 | 2 | | RESISTOR 4.7K 5% .25W FC TC=-400/+700 | 01121 | CB4725 |
| A5R5 | 1810-0269 | 3 | 13 | NETWORK-RES 9-SIP10.0K OHM X 8 | 28480 | 1810-0269 |
| A5R6 | 1810-0247 | 7 | 5 | NETWORK-RES 16-DIP220.0 OHM X 8 | 01121 | 316B221 |
| A5R7 | 1810-0269 | 3 | | NETWORK-RES 9-SIP10.0K OHM X 8 | 28480 | 1810-0269 |
| A5R8 | 1810-0269 | 3 | | NETWORK-RES 9-SIP10.0K OHM X 8 | 28480 | 1810-0269 |
| A5R9 | 1810-0269 | 3 | | NETWORK-RES 9-SIP10.0K OHM X 8 | 28480 | 1810-0269 |
| A5R10 | 1810-0247 | 7 | | NETWORK-RES 16-DIP220.0 OHM X 8 | 01121 | 316B221 |
| A5R11 | 1810-0269 | 3 | | NETWORK-RES 9-SIP10.0K OHM X 8 | 28480 | 1810-0269 |
| A5R12 | 1810-0275 | 1 | 2 | NETWORK-RES 10-SIP1.0K OHM X 9 | 01121 | 210A102 |
| A5R13 | 1810-0275 | 1 | | NETWORK-RES 10-SIP1.0K OHM X 9 | 01121 | 210A102 |
| A5R14 | 1810-0301 | 4 | 3 | NETWORK-RES 16-DIP51.0 OHM X 8 | 01121 | 316B510 |
| A5R15 | 1810-0269 | 3 | | NETWORK-RES 9-SIP10.0K OHM X 8 | 28480 | 1810-0269 |
| A5R16 | 1810-0269 | 3 | | NETWORK-RES 9-SIP10.0K OHM X 8 | 28480 | 1810-0269 |
| A5R17 | 1810-0301 | 4 | | NETWORK-RES 16-DIP51.0 OHM X 8 | 01121 | 316B510 |
| A5R18 | 1810-0269 | 3 | | NETWORK-RES 9-SIP10.0K OHM X 8 | 28480 | 1810-0269 |
| A5S1-45 | 5060-9436 | 7 | 45 | PUSHBUTTON SWITCH P.C. MOUNT | 28480 | 5060-9436 |
| A5S46 | 3101-2046 | 7 | 1 | SWITCH-SL DPDT STD 1.5A 250VAC PC | 28480 | 3101-2046 |
| A5U1 | 1858-0038 | 4 | 4 | TRANSISTOR ARRAY 14-PIN PLSTC DIP | 28480 | 1858-0038 |
| A5U2 | 1858-0038 | 4 | | TRANSISTOR ARRAY 14-PIN PLSTC DIP | 28480 | 1858-0038 |
| A5U3 | 1820-0495 | 8 | 1 | IC DCDR TTL 4-TO-16-LINE 4-INP | 01295 | SN74154N |
| A5U4 | 1820-1416 | 5 | 4 | IC SCHMITT-TRIG TTL LS INV HEX 1-INP | 01295 | SN74LS14N |
| A5U5 | 1820-0668 | 7 | 1 | IC BFR TTL NON-INV HEX 1-INP | 01295 | SN7407N |
| A5U6 | 1858-0038 | 4 | | TRANSISTOR ARRAY 14-PIN PLSTC DIP | 28480 | 1858-0038 |
| A5U7 | 1858-0038 | 4 | | TRANSISTOR ARRAY 14-PIN PLSTC DIP | 28480 | 1858-0038 |
| A5U8 | 1820-1200 | 5 | 4 | IC INV TTL LS HEX | 01295 | SN74LS05N |
| A5U9 | 1820-1200 | 5 | | IC INV TTL LS HEX | 01295 | SN74LS05N |
| A5U10 | 1820-1200 | 5 | | IC INV TTL LS HEX | 01295 | SN74LS05N |
| A5U11 | 1820-1278 | 7 | 15 | IC CNTR TTL LS BIN UP/DOWN SYNCHRO | 01295 | SN74LS191N |
| A5U12 | 1820-1418 | 7 | 1 | IC DCDR TTL LS BCD-TO-DEC 4-TO-10-LINE | 01295 | SN74LS42N |
| A5U13 | 1858-0033 | 9 | 4 | TRANSISTOR | 28480 | 1858-0033 |
| A5U14 | 1858-0033 | 9 | | TRANSISTOR | 28480 | 1858-0033 |
| A5U15 | 1858-0033 | 9 | | TRANSISTOR | 28480 | 1858-0033 |
| A5U16 | 1858-0033 | 9 | | TRANSISTOR | 28480 | 1858-0033 |
| A5U17 | 1820-1202 | 7 | 3 | IC GATE TTL LS NAND TPL 3-INP | 01295 | SN74LS10N |
| A5U18 | 1820-1851 | 2 | 1 | IC ENCDR TTL LS | 34335 | AM74LS148N |
| | 04192-61634 | 9 | 1 | CABLE ASSEMBLY-FLAT | 28480 | 04192-61634 |
| | 5040-3323 | 1 | 2 | INSULATOR | | |
| | 5041-0276 | 5 | 1 | KEY CAP-PEARL GRAY | 28480 | 5041-0276 |
| | 5041-0342 | 6 | 4 | KEY CAP | 28480 | 5041-0342 |
| | 5041-0351 | 7 | 15 | KEY CAP | 28480 | 5041-0351 |
| | 5041-0375 | 5 | 1 | KEY CAP-QUARTER, SMOKE | 28480 | 5041-0375 |
| | 5041-0384 | 6 | 4 | KEY CAP-SMOKE GRAY | 28480 | 5041-0384 |
| | 5041-0441 | 6 | 1 | KEY CAP-SMOKE BLUE | 28480 | 5041-0441 |
| | 5041-0922 | 8 | 7 | KEY CAP-EBY PEARL | 28480 | 5041-0922 |
| | 5041-1755 | 7 | 1 | KEY CAP (.) | 28480 | 5041-1755 |
| | 5041-1756 | 8 | 1 | KEY CAP-QUARTER (0) | 28480 | 5041-1756 |
| | 5041-1757 | 9 | 1 | KEY CAP-QUARTER (1) | 28480 | 5041-1757 |
| | 5041-1758 | 0 | 1 | KEY CAP-QUARTER (2) | 28480 | 5041-1758 |
| | 5041-1759 | 1 | 1 | KEY CAP-QUARTER (3) | 28480 | 5041-1759 |
| | 5041-1760 | 4 | 1 | KEY CAP-QUARTER (4) | 28480 | 5041-1760 |
| | 5041-1761 | 5 | 1 | KEY CAP-QUARTER (5) | 28480 | 5041-1761 |
| | 5041-1762 | 6 | 2 | KEY CAP QUARTER (6) | 28480 | 5041-1762 |
| | 5041-1763 | 7 | 1 | KEY CAP- (7) | 28480 | 5041-1763 |
| | 5041-1764 | 8 | 1 | KEY CAP-QUARTER (8) | 28480 | 5041-1764 |
| | 5041-1770 | 6 | 1 | KEY CAP-QUARTER (-) | 28480 | 5041-1770 |
| | 04140-40002 | 9 | 2 | INSULATOR | 28480 | 04140-40002 |
| | 04191-40003 | 1 | 2 | LAMP HOUSE | 28480 | 04191-40003 |
| | 04262-25003 | 5 | 1 | INSULATOR | 28480 | 04262-25003 |
| | 04262-40001 | 5 | 1 | INSULATOR | 28480 | 04262-40001 |
| | 04274-40003 | 1 | 3 | INSULATOR | 28480 | 04274-40003 |

See introduction to this section for ordering information
*Indicates factory selected value

## Table 6-3. Replaceable Parts

| Reference Designation | HP Part Number | C D | Qty | Description | Mfr Code | Mfr Part Number |
|---|---|---|---|---|---|---|
| A6 | 04192-66506 | 4 | 1 | CONTROL LOGIC BOARD ASSEMBLY | 28480 | 04192-66506 |
| A6C1 | 0180-1085 | 5 | | CAPACITOR-FXD 4.7UF 16VDC TA | 28480 | 0180-1085 |
| A6C2 | 0180-1085 | 5 | | CAPACITOR-FXD 4.7UF 16VDC TA | 28480 | 0180-1085 |
| A6C3 | 0180-0291 | 3 | 5 | CAPACITOR-FXD 1UF+-10% 35VDC TA | 56289 | 150D105X9035A2 |
| A6C4 | 0180-1085 | 5 | | CAPACITOR-FXD 4.7UF 16VDC TA | 28480 | 0180-1085 |
| A6C10 | 0160-0153 | 4 | 2 | CAPACITOR-FXD 1000PF +-10% 200VDC POLYE | 28480 | 0160-0153 |
| A6C11 | 0180-1085 | 5 | | CAPACITOR-FXD 4.7UF 16VDC TA | 28480 | 0180-1085 |
| A6C12 | 0160-0153 | 4 | | CAPACITOR-FXD 1000PF +-10% 200VDC POLYE | 28480 | 0160-0153 |
| A6C20 | 0180-1057 | 1 | 1 | CAPACITOR:FXD 2200 UF 16VDCW AL ELECT | 28480 | 0180-1057 |
| A6C21 | 0160-3456 | 6 | | CAPACITOR-FXD 1000PF +-10% 1KVDC CER | 28480 | 0160-3456 |
| A6C22 | 0180-1704 | 5 | 4 | CAPACITOR-FXD 47UF+-10% 6VDC TA | 56289 | 150D476X9006B2 |
| A6C23 | 0180-1085 | 5 | | CAPACITOR-FXD 4.7UF 16VDC TA | 28480 | 0180-1085 |
| A6C24 | 0180-1085 | 5 | | CAPACITOR-FXD 4.7UF 16VDC TA | 28480 | 0180-1085 |
| A6C25 | 0180-1085 | 5 | | CAPACITOR-FXD 4.7UF 16VDC TA | 28480 | 0180-1085 |
| A6C32 | 0140-0197 | 4 | 1 | CAPACITOR-FXD 180PF +-5% 300VDC MICA | 72136 | DM15F181J0300WV1CR |
| A6C33 | 0180-1704 | 5 | | CAPACITOR-FXD 47UF+-10% 6VDC TA | 56289 | 150D476X9006B2 |
| A6C34 | 0160-2150 | 5 | | CAPACITOR-FXD 33PF +-5% 300VDC MICA | 28480 | 0160-2150 |
| A6C35 | 0180-0291 | 3 | | CAPACITOR-FXD 1UF+-10% 35VDC TA | 56289 | 150D105X9035A2 |
| A6C37 | 0160-2150 | 5 | | CAPACITOR-FXD 33PF +-5% 300VDC MICA | 28480 | 0160-2150 |
| A6C38 | 0180-0291 | 3 | | CAPACITOR-FXD 1UF+-10% 35VDC TA | 56289 | 150D105X9035A2 |
| A6CR1 | 1902-0041 | 4 | | DIODE-ZNR 5.11V 5% DO-35 PD=.4W | 28480 | 1902-0041 |
| A6CR2 | 1901-0040 | 1 | | DIODE-SWITCHING 30V 50MA 2NS DO-35 | 28480 | 1901-0040 |
| A6CR3 | 1901-0040 | 1 | | DIODE-SWITCHING 30V 50MA 2NS DO-35 | 28480 | 1901-0040 |
| A6CR4 | 1901-0518 | 8 | | DIODE-SM SIG SCHOTTKY | 28480 | 1901-0518 |
| A6CR5 | 1901-0518 | 8 | | DIODE-SM SIG SCHOTTKY | 28480 | 1901-0518 |
| A6CR6 | 1901-0518 | 8 | | DIODE-SM SIG SCHOTTKY | 28480 | 1901-0518 |
| A6DS1 | 1990-0486 | 6 | | LED-VISIBLE LUM-INT=1MCD IF=20MA-MAX | 28480 | 5082-4684 |
| A6J1 | 1251-3025 | 9 | 1 | CONNECTOR 34-PIN M RECTANGULAR | 28480 | 1251-3025 |
| A6J2 | 1200-0607 | 0 | | SOCKET-IC 16-CONT DIP DIP-SLDR | 28480 | 1200-0607 |
| A6J3 | 1200-0607 | 0 | | SOCKET-IC 16-CONT DIP DIP-SLDR | 28480 | 1200-0607 |
| A6J4 | 1200-0541 | 1 | | SOCKET-IC 24-CONT DIP DIP-SLDR | 28480 | 1200-0541 |
| A6J5 | 1200-0541 | 1 | | SOCKET-IC 24-CONT DIP DIP-SLDR | 28480 | 1200-0541 |
| A6J6 | 1251-3196 | 5 | 2 | CONNECTOR 8-PIN M POST TYPE | 28480 | 1251-3196 |
| A6J7 | 1251-3004 | 4 | 1 | CONNECTOR 40-PIN M RECTANGULAR | 28480 | 1251-3004 |
| A6J8 | 1250-0257 | 1 | | CONNECTOR-RF SMB M PC 50-OHM | 28480 | 1250-0257 |
| A6J9 | 1200-0654 | 7 | 2 | SOCKET-IC 40-CONT DIP DIP-SLDR | 28480 | 1200-0654 |
| A6J10 | 1200-0607 | 0 | | SOCKET-IC 16-CONT DIP DIP-SLDR | 28480 | 1200-0607 |
| A6J11 | 1200-0638 | 7 | | SOCKET-IC 14-CONT DIP DIP-SLDR | 28480 | 1200-0638 |
| A6J12 | 1200-0639 | 8 | 5 | SOCKET-IC 20-CONT DIP DIP-SLDR | 28480 | 1200-0639 |
| A6J13 | 1200-0638 | 7 | | SOCKET-IC 14-CONT DIP DIP-SLDR | 28480 | 1200-0638 |
| A6J14 | 1200-0638 | 7 | | SOCKET-IC 14-CONT DIP DIP-SLDR | 28480 | 1200-0638 |
| A6J15 | 1200-0607 | 0 | | SOCKET-IC 16-CONT DIP DIP-SLDR | 28480 | 1200-0607 |
| A6J16 | 1200-0638 | 7 | | SOCKET-IC 14-CONT DIP DIP-SLDR | 28480 | 1200-0638 |
| A6J17 | 1200-0639 | 8 | | SOCKET-IC 20-CONT DIP DIP-SLDR | 28480 | 1200-0639 |
| A6J18 | 1200-0639 | 8 | | SOCKET-IC 20-CONT DIP DIP-SLDR | 28480 | 1200-0639 |
| A6J19 | 1200-0639 | 8 | | SOCKET-IC 20-CONT DIP DIP-SLDR | 28480 | 1200-0639 |
| A6J20 | 1200-0607 | 0 | | SOCKET-IC 16-CONT DIP DIP-SLDR | 28480 | 1200-0607 |
| A6J21 | 1200-0639 | 8 | | SOCKET-IC 20-CONT DIP DIP-SLDR | 28480 | 1200-0639 |
| A6J22 | 1200-0539 | 7 | 4 | SOCKET-IC 18-CONT DIP DIP-SLDR | 28480 | 1200-0539 |
| A6J23 | 1200-0539 | 7 | | SOCKET-IC 18-CONT DIP DIP-SLDR | 28480 | 1200-0539 |
| A6J24 | 1200-0539 | 7 | | SOCKET-IC 18-CONT DIP DIP-SLDR | 28480 | 1200-0539 |
| A6J25 | 1200-0539 | 7 | | SOCKET-IC 18-CONT DIP DIP-SLDR | 28480 | 1200-0539 |
| A6J26 | 1200-0541 | 1 | | SOCKET-IC 24-CONT DIP DIP-SLDR | 28480 | 1200-0541 |
| A6J37 | 1200-0541 | 1 | | SOCKET-IC 24-CONT DIP DIP-SLDR | 28480 | 1200-0541 |
| A6J40 | 1200-0607 | 0 | | SOCKET-IC 16-CONT DIP DIP-SLDR | 28480 | 1200-0607 |
| A6J41 | 1200-0607 | 0 | | SOCKET-IC 16-CONT DIP DIP-SLDR | 28480 | 1200-0607 |
| A6J42 | 1200-0607 | 0 | | SOCKET-IC 16-CONT DIP DIP-SLDR | 28480 | 1200-0607 |
| A6J43 | 1200-0607 | 0 | | SOCKET-IC 16-CONT DIP DIP-SLDR | 28480 | 1200-0607 |
| A6J44 | 1200-0607 | 0 | | SOCKET-IC 16-CONT DIP DIP-SLDR | 28480 | 1200-0607 |
| A6J45 | 1200-0654 | 7 | | SOCKET-IC 40-CONT DIP DIP-SLDR | 28480 | 1200-0654 |
| A6L1 | 9140-0401 | 2 | 1 | COIL-FXD 64 UH | 28480 | 9140-0401 |

See introduction to this section for ordering information
*Indicates factory selected value

## Table 6-3. Replaceable Parts

| Reference Designation | HP Part Number | C D | Qty | Description | Mfr Code | Mfr Part Number |
|---|---|---|---|---|---|---|
| A6Q1 | 1854-0019 | 3 | 5 | TRANSISTOR NPN SI TO-18 PD=360MW | 28480 | 1854-0019 |
| A6Q2 | 1853-0015 | 7 | 2 | TRANSISTOR PNP SI PD=200MW FT=500MHZ | 28480 | 1853-0015 |
| A6Q3 | 1853-0015 | 7 | | TRANSISTOR PNP SI PD=200MW FT=500MHZ | 28480 | 1853-0015 |
| A6R1 | 1810-0269 | 3 | | NETWORK-RES 9-SIP10.0K OHM X 8 | 28480 | 1810-0269 |
| A6R2 | 0683-4725 | 2 | | RESISTOR 4.7K 5% .25W FC TC=-400/+700 | 01121 | CB4725 |
| A6R3 | 0683-4725 | 2 | | RESISTOR 4.7K 5% .25W FC TC=-400/+700 | 01121 | CB4725 |
| A6R4 | 1810-0269 | 3 | | NETWORK-RES 9-SIP10.0K OHM X 8 | 28480 | 1810-0269 |
| A6R5 | 1810-0269 | 3 | | NETWORK-RES 9-SIP10.0K OHM X 8 | 28480 | 1810-0269 |
| A6R7 | 0683-4725 | 2 | | RESISTOR 4.7K 5% .25W FC TC=-400/+700 | 01121 | CB4725 |
| A6R8 | 0683-4725 | 2 | | RESISTOR 4.7K 5% .25W FC TC=-400/+700 | 01121 | CB4725 |
| A6R10 | 0683-4735 | 4 | | RESISTOR 47K 5% .25W FC TC=-400/+800 | 01121 | CB4735 |
| A6R11 | 0683-4735 | 4 | | RESISTOR 47K 5% .25W FC TC=-400/+800 | 01121 | CB4735 |
| A6R20 | 0683-1045 | 3 | | RESISTOR 100K 5% .25W FC TC=-400/+800 | 01121 | CB1045 |
| A6R21 | 0683-1045 | 3 | | RESISTOR 100K 5% .25W FC TC=-400/+800 | 01121 | CB1045 |
| A6R22 | 0683-1045 | 3 | | RESISTOR 100K 5% .25W FC TC=-400/+800 | 01121 | CB1045 |
| A6R30 | 0683-4725 | 2 | | RESISTOR 4.7K 5% .25W FC TC=-400/+700 | 01121 | CB4725 |
| A6R31 | 0683-4725 | 2 | | RESISTOR 4.7K 5% .25W FC TC=-400/+700 | 01121 | CB4725 |
| A6R32 | 0683-4725 | 2 | | RESISTOR 4.7K 5% .25W FC TC=-400/+700 | 01121 | CB4725 |
| A6R33 | 1810-0269 | 3 | | NETWORK-RES 9-SIP10.0K OHM X 8 | 28480 | 1810-0269 |
| A6R34 | 0683-1015 | 7 | | RESISTOR 100 5% .25W FC TC=-400/+500 | 01121 | CB1015 |
| A6R35 | 0683-1025 | 9 | | RESISTOR 1K 5% .25W FC TC=-400/+600 | 01121 | CB1025 |
| A6R36 | 0683-4725 | 2 | | RESISTOR 4.7K 5% .25W FC TC=-400/+700 | 01121 | CB4725 |
| A6R37 | 0683-3325 | 6 | | RESISTOR 3.3K 5% .25W FC TC=-400/+700 | 01121 | CB3325 |
| A6R38 | 0683-3325 | 6 | | RESISTOR 3.3K 5% .25W FC TC=-400/+700 | 01121 | CB3325 |
| A6R39 | 0683-3325 | 6 | | RESISTOR 3.3K 5% .25W FC TC=-400/+700 | 01121 | CB3325 |
| A6R40 | 0683-1055 | 5 | 1 | RESISTOR 1M 5% .25W FC TC=-800/+900 | 01121 | CB1055 |
| A6R41 | 0683-1065 | 7 | | RESISTOR 10M 5% .25W CC TC=-900/+1100 | 01121 | CB1065 |
| A6R42 | 0683-1025 | 9 | | RESISTOR 1K 5% .25W FC TC=-400/+600 | 01121 | CB1025 |
| A6R43 | 0683-1025 | 9 | | RESISTOR 1K 5% .25W FC TC=-400/+600 | 01121 | CB1025 |
| A6R44 | 0683-4725 | 2 | | RESISTOR 4.7K 5% .25W FC TC=-400/+700 | 01121 | CB4725 |
| A6R45 | 0683-4705 | 8 | | RESISTOR 47 5% .25W FC TC=-400/+500 | 01121 | CB4705 |
| A6R46 | 0698-0082 | | | RESISTOR 464 1% | | |
| A6S1 | 3101-1856 | 5 | 3 | SWITCH-SL 8-1A DIP-SLIDE-ASSY .1A 50VDC | 28480 | 3101-1856 |
| A6S2 | 3101-1856 | 5 | | SWITCH-SL 8-1A DIP-SLIDE-ASSY .1A 50VDC | 28480 | 3101-1856 |
| A6S4 | 1251-4822 | 6 | | CONNECTOR 3-PIN M POST TYPE | 28480 | 1251-4822 |
| A6S5 | 1251-4822 | 6 | | CONNECTOR 3-PIN M POST TYPE | 28480 | 1251-4822 |
| A6S6 | 1251-4822 | 6 | | CONNECTOR 3-PIN M POST TYPE | 28480 | 1251-4822 |
| A6U1 | 1820-2058 | 3 | 4 | IC MISC TTL S QUAD | 28480 | 1820-2058 |
| A6U2 | 1820-2058 | 3 | | IC MISC TTL S QUAD | 28480 | 1820-2058 |
| A6U3 | 1820-2058 | 3 | | IC MISC TTL S QUAD | 28480 | 1820-2058 |
| A6U4 | 1820-2058 | 3 | | IC MISC TTL S QUAD | 28480 | 1820-2058 |
| A6U5 | 1820-1199 | 1 | | IC INV TTL LS HEX 1-INP | 01295 | SN74LS04N |
| A6U6 | 1820-1759 | 9 | 8 | IC BFR TTL LS NON-INV OCTL | 27014 | DM81LS97N |
| A6U7 | 1820-2549 | 5 | 1 | IC-8291A | 28480 | |
| A6U8 | 1820-1216 | 3 | 6 | IC DCDR TTL LS 3-TO-8-LINE 3-INP | 01295 | SN74LS138N |
| A6U9 | 1820-1759 | 9 | | IC BFR TTL LS NON-INV OCTL | 27014 | DM81LS97N |
| A6U10 | 1820-1759 | 9 | | IC BFR TTL LS NON-INV OCTL | 27014 | DM81LS97N |
| A6U11 | 1820-1196 | 8 | | IC FF TTL LS D-TYPE POS-EDGE-TRIG COM | 01295 | SN74LS174N |
| A6U13 | 1820-1278 | 7 | | IC CNTR TTL LS BIN UP/DOWN SYNCHRO | 01295 | SN74LS191N |
| A6U14 | 1820-1201 | 6 | 3 | IC GATE TTL LS AND QUAD 2-INP | 01295 | SN74LS08N |
| A6U15 | 1820-1416 | 5 | | IC SCHMITT-TRIG TTL LS INV HEX 1-INP | 01295 | SN74LS14N |
| A6U16 | 1820-1197 | 9 | | IC GATE TTL LS NAND QUAD 2-INP | 01295 | SN74LS00N |
| A6U17 | 1820-1112 | 8 | | IC FF TTL LS D-TYPE POS-EDGE-TRIG | 01295 | SN74LS74AN |
| A6U18 | 1820-1478 | 9 | 1 | IC CNTR TTL LS BIN ASYNCHRO | 01295 | SN74LS93N |
| A6U19 | 1820-1199 | 1 | | IC INV TTL LS HEX 1-INP | 01295 | SN74LS04N |
| A6U20 | 1820-1490 | 5 | 1 | IC CNTR TTL LS DECD ASYNCHRO | 01295 | SN74LS90N |
| A6U21 | 1820-0751 | 9 | 1 | IC CNTR TTL DECD NEG-EDGE-TRIG PRESET | 01295 | SN74196N |
| A6U23 | 1820-1430 | 3 | | IC CNTR TTL LS BIN SYNCHRO POS-EDGE-TRIG | 01295 | SN74LS161AN |
| A6U24 | 1820-1197 | 9 | | IC GATE TTL LS NAND QUAD 2-INP | 01295 | SN74LS00N |
| A6U30 | 1820-1730 | 6 | 5 | IC FF TTL LS D-TYPE POS-EDGE-TRIG COM | 01295 | SN74LS273N |
| A6U31 | 1820-1730 | 6 | | IC FF TTL LS D-TYPE POS-EDGE-TRIG COM | 01295 | SN74LS273N |
| A6U32 | 1820-1759 | 9 | | IC BFR TTL LS NON-INV OCTL | 27014 | DM81LS97N |
| A6U33 | 1820-1730 | 6 | | IC FF TTL LS D-TYPE POS-EDGE-TRIG COM | 01295 | SN74LS273N |
| A6U34 | 1820-1199 | 1 | | IC INV TTL LS HEX 1-INP | 01295 | SN74LS04N |
| A6U35 | 1820-1201 | 6 | | IC GATE TTL LS AND QUAD 2-INP | 01295 | SN74LS08N |
| A6U36 | 1820-1197 | 9 | | IC GATE TTL LS NAND QUAD 2-INP | 01295 | SN74LS00N |
| A6U37 | 1820-1278 | 7 | | IC CNTR TTL LS BIN UP/DOWN SYNCHRO | 01295 | SN74LS191N |
| A6U38 | 1820-1278 | 7 | | IC CNTR TTL LS BIN UP/DOWN SYNCHRO | 01295 | SN74LS191N |
| A6U39 | 1820-1278 | 7 | | IC CNTR TTL LS BIN UP/DOWN SYNCHRO | 01295 | SN74LS191N |
| A6U40 | 1820-1423 | 4 | 1 | IC MV TTL LS MONOSTBL RETRIG DUAL | 01295 | SN74LS123N |
| A6U41 | 1820-1112 | 8 | | IC FF TTL LS D-TYPE POS-EDGE-TRIG | 01295 | SN74LS74AN |
| A6U42 | 1820-1112 | 8 | | IC FF TTL LS D-TYPE POS-EDGE-TRIG | 01295 | SN74LS74AN |
| A6U43 | 1820-1112 | 8 | | IC FF TTL LS D-TYPE POS-EDGE-TRIG | 01295 | SN74LS74AN |
| A6U44 | 1820-1216 | 3 | | IC DCDR TTL LS 3-TO-8-LINE 3-INP | 01295 | SN74LS138N |
| A6U45 | 1820-1197 | 9 | | IC GATE TTL LS NAND QUAD 2-INP | 01295 | SN74LS00N |
| A6U46 | 1820-1278 | 7 | | IC CNTR TTL LS BIN UP/DOWN SYNCHRO | 01295 | SN74LS191N |
| A6U47 | 1820-1112 | 8 | | IC FF TTL LS D-TYPE POS-EDGE-TRIG | 01295 | SN74LS74AN |

See introduction to this section for ordering information
*Indicates factory selected value

## Table 6-3. Replaceable Parts

| Reference Designation | HP Part Number | C D | Qty | Description | Mfr Code | Mfr Part Number |
|---|---|---|---|---|---|---|
| A6U48 | 1820-1278 | 7 | | IC CNTR TTL LS BIN UP/DOWN SYNCHRO | 01295 | SN74LS191N |
| A6U49 | 1820-1278 | 7 | | IC CNTR TTL LS BIN UP/DOWN SYNCHRO | 01295 | SN74LS191N |
| A6U50 | 1820-1278 | 7 | | IC CNTR TTL LS BIN UP/DOWN SYNCHRO | 01295 | SN74LS191N |
| A6U51 | 1820-1278 | 7 | | IC CNTR TTL LS BIN UP/DOWN SYNCHRO | 01295 | SN74LS191N |
| A6U52 | 1820-1278 | 7 | | IC CNTR TTL LS BIN UP/DOWN SYNCHRO | 01295 | SN74LS191N |
| A6U53 | 1820-1278 | 7 | | IC CNTR TTL LS BIN UP/DOWN SYNCHRO | 01295 | SN74LS191N |
| A6U54 | 1820-1759 | 9 | | IC BFR TTL LS NON-INV OCTL | 27014 | DM81LS97N |
| A6U55 | 1820-1278 | 7 | | IC CNTR TTL LS BIN UP/DOWN SYNCHRO | 01295 | SN74LS191N |
| A6U56 | 1820-1759 | 9 | | IC BFR TTL LS NON-INV OCTL | 27014 | DM81LS97N |
| A6U57 | 1820-1278 | 7 | | IC CNTR TTL LS BIN UP/DOWN SYNCHRO | 01295 | SN74LS191N |
| A6U58 | 1820-1759 | 9 | | IC BFR TTL LS NON-INV OCTL | 27014 | DM81LS97N |
| A6U60 | 1820-1240 | 3 | 1 | IC DCDR TTL S 3-TO-8-LINE 3-INP | 01295 | SN74S138N |
| A6U61 | 1820-1199 | 1 | | IC INV TTL LS HEX 1-INP | 01295 | SN74LS04N |
| A6U62 | 1820-1195 | 7 | 1 | IC FF TTL LS D-TYPE POS-EDGE-TRIG COM | 01295 | SN74LS175N |
| A6U63 | 1820-1975 | 1 | 1 | IC SHF-RGTR TTL LS NEG-EDGE-TRIG PRL-IN | 01295 | SN74LS165N |
| A6U64 | 1820-1278 | 7 | | IC CNTR TTL LS BIN UP/DOWN SYNCHRO | 01295 | SN74LS191N |
| A6U65 | 1820-1196 | 8 | | IC FF TTL LS D-TYPE POS-EDGE-TRIG COM | 01295 | SN74LS174N |
| A6U66 | 1820-1197 | 9 | | IC GATE TTL LS NAND QUAD 2-INP | 01295 | SN74LS00N |
| A6U67 | 1820-1199 | 1 | | IC INV TTL LS HEX 1-INP | 01295 | SN74LS04N |
| A6U68 | 1820-2075 | 4 | 1 | IC MISC TTL LS | 01295 | SN74LS245N |
| A6U69 | 1820-1202 | 7 | | IC GATE TTL LS NAND TPL 3-INP | 01295 | SN74LS10N |
| A6U70 | 1818-1330 | 7 | 4 | IC CMOS 4096 (4K) RAM STAT 300-NS 3-S | 0003J | UPD444C-1 |
| A6U71 | 1818-1330 | 7 | | IC CMOS 4096 (4K) RAM STAT 300-NS 3-S | 0003J | UPD444C-1 |
| A6U72 | 1818-1330 | 7 | | IC CMOS 4096 (4K) RAM STAT 300-NS 3-S | 0003J | UPD444C-1 |
| A6U73 | 1818-1330 | 7 | | IC CMOS 4096 (4K) RAM STAT 300-NS 3-S | 0003J | UPD444C-1 |
| A6U74 | 04192-85001 | 9 | 1 | IC-PROM PROGRAMMED | 28480 | 04192-85001 |
| A6U75 | 04192-85002 | 9 | 1 | IC-PROM PROGRAMMED | 28480 | 04192-85002 |
| A6U76 | 04192-85103 | 6 | 1 | IC-PROM PROGRAMMED | 28480 | 04192-85103 |
| A6U77 | 04192-85004 | 8 | 1 | IC-PROM PROGRAMMED | 28480 | 04192-85004 |
| A6U78 | 04192-85005 | 5 | 1 | IC-PROM PROGRAMMED | 28480 | 04192-85005 |
| A6U79 | 04192-85006 | 7 | 1 | IC-PROM PROGRAMMED | 28480 | 04192-85006 |
| A6U80 | 04192-85007 | 2 | 1 | IC-PROM PROGRAMMED | 28480 | 04192-85007 |
| A6U81 | 04192-85008 | 6 | 1 | IC-PROM PROGRAMMED | 28480 | 04192-85008 |
| A6U82 | 04192-85009 | 1 | 1 | IC-PROM PROGRAMMED | 28480 | 04192-85009 |
| A6U83 | 04192-85010 | 5 | 1 | IC-PROM PROGRAMMED | 28480 | 04192-85010 |
| A6U84 | 04192-85111 | 0 | 1 | IC-PROM PROGRAMMED | 28480 | 04192-85111 |
| A6U85 | 04192-85012 | 4 | 1 | IC-PROM PROGRAMMED | 28480 | 04192-85012 |
| A6U86 | 04192-85113 | 8 | 1 | IC-PROM PROGRAMMED | 28480 | 04192-85113 |
| A6U87 | 04192-85114 | 7 | 1 | IC-PROM PROGRAMMED | 28480 | 04192-85114 |
| A6U90 | 1820-0628 | 9 | 4 | IC TTL 64-BIT RAM STAT 60-NS 0-C | 01295 | SN7489N |
| A6U91 | 1820-0628 | 9 | | IC TTL 64-BIT RAM STAT 60-NS 0-C | 01295 | SN7489N |
| A6U92 | 1820-0545 | 9 | 1 | IC CNTR TTL BIN UP/DOWN SYNCHRO | 01295 | SN74191N |
| A6U93 | 1820-0628 | 9 | | IC TTL 64-BIT RAM STAT 60-NS 0-C | 01295 | SN7489N |
| A6U94 | 1820-0628 | 9 | | IC TTL 64-BIT RAM STAT 60-NS 0-C | 01295 | SN7489N |
| A6U95 | 1820-1074 | 1 | | IC DRVR TTL NOR QUAD 2-INP | 01295 | SN74128N |
| A6U96 | 1820-1202 | 7 | | IC GATE TTL LS NAND TPL 3-INP | 01295 | SN74LS10N |
| A6U97 | 1820-1199 | 1 | | IC INV TTL LS HEX 1-INP | 01295 | SN74LS04N |
| A6U98 | 1820-1416 | 5 | | IC SCHMITT-TRIG TTL LS INV HEX 1-INP | 01295 | SN74LS14N |
| A6U99 | 1820-1112 | 8 | | IC FF TTL LS D-TYPE POS-EDGE-TRIG | 01295 | SN74LS74AN |
| A6U100 | 1820-1201 | 6 | | IC GATE TTL LS AND QUAD 2-INP | 01295 | SN74LS08N |
| A6U101 | 1820-1759 | 9 | | IC BFR TTL LS NON-INV OCTL | 27014 | DM81LS97N |
| A6U102 | 1820-1112 | 8 | | IC FF TTL LS D-TYPE POS-EDGE-TRIG | 01295 | SN74LS74AN |
| A6U103 | 1820-1200 | 5 | | IC INV TTL LS HEX | 01295 | SN74LS05N |
| A6U104 | 1820-1491 | 6 | 2 | IC BFR TTL LS NON-INV HEX 1-INP | 01295 | SN74LS367AN |
| A6U105 | 1820-1216 | 3 | | IC DCDR TTL LS 3-TO-8-LINE 3-INP | 01295 | SN74LS138N |
| A6U106 | 1820-1207 | 2 | 1 | IC GATE TTL LS NAND 8-INP | 01295 | SN74LS30N |
| A6U107 | 1820-1216 | 3 | | IC DCDR TTL LS 3-TO-8-LINE 3-INP | 01295 | SN74LS138N |
| A6U108 | 1820-1199 | 1 | | IC INV TTL LS HEX 1-INP | 01295 | SN74LS04N |
| A6U109 | 1820-1491 | 6 | | IC BFR TTL LS NON-INV HEX 1-INP | 01295 | SN74LS367AN |
| A6U110 | 1820-1216 | 3 | | IC DCDR TTL LS 3-TO-8-LINE 3-INP | 01295 | SN74LS138N |
| A6U111 | 1820-1216 | 3 | | IC DCDR TTL LS 3-TO-8-LINE 3-INP | 01295 | SN74LS138N |
| A6U112 | 1820-2024 | 3 | 2 | IC DRVR TTL LS LINE DRVR OCTL | 01295 | SN74LS244N |
| A6U113 | 1820-2024 | 3 | | IC DRVR TTL LS LINE DRVR OCTL | 01295 | SN74LS244N |
| A6U114 | 1820-2358 | 6 | 1 | IC-68B00 | 28480 | 1820-2358 |
| A6U115 | 1820-1416 | 5 | | IC SCHMITT-TRIG TTL LS INV HEX 1-INP | 01295 | SN74LS14N |
| A6U116 | 1820-1197 | 9 | | IC GATE TTL LS NAND QUAD 2-INP | 01295 | SN74LS00N |
| A6U117 | 1820-0661 | 0 | 1 | IC GATE TTL OR QUAD 2-INP | 01295 | SN7432N |
| A6W1 | 8159-0005 | 0 | | WIRE 22AWG W PVC 1X22 80C | 28480 | 8159-0005 |
| A6W2 | 8159-0005 | 0 | | WIRE 22AWG W PVC 1X22 80C | 28480 | 8159-0005 |
| A6W3 | 1251-4787 | 2 | 2 | SHUNT-DIP 8-POSITION | 28480 | 1251-4787 |
| A6W5 | 8159-0005 | 0 | | WIRE 22AWG W PVC 1X22 80C | 28480 | 8159-0005 |
| | 0160-5186 | 3 | 5 | NETWORK-CAPACITOR | 28480 | 0160-5186 |
| | 0340-0220 | 8 | | BEADS | 28480 | 0340-0220 |
| | 1258-0141 | 8 | | JUMPER-REM | 28480 | 1258-0141 |
| | 3050-0082 | 8 | | WASHER-FL NM NO. 4 .116-IN-ID .188-IN-OD | 28480 | 3050-0082 |
| | 8150-0143 | 9 | | WIRE 22AWG W/V 300V PVC 7X30 105C | 28480 | 8150-0143 |

See introduction to this section for ordering information
*Indicates factory selected value

## Table 6-3. Replaceable Parts

| Reference Designation | HP Part Number | C D | Qty | Description | Mfr Code | Mfr Part Number |
|---|---|---|---|---|---|---|
| A7 | 04192-66507 | 5 | 1 | POWER SUPPLY BOARD ASSEMBLY (NOT INCLUDING THE SHIELD CASES) | 28480 | 04192-66507 |
| A7C1 | 0180-1075 | 3 | 3 | CAPACITOR-FXD 2200 UF 16VDC AL | 28480 | 0180-1075 |
| A7C2 | 0180-1075 | 3 | | CAPACITOR-FXD 2200 UF 16VDC AL | 28480 | 0180-1075 |
| A7C3 | 0160-2055 | 9 | | CAPACITOR-FXD .01UF +80-20% 100VDC CER | 28480 | 0160-2055 |
| A7C4 | 0180-1050 | 4 | | CAPACITOR-FXD 100UF 25VDC | 28480 | 0180-1050 |
| A7C5 | 0180-1075 | 3 | | CAPACITOR-FXD 2200 UF 16VDC AL | 28480 | 0180-1075 |
| A7C6 | 0180-0291 | 3 | | CAPACITOR-FXD 1UF+-10% 35VDC TA | 56289 | 150D105X9035A2 |
| A7C7 | 0180-0229 | 7 | | CAPACITOR-FXD 33UF+-10% 10VDC TA | 56289 | 150D336X9010B2 |
| A7C8 | 0180-2980 | 1 | 4 | CAPACITOR-FXD 1000UF+-20% 35VDC AL | 28480 | 0180-2980 |
| A7C9 | 0180-3036 | 0 | 4 | CAPACITOR-FXD 220UF+100-10% 200VDC AL | 28480 | 0180-3036 |
| A7C10 | 0180-3036 | 0 | | CAPACITOR-FXD 220UF+100-10% 200VDC AL | 28480 | 0180-3036 |
| A7C11 | 0180-3036 | 0 | | CAPACITOR-FXD 220UF+100-10% 200VDC AL | 28480 | 0180-3036 |
| A7C12 | 0180-3036 | 0 | | CAPACITOR-FXD 220UF+100-10% 200VDC AL | 28480 | 0180-3036 |
| A7C13 | 0180-1050 | 4 | | CAPACITOR-FXD 100UF 25VDC | 28480 | 0180-1050 |
| A7C14 | 0180-2980 | 1 | | CAPACITOR-FXD 1000UF+-20% 35VDC AL | 28480 | 0180-2980 |
| A7C15 | 0180-0197 | 8 | 2 | CAPACITOR-FXD 2.2UF+-10% 20VDC TA | 56289 | 150D225X9020A2 |
| A7C16 | 0160-3969 | 6 | 3 | CAPACITOR-FXD .015UF +-20PF 250VAC(RMS) | 28480 | 0160-3969 |
| A7C17 | 0160-3456 | 6 | | CAPACITOR-FXD 1000PF +-10% 1KVDC CER | 28480 | 0160-3456 |
| A7C18 | 0160-3456 | 6 | | CAPACITOR-FXD 1000PF +-10% 1KVDC CER | 28480 | 0160-3456 |
| A7C19 | 0160-4834 | 2 | | CAPACITOR-FXD .047UF +-10% 100VDC CER | 28480 | 0160-0127 |
| A7C20 | 0160-0127 | 2 | | CAPACITOR-FXD 1UF +-20% 25VDC CER | 28480 | 0160-0127 |
| A7C21 | 0180-2980 | 1 | | CAPACITOR-FXD 1000UF+-20% 35VDC AL | 28480 | 0180-2980 |
| A7C22 | 0180-1050 | 4 | | CAPACITOR-FXD 100UF 25VDC | 28480 | 0180-1050 |
| A7C23 | 0180-1050 | 4 | | CAPACITOR-FXD 100UF 25VDC | 28480 | 0180-1050 |
| A7C24 | 0160-3969 | 6 | | CAPACITOR-FXD .015UF +-20PF 250VAC(RMS) | 28480 | 0160-3969 |
| A7C25 | 0160-3969 | 6 | | CAPACITOR-FXD .015UF +-20PF 250VAC(RMS) | 28480 | 0160-3969 |
| A7C26 | 0180-3035 | 9 | 4 | CAPACITOR-FXD 10UF+100-10% 350VDC AL | 28480 | 0180-3035 |
| A7C27 | 0180-3035 | 9 | | CAPACITOR-FXD 10UF+100-10% 350VDC AL | 28480 | 0180-3035 |
| A7C28 | 0180-3035 | 9 | | CAPACITOR-FXD 10UF+100-10% 350VDC AL | 28480 | 0180-3035 |
| A7C29 | 0180-3035 | 9 | | CAPACITOR-FXD 10UF+100-10% 350VDC AL | 28480 | 0180-3035 |
| A7C30 | 0160-0127 | 2 | | CAPACITOR-FXD 1UF +-20% 25VDC CER | 28480 | 0160-0127 |
| A7C31 | 0160-3094 | 8 | 2 | CAPACITOR-FXD .1UF +-10% 100VDC CER | 28480 | 0160-3094 |
| A7C32 | 0180-1704 | 5 | | CAPACITOR-FXD 47UF+-10% 6VDC TA | 56289 | 150D476X9006B2 |
| A7C33 | 0160-3914 | 1 | 1 | CAPACITOR-FXD .01UF +-10% 100VDC CER | 28480 | 0160-3914 |
| A7C34 | 0180-1746 | 5 | | CAPACITOR-FXD 15UF+-10% 20VDC TA | 56289 | 150D156X9020B2 |
| A7C35 | 0180-1050 | 4 | | CAPACITOR-FXD 100UF 25VDC | 28480 | 0180-1050 |
| A7C36 | 0160-2055 | 9 | | CAPACITOR-FXD .01UF +80-20% 100VDC CER | 28480 | 0160-2055 |
| A7C37 | 0180-2980 | 1 | | CAPACITOR-FXD 1000UF+-20% 35VDC AL | 28480 | 0180-2980 |
| A7C38 | 0160-0127 | 2 | | CAPACITOR-FXD 1UF +-20% 25VDC CER | 28480 | 0160-0127 |
| A7C39 | 0160-3094 | 8 | | CAPACITOR-FXD .1UF +-10% 100VDC CER | 28480 | 0160-3094 |
| A7C40 | 0160-0945 | 2 | 1 | CAPACITOR-FXD 910PF +-5% 100VDC MICA | 28480 | 0160-0945 |
| A7C41 | 0160-0157 | 8 | 1 | CAPACITOR-FXD 4700PF +-10% 200VDC POLYE | 28480 | 0160-0157 |
| A7C42 | 0160-3694 | 4 | 1 | CAPACITOR-FXD 330PF +-10% 100VDC CER | 28480 | 0160-3694 |
| A7C43 | 0180-1704 | 5 | | CAPACITOR-FXD 47UF+-10% 6VDC TA | 56289 | 150D476X9006B2 |
| A7CR1 | 1906-0080 | 9 | 1 | DIODE-FW BRDG 600V 10A | 28480 | 1906-0080 |
| A7CR2 | 1901-1095 | 8 | 2 | DIODE-PWR RECT 40V 15A DO-4 | 04713 | MBR1540 |
| A7CR3 | 1901-1095 | 8 | | DIODE-PWR RECT 40V 15A DO-4 | 04713 | MBR1540 |
| A7CR4 | 1902-1217 | 8 | 1 | DIODE-ZNR 6.2V 5% DO-4 PD=10W TC=+.035% | 28480 | 1902-1217 |
| A7CR5 | 1902-3059 | 0 | | DIODE-ZNR 3.83V 5% DO-35 PD=.4W | 28480 | 1902-3059 |
| A7CR6 | 1901-0028 | 5 | 3 | DIODE-PWR RECT 400V 750MA DO-29 | 28480 | 1901-0028 |
| A7CR7 | 1902-0041 | 4 | | DIODE-ZNR 5.11V 5% DO-35 PD=.4W | 28480 | 1902-0041 |
| A7CR8 | 1902-1232 | 7 | 1 | DIODE-ZNR 1N3997RA 5.6V 5% DO-4 PD=10W | 04713 | 1N3997RA |
| A7CR9 | 1901-1086 | 7 | 6 | DIODE-PWR RECT 50V 5A 200NS | 04713 | MR820 |
| A7CR10 | 1901-1086 | 7 | | DIODE-PWR RECT 50V 5A 200NS | 04713 | MR820 |
| A7CR11 | 1901-0685 | 7 | | DIODE-PWR RECT 200V 5A 200NS | | |
| A7CR12 | 1901-0685 | 7 | | DIODE-PWR RECT 200V 5A 200NS | | |
| A7CR13 | 1901-0685 | 7 | | DIODE-PWR RECT 200V 5A 200NS | | |
| A7CR14 | 1901-0685 | 7 | | DIODE-PWR RECT 200V 5A 200NS | | |
| A7CR15 | 1901-0662 | 3 | 2 | DIODE-PWR RECT 100V 6A | 04713 | MR751 |
| A7CR16 | 1901-0662 | 3 | | DIODE-PWR RECT 100V 6A | 04713 | MR751 |
| A7CR17 | 1901-1065 | 2 | 4 | DIODE-PWR RECT 1N4936 400V 1A 200NS | 14936 | 1N4936 |
| A7CR18 | 1901-0025 | 2 | 12 | DIODE-GEN PRP 100V 200MA DO-7 | 28480 | 1901-0025 |
| A7CR19 | 1901-0025 | 2 | | DIODE-GEN PRP 100V 200MA DO-7 | 28480 | 1901-0025 |
| A7CR20 | 1901-0025 | 2 | | DIODE-GEN PRP 100V 200MA DO-7 | 28480 | 1901-0025 |
| A7CR21 | 1901-0025 | 2 | | DIODE-GEN PRP 100V 200MA DO-7 | 28480 | 1901-0025 |
| A7CR22 | 1902-0041 | 4 | | DIODE-ZNR 5.11V 5% DO-35 PD=.4W | 28480 | 1902-0041 |
| A7CR23 | 1902-0041 | 4 | | DIODE-ZNR 5.11V 5% DO-35 PD=.4W | 28480 | 1902-0041 |
| A7CR24 | 1901-0025 | 2 | | DIODE-GEN PRP 100V 200MA DO-7 | 28480 | 1901-0025 |
| A7CR25 | 1901-0025 | 2 | | DIODE-GEN PRP 100V 200MA DO-7 | 28480 | 1901-0025 |
| A7CR26 | 1901-0025 | 2 | | DIODE-GEN PRP 100V 200MA DO-7 | 28480 | 1901-0025 |
| A7CR27 | 1902-3256 | 9 | 1 | DIODE-ZNR 23.7V 5% DO-35 PD=.4W | 28480 | 1902-3256 |
| A7CR28 | 1901-0025 | 2 | | DIODE-GEN PRP 100V 200MA DO-7 | 28480 | 1901-0025 |
| A7CR29 | 1901-0025 | 2 | | DIODE-GEN PRP 100V 200MA DO-7 | 28480 | 1901-0025 |
| A7CR30 | 1901-1065 | 2 | | DIODE-PWR RECT 1N4936 400V 1A 200NS | 14936 | 1N4936 |

See introduction to this section for ordering information
*Indicates factory selected value

## Table 6-3. Replaceable Parts

| Reference Designation | HP Part Number | C D | Qty | Description | Mfr Code | Mfr Part Number |
|---|---|---|---|---|---|---|
| A7CR31 | 1901-1065 | 2 | | DIODE-PWR RECT 1N4936 400V 1A 200NS | 14936 | 1N4936 |
| A7CR32 | 1901-1065 | 2 | | DIODE-PWR RECT 1N4936 400V 1A 200NS | 14936 | 1N4936 |
| A7CR33 | 1906-0006 | 9 | 1 | DIODE-FW BRDG 400V 1A | 27777 | VE48 |
| A7CR34 | 1901-0025 | 2 | | DIODE-GEN PRP 100V 200MA DO-7 | 28480 | 1901-0025 |
| A7CR35 | 1901-0025 | 2 | | DIODE-GEN PRP 100V 200MA DO-7 | 28480 | 1901-0025 |
| A7CR36 | 1902-3171 | 7 | 1 | DIODE-ZNR 11V 5% DO-35 PD=.4W TC=+.062% | 28480 | 1902-3171 |
| A7CR37 | 1902-0064 | 1 | 3 | DIODE-ZNR 7.5V 5% DO-35 PD=.4W TC=+.05% | 28480 | 1902-0064 |
| A7CR38 | 1901-0025 | 2 | | DIODE-GEN PRP 100V 200MA DO-7 | 28480 | 1901-0025 |
| A7CR39 | 1901-0025 | | | DIODE-GEN PRP 100V 200MA DO-7 | 28480 | 1901-0025 |
| A7F1 | 2110-0304 | 4 | 1 | FUSE 1.5A 250V TD 1.25X.25 UL | 28480 | 2110-0304 |
| A7F2 | 2110-0360 | 2 | 1 | FUSE .75A 250V TD 1.25X.25 UL | 75915 | 313.750 |
| A7F3 | 2110-0012 | 1 | 1 | FUSE .5A 250V NTD 1.25X.25 UL | 28480 | 2110-0012 |
| A7F4 | 2110-0651 | | | FUSE .5A | | |
| A7J1 | 1251-3837 | 1 | 1 | CONNECTOR 4-PIN M UTILITY | 28480 | 1251-3837 |
| A7J2 | 1251-4246 | 8 | 1 | CONNECTOR 3-PIN M POST TYPE | 28480 | 1251-4246 |
| A7J3 | 1251-3196 | 5 | | CONNECTOR 8-PIN M POST TYPE | 28480 | 1251-3196 |
| A7J4 | 1251-3197 | 6 | | CONNECTOR 12-PIN M POST TYPE | 28480 | 1251-3197 |
| A7J5 | 1251-3198 | 7 | 1 | CONNECTOR 15-PIN M POST TYPE | 28480 | 1251-3198 |
| A7K1 | 0490-1312 | 9 | 1 | RELAY 1C 6VDC-COIL 1A 115VAC | | |
| A7L1 | 9100-3139 | 5 | 4 | INDUCTOR 75UH 15% .5DX.875LG | 28480 | 9100-3139 |
| A7L2 | 9140-0462 | 5 | 1 | INDUCTOR 355UH | 28480 | 9140-0462 |
| A7L3 | 9100-3139 | 5 | | INDUCTOR 75UH 15% .5DX.875LG | 28480 | 9100-3139 |
| A7L4 | 9140-0464 | 7 | 1 | INDUCTOR 446UH | 28480 | 9140-0464 |
| A7L5 | 9140-0465 | 8 | 1 | INDUCTOR 833UH | 28480 | 9140-0465 |
| A7L6 | 9100-3139 | 5 | | INDUCTOR 75UH 15% .5DX.875LG | 28480 | 9100-3139 |
| A7L7 | 9100-3139 | 5 | | INDUCTOR 75UH 15% .5DX.875LG | 28480 | 9100-3139 |
| A7L8 | 9140-0463 | 6 | 1 | INDUCTOR 10MH 6% | 28480 | 9140-0463 |
| A7L9 | 9140-0210 | 1 | 6 | INDUCTOR RF-CH-MLD 100UH 5% .166DX.385LG | 28480 | 9140-0210 |
| A7L10 | 9140-0171 | 3 | 2 | INDUCTOR RF-CH-MLD 40UH 10% .296DX.968LG | 28480 | 9140-0171 |
| A7L11 | 9140-0171 | 3 | | INDUCTOR RF-CH-MLD 40UH 10% .296DX.968LG | 28480 | 9140-0171 |
| A7Q1 | 1854-0215 | 1 | | TRANSISTOR NPN SI PD=350MW FT=300MHZ | 04713 | 2N3904 |
| A7Q2 | 1853-0012 | 4 | | TRANSISTOR PNP 2N2904A SI TO-39 PD=600MW | 01295 | 2N2904A |
| A7Q3 | 1854-0215 | 1 | | TRANSISTOR NPN SI PD=350MW FT=300MHZ | 04713 | 2N3904 |
| A7Q4 | 1853-0344 | 5 | 1 | TRANSISTOR PNP 2N5876 SI TO-3 PD=150W | 04713 | 2N5876 |
| A7Q5 | 1853-0012 | 4 | | TRANSISTOR PNP 2N2904A SI TO-39 PD=600MW | 01295 | 2N2904A |
| A7Q6 | 1854-0624 | 6 | 2 | TRANSISTOR NPN 2N6308 SI TO-3 PD=125W | 04713 | 2N6308 |
| A7Q7 | 1854-0624 | 6 | | TRANSISTOR NPN 2N6308 SI TO-3 PD=125W | 04713 | 2N6308 |
| A7Q8 | 1853-0012 | 4 | | TRANSISTOR PNP 2N2904A SI TO-39 PD=600MW | 01295 | 2N2904A |
| A7Q9 | 1854-0013 | 7 | 2 | TRANSISTOR NPN 2N2218A SI TO-5 PD=800MW | 04713 | 2N2218A |
| A7Q10 | 1854-0389 | 0 | 1 | TRANSISTOR NPN 2N4922 SI PD=30W FT=3MHZ | 04713 | 2N4922 |
| A7Q11 | 1854-0215 | 1 | | TRANSISTOR NPN SI PD=350MW FT=300MHZ | 04713 | 2N3904 |
| A7Q12 | 1854-0215 | 1 | | TRANSISTOR NPN SI PD=350MW FT=300MHZ | 04713 | 2N3904 |
| A7Q13 | 1854-0215 | 1 | | TRANSISTOR NPN SI PD=350MW FT=300MHZ | 04713 | 2N3904 |
| A7Q14 | 1853-0036 | 2 | | TRANSISTOR PNP SI PD=310MW FT=250MHZ | 28480 | 1853-0036 |
| A7Q15 | 1853-0012 | 4 | | TRANSISTOR PNP 2N2904A SI TO-39 PD=600MW | 01295 | 2N2904A |
| A7Q16 | 1854-0013 | 7 | | TRANSISTOR NPN 2N2218A SI TO-5 PD=800MW | 04713 | 2N2218A |
| A7Q17 | 1854-0215 | 1 | | TRANSISTOR NPN SI PD=350MW FT=300MHZ | 04713 | 2N3904 |
| A7R1 | 0690-1541 | 9 | 6 | RESISTOR 150K 10% 1W CC TC=0+882 | 01121 | GB1541 |
| A7R2 | 0690-1541 | 9 | | RESISTOR 150K 10% 1W CC TC=0+882 | 01121 | GB1541 |
| A7R3 | 0813-0029 | 8 | 1 | RESISTOR 1 3% 3W PW TC=0+-50 | 28480 | 0813-0029 |
| A7R4 | 0699-1058 | 4 | 2 | RESISTOR 22 5% 2W PW TC=0+-400 | | |
| A7R5 | 0699-1058 | 4 | | RESISTOR 22 5% 2W PW TC=0+-400 | | |
| A7R6 | 0683-1015 | 7 | | RESISTOR 100 5% .25W FC TC=-400/+500 | 01121 | CB1015 |
| A7R7 | 0683-1015 | 7 | | RESISTOR 100 5% .25W FC TC=-400/+500 | 01121 | CB1015 |
| A7R8 | 0683-1025 | 9 | | RESISTOR 1K 5% .25W FC TC=-400/+600 | 01121 | CB1025 |
| A7R9 | 0683-4705 | 8 | | RESISTOR 47 5% .25W FC TC=-400/+500 | 01121 | CB4705 |
| A7R10 | 0683-4705 | 8 | | RESISTOR 47 5% .25W FC TC=-400/+500 | 01121 | CB4705 |
| A7R11 | 0757-0399 | 5 | 3 | RESISTOR 82.5 1% .125W F TC=0+-100 | 24546 | C4-1/8-T0-82R5-F |
| A7R12 | 0683-4735 | 4 | | RESISTOR 47K 5% .25W FC TC=-400/+800 | 01121 | CB4735 |
| A7R13 | 0683-1025 | 9 | | RESISTOR 1K 5% .25W FC TC=-400/+600 | 01121 | CB1025 |
| A7R14 | 0757-0401 | 0 | | RESISTOR 100 1% .125W F TC=0+-100 | 24546 | C4-1/8-T0-101-F |
| A7R15 | 0757-0442 | 9 | | RESISTOR 10K 1% .125W F TC=0+-100 | 24546 | C4-1/8-T0-1002-F |
| A7R16 | 0757-0442 | 9 | | RESISTOR 10K 1% .125W F TC=0+-100 | 24546 | C4-1/8-T0-1002-F |
| A7R17 | 0683-2225 | 1 | | RESISTOR 2.2K 5% .25W FC TC=-400/+700 | | |
| A7R18 | 0683-1025 | 9 | | RESISTOR 1K 5% .25W FC TC=-400/+600 | 01121 | CB1025 |
| A7R19 | 0683-3325 | 6 | | RESISTOR 3.3K 5% .25W FC TC=-400/+700 | 01121 | CB3325 |
| A7R20 | 0683-2225 | 3 | | RESISTOR 2.2K 5% .25W FC TC=-400/+700 | 01121 | CB2225 |
| A7R21 | 0683-1035 | 1 | | RESISTOR 10K 5% .25W FC TC=-400/+700 | 01121 | CB1035 |
| A7R22 | 0683-1035 | 1 | | RESISTOR 10K 5% .25W FC TC=-400/+700 | 01121 | CB1035 |
| A7R23 | 0683-4715 | 0 | | RESISTOR 470 5% .25W FC TC=-400/+600 | 01121 | CB4715 |
| A7R24 | 0690-1541 | 9 | | RESISTOR 150K 10% 1W CC TC=0+882 | 01121 | GB1541 |
| A7R25 | 0690-1541 | 9 | | RESISTOR 150K 10% 1W CC TC=0+882 | 01121 | GB1541 |
| A7R26 | 0683-1025 | 9 | | RESISTOR 1K 5% .25W FC TC=-400/+600 | 01121 | CB1025 |
| A7R27 | 0683-1005 | 5 | 11 | RESISTOR 10 5% .25W FC TC=-400/+500 | 01121 | CB1005 |
| A7R28 | 0683-2215 | 1 | | RESISTOR 220 5% .25W FC TC=-400/+600 | 01121 | CB2215 |
| A7R29 | 0683-2215 | 1 | | RESISTOR 220 5% .25W FC TC=-400/+600 | 01121 | CB2215 |
| A7R30 | 0757-0401 | 0 | | RESISTOR 100 1% .125W F TC=0+-100 | 24546 | C4-1/8-T0-101-F |

See introduction to this section for ordering information
*Indicates factory selected value

## Table 6-3. Replaceable Parts

| Reference Designation | HP Part Number | C D | Qty | Description | Mfr Code | Mfr Part Number |
|---|---|---|---|---|---|---|
| A7R31 | 0757-0401 | 0 | | RESISTOR 100 1% .125W F TC=0+-100 | 24546 | C4-1/8-T0-101-F |
| A7R32 | 0764-0015 | 7 | 1 | RESISTOR 560 5% 2W MO TC=0+-200 | 28480 | 0764-0015 |
| A7R33 | 0683-0275 | 9 | 4 | RESISTOR 2.7 5% .25W FC TC=-400/+500 | 01121 | CB27G5 |
| A7R34 | 0683-0275 | 9 | | RESISTOR 2.7 5% .25W FC TC=-400/+500 | 01121 | CB27G5 |
| A7R35 | 0683-0275 | 9 | | RESISTOR 2.7 5% .25W FC TC=-400/+500 | 01121 | CB27G5 |
| A7R36 | 0683-2205 | 9 | | RESISTOR 22 5% .25W FC TC=-400/+500 | 01121 | CB2205 |
| A7R37 | 0683-1525 | 4 | | RESISTOR 1.5K 5% .25W FC TC=-400/+700 | 01121 | CB1525 |
| A7R38 | 0683-1525 | 4 | | RESISTOR 1.5K 5% .25W FC TC=-400/+700 | 01121 | CB1525 |
| A7R39 | 0683-2215 | 1 | | RESISTOR 220 5% .25W FC TC=-400/+600 | 01121 | CB2215 |
| A7R40 | 0683-1215 | 0 | | RESISTOR 120 5% .25W FC TC=-400/+600 | 01121 | CB4715 |
| A7R41 | 0690-1541 | 9 | | RESISTOR 150K 10% 1W CC TC=0+882 | 01121 | GB1541 |
| A7R42 | 0690-1541 | 9 | | RESISTOR 150K 10% 1W CC TC=0+882 | 01121 | GB1541 |
| A7R43 | 0683-1005 | 5 | | RESISTOR 10 5% .25W FC TC=-400/+500 | 01121 | CB1005 |
| A7R44 | 0683-0335 | 2 | 2 | RESISTOR 3.3 5% .25W FC TC=-400/+500 | 01121 | CB33G5 |
| A7R45 | 0683-1005 | 5 | | RESISTOR 10 5% .25W FC TC=-400/+500 | 01121 | CB1005 |
| A7R46 | 0683-0335 | 2 | | RESISTOR 3.3 5% .25W FC TC=-400/+500 | 01121 | CB33G5 |
| A7R47 | 0698-4435 | 2 | 1 | RESISTOR 2.49K 1% .125W F TC=0+-100 | 24546 | C4-1/8-T0-2491-F |
| A7R48 | 0698-0083 | 8 | | RESISTOR 1.96K 1% .125W F TC=0+-100 | 24546 | C4-1/8-T0-1961-F |
| A7R49 | 0683-4745 | 6 | 1 | RESISTOR 470K 5% .25W FC TC=-800/+900 | 01121 | CB4745 |
| A7R50 | 0683-1025 | 9 | | RESISTOR 1K 5% .25W FC TC=-400/+600 | 01121 | CB1025 |
| A7R51 | 0683-1025 | 9 | | RESISTOR 1K 5% .25W FC TC=-400/+600 | 01121 | CB1025 |
| A7R52 | 0683-1025 | 9 | | RESISTOR 1K 5% .25W FC TC=-400/+600 | 01121 | CB1025 |
| A7R53 | 0683-1025 | 9 | | RESISTOR 1K 5% .25W FC TC=-400/+600 | 01121 | CB1025 |
| A7R54 | 0683-1025 | 3 | | RESISTOR 1K 5% .25W FC TC=-400/+700 | | |
| A7R55 | 0683-1025 | 9 | | RESISTOR 1K 5% .25W FC TC=-400/+600 | 01121 | CB1025 |
| A7R56 | 0683-1025 | 9 | | RESISTOR 1K 5% .25W FC TC=-400/+600 | 01121 | CB1025 |
| A7R57 | 0683-1025 | 9 | | RESISTOR 1K 5% .25W FC TC=-400/+600 | 01121 | CB1025 |
| A7R58 | 0683-4725 | 2 | | RESISTOR 4.7K 5% .25W FC TC=-400/+700 | 01121 | CB4725 |
| A7R59 | 0683-0275 | 9 | | RESISTOR 2.7 5% .25W FC TC=-400/+500 | 01121 | CB27G5 |
| A7R60 | 0683-1025 | 9 | | RESISTOR 1K 5% .25W FC TC=-400/+600 | 01121 | CB1025 |
| A7R61 | 0683-1025 | 9 | | RESISTOR 1K 5% .25W FC TC=-400/+600 | 01121 | CB1025 |
| A7R62 | 2100-3211 | 7 | | RESISTOR-TRMR 1K 10% C TOP-ADJ 1-TRN | 28480 | 2100-3211 |
| A7R63 | 0757-0402 | 1 | 1 | RESISTOR 110 1% .125W F TC=0+-100 | 24546 | C4-1/8-T0-111-F |
| A7R64 | 0683-1025 | 9 | | RESISTOR 1K 5% .25W FC TC=-400/+600 | 01121 | CB1025 |
| A7R65 | 0757-0401 | 0 | | RESISTOR 100 1% .125W F TC=0+-100 | 24546 | C4-1/8-T0-101-F |
| A7R66 | 2100-0567 | 7 | | RESISTOR-TRMR 2K 10% C TOP-ADJ 1-TRN | | |
| A7R67 | 0757-0273 | 4 | 1 | RESISTOR 3.01K 1% .125W F TC=0+-100 | 24546 | C4-1/8-T0-3011-F |
| A7R68 | 0683-4725 | 2 | | RESISTOR 4.7K 5% .25W FC TC=-400/+700 | 01121 | CB4725 |
| A7R69 | 0683-4735 | 4 | | RESISTOR 47K 5% .25W FC TC=-400/+800 | 01121 | CB4735 |
| A7R70 | 0683-1035 | 1 | | RESISTOR 10K 5% .25W FC TC=-400/+700 | 01121 | CB1035 |
| A7R71 | 0683-1025 | 9 | | RESISTOR 1K 5% .25W FC TC=-400/+600 | 01121 | CB1025 |
| A7R72 | 0683-1025 | 9 | | RESISTOR 1K 5% .25W FC TC=-400/+600 | 01121 | CB1025 |
| A7R73 | 0698-0085 | 0 | 1 | RESISTOR 2.61K 1% .125W F TC=0+-100 | 24546 | C4-1/8-T0-2611-F |
| A7R74 | 0757-0439 | 4 | | RESISTOR 6.81K 1% .125W F TC=0+-100 | 24546 | C4-1/8-T0-6811-F |
| A7R75 | 0683-2225 | 3 | | RESISTOR 2.2K 5% .25W FC TC=-400/+700 | 01121 | CB2225 |
| A7R76 | 0683-4725 | 2 | | RESISTOR 4.7K 5% .25W FC TC=-400/+700 | 01121 | CB4725 |
| A7R77 | 0683-4725 | 2 | | RESISTOR 4.7K 5% .25W FC TC=-400/+700 | 01121 | CB4725 |
| A7R78 | 0683-1025 | 9 | | RESISTOR 1K 5% .25W FC TC=-400/+600 | 01121 | CB1025 |
| A7R79 | 0811-1674 | | | RESISTOR 4.7 2W | | |
| A7R80 | 0683-1025 | | | RESISTOR 1K | | |
| A7RT1 | 0839-0247 | | | THERMISTOR 10Ω | | |
| A7RV1 | 0837-0106 | 2 | 2 | VARISTOR | 28480 | 0837-0106 |
| A7RV2 | 0837-0106 | 2 | | VARISTOR | 28480 | 0837-0106 |
| A7T1 | 9100-0889 | 6 | 1 | | 28480 | 9100-0889 |
| A7T2 | 04192-61803 | 4 | 2 | TRANSFORMER-PULSE | 28480 | 04192-61803 |
| A7T3 | 04192-61804 | 5 | 2 | TRANSFORMER-PULSE | 28480 | 04192-61804 |
| A7T4 | 04192-61803 | 4 | | TRANSFORMER-PULSE | 28480 | 04192-61803 |
| A7T5 | 04192-61804 | 5 | | TRANSFORMER-PULSE | 28480 | 04192-61804 |
| A7U1 | 1826-0138 | 8 | | IC COMPARATOR GP QUAD 14-DIP-P PKG | 01295 | LM339N |
| A7U2 | 1826-0276 | 5 | 1 | IC 78L05A V RGLTR TO-92 | 04713 | MC78L05ACP |
| A7U3 | 1820-0493 | 6 | 1 | IC OP AMP GP 8-DIP-P PKG | 27014 | LM307N |
| A7U4 | 1990-0663 | 1 | 1 | OPTO-ISOLATOR LED-PXSTR IF=40MA-MAX | 28480 | 1990-0663 |
| A7U5 | 1826-0956 | 9 | 1 | IC 3524 MODULATOR 16-DIP-C | 01295 | SG3524N |
| A7U6 | 1820-0196 | 6 | 1 | IC 723 V RGLTR TO-100 | 04713 | MC1723CG |
| | 0340-0220 | 8 | | BEADS | 28480 | 0340-0220 |
| | 0380-0744 | 5 | 4 | SPACER-RND .093 LG | 28480 | 0380-0744 |
| | 0590-0025 | 0 | 7 | NUT-HEX-PLSTC LKG 6-32-THD .172-IN-THK | 28480 | 0590-0025 |
| | 1205-0310 | 2 | 3 | HEAT SINK SGL TO-3-CS | 28480 | 1205-0310 |
| | 1400-0482 | 3 | 2 | CABLE TIE .062-3-DIA .14-WD NYL | 28480 | 1400-0482 |
| A7Z20 | 2110-0269 | 0 | 6 | FUSEHOLDER-CLIP TYPE.25D-FUSE | 28480 | 2110-0269 |
| | 2190-0008 | 3 | 7 | WASHER-LK EXT T NO. 6 .141-IN-ID | 28480 | 2190-0008 |
| | 2360-0121 | 2 | 7 | SCREW-MACH 6-32 .5-IN-LG PAN-HD-POZI | 00000 | ORDER BY DESCRIPTION |
| | 2740-0003 | 5 | 4 | NUT-HEX-W/LKWR 10-32-THD .125-IN-THK | 00000 | ORDER BY DESCRIPTION |
| | 3050-0378 | 5 | 2 | WASHER-FL NM NO. 10 .2-IN-ID .438-IN-OD | 28480 | 3050-0378 |

See introduction to this section for ordering information
*Indicates factory selected value

## Table 6-3. Replaceable Parts

| Reference Designation | HP Part Number | C D | Qty | Description | Mfr Code | Mfr Part Number |
|---|---|---|---|---|---|---|
| | 8150-0451 | 2 | | WIRE 24AWG Y 300V PVC 7X32 80C | 28480 | 8150-0451 |
| | 04192-01207 | 6 | 1 | HEAT SINK | 28480 | 04192-01207 |
| | 04192-01208 | 7 | 1 | HEAT SINK | 28480 | 04192-01208 |
| A8 | 04192-66508 | 6 | 1 | FLOATING POWER SUPPLY/BIAS SUPPLY BOARD (NOT INCLUDING THE SHIELD CASES) | 28480 | 04192-66508 |
| A8C1 | 0180-1083 | 3 | | CAPACITOR-FXD 33UF 25VDC AL | 28480 | 0180-1083 |
| A8C2 | 0180-1083 | 3 | | CAPACITOR-FXD 33UF 25VDC AL | 28480 | 0180-1083 |
| A8C3 | 0180-1083 | 3 | | CAPACITOR-FXD 33UF 25VDC AL | 28480 | 0180-1083 |
| A8C4 | 0180-1083 | 3 | | CAPACITOR-FXD 33UF 25VDC AL | 28480 | 0180-1083 |
| A8C5 | 0180-1083 | 3 | | CAPACITOR-FXD 33UF 25VDC AL | 28480 | 0180-1083 |
| A8C6 | 0180-1083 | 3 | | CAPACITOR-FXD 33UF 25VDC AL | 28480 | 0180-1083 |
| A8C7 | 0180-1083 | 3 | | CAPACITOR-FXD 33UF 25VDC AL | 28480 | 0180-1083 |
| A8C8 | 0180-1083 | 3 | | CAPACITOR-FXD 33UF 25VDC AL | 28480 | 0180-1083 |
| A8C9 | 0180-1083 | 3 | | CAPACITOR-FXD 33UF 25VDC AL | 28480 | 0180-1083 |
| A8C10 | 0180-1083 | 3 | | CAPACITOR-FXD 33UF 25VDC AL | 28480 | 0180-1083 |
| A8C11 | 0180-1083 | 3 | | CAPACITOR-FXD 33UF 25VDC AL | 28480 | 0180-1083 |
| A8C12 | 0160-0127 | 2 | | CAPACITOR-FXD 1UF +-20% 25VDC CER | 28480 | 0160-0127 |
| A8C13 | 0180-1083 | 3 | | CAPACITOR-FXD 33UF 25VDC AL | 28480 | 0180-1083 |
| A8C14 | 0160-4299 | 7 | 4 | CAPACITOR-FXD 2200PF +-20% 250VDC CER | 56289 | C067F251F222MS22-CDH |
| A8C15 | 0180-1083 | 3 | | CAPACITOR-FXD 33UF 25VDC AL | 28480 | 0180-1083 |
| A8C16 | 0150-0121 | 5 | 6 | CAPACITOR-FXD .1UF +80-20% 50VDC CER | 28480 | 0150-0121 |
| A8C17 | 0180-1083 | 3 | | CAPACITOR-FXD 33UF 25VDC AL | 28480 | 0180-1083 |
| A8C18 | 0180-1083 | 3 | | CAPACITOR-FXD 33UF 25VDC AL | 28480 | 0180-1083 |
| A8C19 | 0180-1083 | 3 | | CAPACITOR-FXD 33UF 25VDC AL | 28480 | 0180-1083 |
| A8C20 | 0180-1083 | 3 | | CAPACITOR-FXD 33UF 25VDC AL | 28480 | 0180-1083 |
| A8C21 | 0180-1083 | 3 | | CAPACITOR-FXD 33UF 25VDC AL | 28480 | 0180-1083 |
| A8C22 | 0180-1083 | 3 | | CAPACITOR-FXD 33UF 25VDC AL | 28480 | 0180-1083 |
| A8C23 | 0160-3456 | 6 | | CAPACITOR-FXD 1000PF +-10% 1KVDC CER | 28480 | 0160-3456 |
| A8C24 | 0160-3455 | 5 | 10 | CAPACITOR-FXD 470PF +-10% 1KVDC CER | 28480 | 0160-3455 |
| A8C25 | 0160-3455 | 5 | | CAPACITOR-FXD 470PF +-10% 1KVDC CER | 28480 | 0160-3455 |
| A8C26 | 0160-2055 | 9 | | CAPACITOR-FXD .01UF +80-20% 100VDC CER | 28480 | 0160-2055 |
| A8C27 | 0180-1083 | 3 | | CAPACITOR-FXD 33UF 25VDC AL | 28480 | 0180-1083 |
| A8C28 | 0180-1083 | 3 | | CAPACITOR-FXD 33UF 25VDC AL | 28480 | 0180-1083 |
| A8C29 | 0180-1083 | 3 | | CAPACITOR-FXD 33UF 25VDC AL | 28480 | 0180-1083 |
| A8C30 | 0160-3454 | 4 | 5 | CAPACITOR-FXD 220PF +-10% 1KVDC CER | 28480 | 0160-3454 |
| A8C31 | 0160-0127 | 2 | | CAPACITOR-FXD 1UF +-20% 25VDC CER | 28480 | 0160-0127 |
| A8C32 | 0180-1083 | 3 | | CAPACITOR-FXD 33UF 25VDC AL | 28480 | 0180-1083 |
| A8C33 | 0160-4299 | 7 | | CAPACITOR-FXD 2200PF +-20% 250VDC CER | 56289 | C067F251F222MS22-CDH |
| A8C34 | 0180-1083 | 3 | | CAPACITOR-FXD 33UF 25VDC AL | 28480 | 0180-1083 |
| A8C35 | 0150-0121 | 5 | | CAPACITOR-FXD .1UF +80-20% 50VDC CER | 28480 | 0150-0121 |
| A8C36 | 0180-1083 | 3 | | CAPACITOR-FXD 33UF 25VDC AL | 28480 | 0180-1083 |
| A8C37 | 0180-1083 | 3 | | CAPACITOR-FXD 33UF 25VDC AL | 28480 | 0180-1083 |
| A8C38 | 0180-1083 | 3 | | CAPACITOR-FXD 33UF 25VDC AL | 28480 | 0180-1083 |
| A8C39 | 0180-1083 | 3 | | CAPACITOR-FXD 33UF 25VDC AL | 28480 | 0180-1083 |
| A8C40 | 0180-1083 | 3 | | CAPACITOR-FXD 33UF 25VDC AL | 28480 | 0180-1083 |
| A8C41 | 0180-1083 | 3 | | CAPACITOR-FXD 33UF 25VDC AL | 28480 | 0180-1083 |
| A8C42 | 0160-3456 | 6 | | CAPACITOR-FXD 1000PF +-10% 1KVDC CER | 28480 | 0160-3456 |
| A8C43 | 0160-3455 | 5 | | CAPACITOR-FXD 470PF +-10% 1KVDC CER | 28480 | 0160-3455 |
| A8C44 | 0160-3455 | 5 | | CAPACITOR-FXD 470PF +-10% 1KVDC CER | 28480 | 0160-3455 |
| A8C45 | 0160-2055 | 9 | | CAPACITOR-FXD .01UF +80-20% 100VDC CER | 28480 | 0160-2055 |
| A8C46 | 0180-1083 | 3 | | CAPACITOR-FXD 33UF 25VDC AL | 28480 | 0180-1083 |
| A8C47 | 0180-1083 | 3 | | CAPACITOR-FXD 33UF 25VDC AL | 28480 | 0180-1083 |
| A8C48 | 0180-1083 | 3 | | CAPACITOR-FXD 33UF 25VDC AL | 28480 | 0180-1083 |
| A8C49 | 0160-3454 | 4 | | CAPACITOR-FXD 220PF +-10% 1KVDC CER | 28480 | 0160-3454 |
| A8C50 | 0160-0127 | 2 | | CAPACITOR-FXD 1UF +-20% 25VDC CER | 28480 | 0160-0127 |
| A8C51 | 0180-1083 | 3 | | CAPACITOR-FXD 33UF 25VDC AL | 28480 | 0180-1083 |
| A8C52 | 0160-4299 | 7 | | CAPACITOR-FXD 2200PF +-20% 250VDC CER | 56289 | C067F251F222MS22-CDH |
| A8C53 | 0180-1083 | 3 | | CAPACITOR-FXD 33UF 25VDC AL | 28480 | 0180-1083 |
| A8C54 | 0150-0121 | 5 | | CAPACITOR-FXD .1UF +80-20% 50VDC CER | 28480 | 0150-0121 |
| A8C55 | 0180-1083 | 3 | | CAPACITOR-FXD 33UF 25VDC AL | 28480 | 0180-1083 |
| A8C56 | 0180-1083 | 3 | | CAPACITOR-FXD 33UF 25VDC AL | 28480 | 0180-1083 |
| A8C57 | 0180-1083 | 3 | | CAPACITOR-FXD 33UF 25VDC AL | 28480 | 0180-1083 |
| A8C58 | 0180-1083 | 3 | | CAPACITOR-FXD 33UF 25VDC AL | 28480 | 0180-1083 |
| A8C59 | 0180-1083 | 3 | | CAPACITOR-FXD 33UF 25VDC AL | 28480 | 0180-1083 |
| A8C60 | 0180-1083 | 3 | | CAPACITOR-FXD 33UF 25VDC AL | 28480 | 0180-1083 |
| A8C61 | 0160-3456 | 6 | | CAPACITOR-FXD 1000PF +-10% 1KVDC CER | 28480 | 0160-3456 |
| A8C62 | 0160-3454 | 4 | | CAPACITOR-FXD 220PF +-10% 1KVDC CER | 28480 | 0160-3454 |
| A8C63 | 0160-3455 | 5 | | CAPACITOR-FXD 470PF +-10% 1KVDC CER | 28480 | 0160-3455 |
| A8C64 | 0160-3455 | 5 | | CAPACITOR-FXD 470PF +-10% 1KVDC CER | 28480 | 0160-3455 |
| A8C65 | 0160-2055 | 9 | | CAPACITOR-FXD .01UF +80-20% 100VDC CER | 28480 | 0160-2055 |
| A8C66 | 0180-1083 | 3 | | CAPACITOR-FXD 33UF 25VDC AL | 28480 | 0180-1083 |
| A8C67 | 0180-1083 | 3 | | CAPACITOR-FXD 33UF 25VDC AL | 28480 | 0180-1083 |
| A8C68 | 0180-1081 | 1 | 12 | CAPACITOR-FXD 47UF 50VDC AL | 28480 | 0180-1081 |
| A8C69 | 0160-3466 | 8 | | CAPACITOR-FXD 100PF +-10% 1KVDC CER | 28480 | 0160-3466 |
| A8C70 | 0180-1083 | 3 | | CAPACITOR-FXD 33UF 25VDC AL | 28480 | 0180-1083 |

See introduction to this section for ordering information
*Indicates factory selected value

## Table 6-3. Replaceable Parts

| Reference Designation | HP Part Number | C D | Qty | Description | Mfr Code | Mfr Part Number |
|---|---|---|---|---|---|---|
| A8C71 | 0140-0196 | 1 | 1 | CAPACITOR-FXD 150PF +-5% 300VDC MICA | | |
| A8C72 | 0180-1081 | 1 | | CAPACITOR-FXD 47UF 50VDC AL | 28480 | 0180-1081 |
| A8C73 | 0180-1081 | 1 | | CAPACITOR-FXD 47UF 50VDC AL | 28480 | 0180-1081 |
| A8C74 | 0180-1081 | 1 | | CAPACITOR-FXD 47UF 50VDC AL | 28480 | 0180-1081 |
| A8C75 | 0180-1081 | 1 | | CAPACITOR-FXD 47UF 50VDC AL | 28480 | 0180-1081 |
| A8C76 | 0180-1081 | 1 | | CAPACITOR-FXD 47UF 50VDC AL | 28480 | 0180-1081 |
| A8C77 | 0180-1081 | 1 | | CAPACITOR-FXD 47UF 50VDC AL | 28480 | 0180-1081 |
| A8C78 | 0180-1081 | 1 | | CAPACITOR-FXD 47UF 50VDC AL | 28480 | 0180-1081 |
| A8C79 | 0160-3455 | 5 | | CAPACITOR-FXD 470PF +-10% 1KVDC CER | 28480 | 0160-3455 |
| A8C80 | 0180-1081 | 1 | | CAPACITOR-FXD 47UF 50VDC AL | 28480 | 0180-1081 |
| A8C81 | 0160-2055 | 9 | | CAPACITOR-FXD .01UF +80-20% 100VDC CER | 28480 | 0160-2055 |
| A8C82 | 0160-4299 | 7 | | CAPACITOR-FXD 2200PF +-20% 250VDC CER | 56289 | C067F251F222MS22-CDH |
| A8C83 | 0180-1083 | 3 | | CAPACITOR-FXD 33UF 25VDC AL | 28480 | 0180-1083 |
| A8C84 | 0160-0127 | 2 | | CAPACITOR-FXD 1UF +-20% 25VDC CER | 28480 | 0160-0127 |
| A8C85 | 0150-0121 | 5 | | CAPACITOR-FXD .1UF +80-20% 50VDC CER | 28480 | 0150-0121 |
| A8C86 | 0150-0121 | 5 | | CAPACITOR-FXD .1UF +80-20% 50VDC CER | 28480 | 0150-0121 |
| A8C87 | 0160-0127 | 2 | | CAPACITOR-FXD 1UF +-20% 25VDC CER | 28480 | 0160-0127 |
| A8C88 | 0160-2055 | 9 | | CAPACITOR-FXD .01UF +80-20% 100VDC CER | 28480 | 0160-2055 |
| A8C89 | 0180-1081 | 1 | | CAPACITOR-FXD 47UF 50VDC AL | 28480 | 0180-1081 |
| A8C90 | 0160-3466 | 8 | | CAPACITOR-FXD 100PF +-10% 1KVDC CER | 28480 | 0160-3466 |
| A8C91 | 0150-0121 | 5 | | CAPACITOR-FXD .1UF +80-20% 50VDC CER | 28480 | 0150-0121 |
| A8C92 | 0180-1083 | 3 | | CAPACITOR-FXD 33UF 25VDC AL | 28480 | 0180-1083 |
| A8C93 | 0180-1083 | 3 | | CAPACITOR-FXD 33UF 25VDC AL | 28480 | 0180-1083 |
| A8C94 | 0180-1083 | 3 | | CAPACITOR-FXD 33UF 25VDC AL | 28480 | 0180-1083 |
| A8C95 | 0180-1083 | 3 | | CAPACITOR-FXD 33UF 25VDC AL | 28480 | 0180-1083 |
| A8C96 | 0180-1083 | 3 | | CAPACITOR-FXD 33UF 25VDC AL | 28480 | 0180-1083 |
| A8C97 | 0180-1083 | 3 | | CAPACITOR-FXD 33UF 25VDC AL | 28480 | 0180-1083 |
| A8C98 | 0180-1083 | 3 | | CAPACITOR-FXD 33UF 25VDC AL | 28480 | 0180-1083 |
| A8C99 | 0180-1083 | 3 | | CAPACITOR-FXD 33UF 25VDC AL | 28480 | 0180-1083 |
| A8C100 | 0180-1083 | 3 | | CAPACITOR-FXD 33UF 25VDC AL | 28480 | 0180-1083 |
| A8C101 | 0180-1083 | 3 | | CAPACITOR-FXD 33UF 25VDC AL | 28480 | 0180-1083 |
| A8C102 | 0160-3455 | 5 | | CAPACITOR-FXD 470PF +-10% 1KVDC CER | 28480 | 0160-3455 |
| A8C103 | 0180-1083 | 3 | | CAPACITOR-FXD 33UF 25VDC AL | 28480 | 0180-1083 |
| A8C104 | 0180-1083 | 3 | | CAPACITOR-FXD 33UF 25VDC AL | 28480 | 0180-1083 |
| A8C105 | 0160-3455 | 5 | | CAPACITOR-FXD 470PF +-10% 1KVDC CER | 28480 | 0160-3455 |
| A8C106 | 0160-3455 | 5 | | CAPACITOR-FXD 470PF +-10% 1KVDC CER | 28480 | 0160-3455 |
| A8C107 | 0180-1083 | 3 | | CAPACITOR-FXD 33UF 25VDC AL | 28480 | 0180-1083 |
| A8C108 | 0180-1083 | 3 | | CAPACITOR-FXD 33UF 25VDC AL | 28480 | 0180-1083 |
| A8C109 | 0160-2055 | 9 | | CAPACITOR-FXD .01UF +80-20% 100VDC CER | 28480 | 0160-2055 |
| A8C110 | 0180-1083 | 3 | | CAPACITOR-FXD 33UF 25VDC AL | 28480 | 0180-1083 |
| A8C111 | 0180-1083 | 3 | | CAPACITOR-FXD 33UF 25VDC AL | 28480 | 0180-1083 |
| A8C112 | 0160-4344 | 3 | 1 | CAPACITOR-FXD 6UF +-20% 75VDC MET-POLYC | 28480 | 0160-4344 |
| A8C113 | 0180-1083 | 3 | | CAPACITOR-FXD 33UF 25VDC AL | 28480 | 0180-1083 |
| A8C114 | 0160-2307 | 4 | | CAPACITOR-FXD 47PF +-5% 300VDC MICA | 28480 | 0160-2307 |
| A8C115 | 0180-1081 | 1 | | CAPACITOR-FXD 47UF 50VDC AL | 28480 | 0180-1081 |
| A8C116 | 0180-1081 | 1 | | CAPACITOR-FXD 47UF 50VDC AL | 28480 | 0180-1081 |
| A8C117 | 0170-0040 | 9 | 1 | CAPACITOR-FXD .047UF +-10% 200VDC POLYE | 56289 | 292P47392 |
| A8C120 | 0160-2204 | 0 | | CAPACITOR-FXD 100PF +-5% 300VDC MICA | 28480 | 0160-2204 |
| A8C121 | 0180-1083 | 3 | | CAPACITOR-FXD 33UF 25VDC AL | 28480 | 0180-1083 |
| A8C122 | 0180-1083 | 3 | | CAPACITOR-FXD 33UF 25VDC AL | 28480 | 0180-1083 |
| A8C123 | 0180-1052 | | | CAPACITOR-FXD 220UF 6.3V | | |
| A8CR1 | 1901-0050 | 3 | | DIODE-SWITCHING 80V 200MA 2NS DO-35 | 28480 | 1901-0050 |
| A8CR2 | 1901-0050 | 3 | | DIODE-SWITCHING 80V 200MA 2NS DO-35 | 28480 | 1901-0050 |
| A8CR3 | 1901-0050 | 3 | | DIODE-SWITCHING 80V 200MA 2NS DO-35 | 28480 | 1901-0050 |
| A8CR4 | 1901-0050 | 3 | | DIODE-SWITCHING 80V 200MA 2NS DO-35 | 28480 | 1901-0050 |
| A8CR5 | 1901-0050 | 3 | | DIODE-SWITCHING 80V 200MA 2NS DO-35 | 28480 | 1901-0050 |
| A8CR5 | 1901-0050 | 3 | | DIODE-SWITCHING 80V 200MA 2NS DO-35 | 28480 | 1901-0050 |
| A8CR6 | 1901-0050 | 3 | | DIODE-SWITCHING 80V 200MA 2NS DO-35 | 28480 | 1901-0050 |
| A8CR7 | 1901-0050 | 3 | | DIODE-SWITCHING 80V 200MA 2NS DO-35 | 28480 | 1901-0050 |
| A8CR7 | 1901-0050 | 3 | | DIODE-SWITCHING 80V 200MA 2NS DO-35 | 28480 | 1901-0050 |
| A8CR8 | 1901-0050 | 3 | | DIODE-SWITCHING 80V 200MA 2NS DO-35 | 28480 | 1901-0050 |
| A8CR9 | 1901-0050 | 3 | | DIODE-SWITCHING 80V 200MA 2NS DO-35 | 28480 | 1901-0050 |
| A8CR10 | 1901-0050 | 3 | | DIODE-SWITCHING 80V 200MA 2NS DO-35 | 28480 | 1901-0050 |
| A8CR11 | 1901-0050 | 3 | | DIODE-SWITCHING 80V 200MA 2NS DO-35 | 28480 | 1901-0050 |
| A8CR12 | 1901-0050 | 3 | | DIODE-SWITCHING 80V 200MA 2NS DO-35 | 28480 | 1901-0050 |
| A8CR13 | 1902-3234 | 3 | 4 | DIODE-ZNR 19.6V 5% DO-35 PD=.4W | 28480 | 1902-3234 |
| A8CR14 | 1902-3234 | 3 | | DIODE-ZNR 19.6V 5% DO-35 PD=.4W | 28480 | 1902-3234 |
| A8CR15 | 1902-3234 | 3 | | DIODE-ZNR 19.6V 5% DO-35 PD=.4W | 28480 | 1902-3234 |
| A8CR16 | 1902-3234 | 3 | | DIODE-ZNR 19.6V 5% DO-35 PD=.4W | 28480 | 1902-3234 |
| A8CR17 | 1901-0028 | 5 | | DIODE-PWR RECT 400V 750MA DO-29 | 28480 | 1901-0028 |
| A8CR18 | 1901-0028 | 5 | | DIODE-PWR RECT 400V 750MA DO-29 | 28480 | 1901-0028 |
| A8CR19 | 1901-0050 | 3 | | DIODE-SWITCHING 80V 200MA 2NS DO-35 | 28480 | 1901-0050 |
| A8CR20 | 1901-0050 | 3 | | DIODE-SWITCHING 80V 200MA 2NS DO-35 | 28480 | 1901-0050 |
| A8CR21 | 1901-0050 | 3 | | DIODE-SWITCHING 80V 200MA 2NS DO-35 | 28480 | 1901-0050 |
| A8CR22 | 1901-0050 | 3 | | DIODE-SWITCHING 80V 200MA 2NS DO-35 | 28480 | 1901-0050 |
| A8CR23 | 1901-0050 | 3 | | DIODE-SWITCHING 80V 200MA 2NS DO-35 | 28480 | 1901-0050 |
| A8CR24 | 1901-0050 | 3 | | DIODE-SWITCHING 80V 200MA 2NS DO-35 | 28480 | 1901-0050 |

See introduction to this section for ordering information
*Indicates factory selected value

## Table 6-3. Replaceable Parts

| Reference Designation | HP Part Number | C D | Qty | Description | Mfr Code | Mfr Part Number |
|---|---|---|---|---|---|---|
| A8CR25 | 1901-0050 | 3 | | DIODE-SWITCHING 80V 200MA 2NS DO-35 | 28480 | 1901-0050 |
| A8CR26 | 1901-0050 | 3 | | DIODE-SWITCHING 80V 200MA 2NS DO-35 | 28480 | 1901-0050 |
| A8CR27 | 1901-0050 | 3 | | DIODE-SWITCHING 80V 200MA 2NS DO-35 | 28480 | 1901-0050 |
| A8CR28 | 1901-0050 | 3 | | DIODE-SWITCHING 80V 200MA 2NS DO-35 | 28480 | 1901-0050 |
| A8CR29 | 1901-0050 | 3 | | DIODE-SWITCHING 80V 200MA 2NS DO-35 | 28480 | 1901-0050 |
| A8CR30 | 1901-0050 | 3 | | DIODE-SWITCHING 80V 200MA 2NS DO-35 | 28480 | 1901-0050 |
| A8CR31 | 1901-0050 | 3 | | DIODE-SWITCHING 80V 200MA 2NS DO-35 | 28480 | 1901-0050 |
| A8CR32 | 1901-0050 | 3 | | DIODE-SWITCHING 80V 200MA 2NS DO-35 | 28480 | 1901-0050 |
| A8CR33 | 1902-0041 | | | DIODE-SWITCHING 50V 500MA 30NS DO-7 | | |
| A8CR34 | 1902-0041 | | | DIODE-SWITCHING 50V 500MA 30NS DO-7 | | |
| A8CR37 | 1902-3036 | | | DIODE-ZNR 3.16V 5% | | |
| A8CR38 | 1901-0050 | | | DIODE-SWITCHING | | |
| A8CR39 | 1901-0050 | | | DIODE-SWITCHING | | |
| A8J1 | 1200-0607 | 0 | | SOCKET-IC 16-CONT DIP DIP-SLDR | 28480 | 1200-0607 |
| A8J2 | 1251-0513 | 4 | | CONNECTOR 5-PIN M POST TYPE | 28480 | 1251-0513 |
| A8J3 | 1251-3197 | 6 | | CONNECTOR 12-PIN M POST TYPE | 28480 | 1251-3197 |
| A8J4 | 1250-0257 | 1 | | CONNECTOR-RF SMB M PC 50-OHM | 28480 | 1250-0257 |
| A8J5 | 1251-1636 | 4 | 2 | CONNECTOR-SGL CONT SKT .04-IN-BSC-SZ RND | 28480 | 1251-1636 |
| A8J6 | 1251-1636 | 4 | | CONNECTOR-SGL CONT SKT .04-IN-BSC-SZ RND | 28480 | 1251-1636 |
| A8J7 | 1200-0541 | 1 | | SOCKET-IC 24-CONT DIP DIP-SLDR | 28480 | 1200-0541 |
| A8K1 | 0490-1269 | 4 | | RELAY 1C 12VDC-COIL .66A 30VDC | 28480 | 0490-1269 |
| A8L1 | 9140-0114 | 4 | | INDUCTOR RF-CH-MLD 10UH 10% .166DX.385LG | 28480 | 9140-0114 |
| A8L2 | 9140-0098 | 4 | | INDUCTOR RF-CH-MLD 2.2UH 10% .166DX.385LG | | |
| A8L3 | 9140-0098 | 4 | | INDUCTOR RF-CH-MLD 2.2UH 10% .166DX.385LG | | |
| A8L4 | 9140-0114 | 4 | | INDUCTOR RF-CH-MLD 10UH 10% .166DX.385LG | 28480 | 9140-0114 |
| A8L5 | 9140-0114 | 4 | | INDUCTOR RF-CH-MLD 10UH 10% .166DX.385LG | 28480 | 9140-0114 |
| A8L6 | 9100-1629 | 4 | 10 | INDUCTOR RF-CH-MLD 47UH 5% .166DX.385LG | 28480 | 9100-1629 |
| A8L7 | 9100-1629 | 4 | | INDUCTOR RF-CH-MLD 47UH 5% .166DX.385LG | 28480 | 9100-1629 |
| A8L8 | 9140-0210 | 1 | | INDUCTOR RF-CH-MLD 100UH 5% .166DX.385LG | 28480 | 9140-0210 |
| A8L9 | 9140-0114 | 4 | | INDUCTOR RF-CH-MLD 10UH 10% .166DX.385LG | 28480 | 9140-0114 |
| A8L10 | 9140-0114 | 4 | | INDUCTOR RF-CH-MLD 10UH 10% .166DX.385LG | 28480 | 9140-0114 |
| A8L11 | 9140-0114 | 4 | | INDUCTOR RF-CH-MLD 10UH 10% .166DX.385LG | 28480 | 9140-0114 |
| A8L12 | 9100-1629 | 4 | | INDUCTOR RF-CH-MLD 47UH 5% .166DX.385LG | 28480 | 9100-1629 |
| A8L13 | 9100-1629 | 4 | | INDUCTOR RF-CH-MLD 47UH 5% .166DX.385LG | 28480 | 9100-1629 |
| A8L14 | 9140-0210 | 1 | | INDUCTOR RF-CH-MLD 100UH 5% .166DX.385LG | 28480 | 9140-0210 |
| A8L15 | 9140-0114 | 4 | | INDUCTOR RF-CH-MLD 10UH 10% .166DX.385LG | 28480 | 9140-0114 |
| A8L16 | 9140-0114 | 4 | | INDUCTOR RF-CH-MLD 10UH 10% .166DX.385LG | 28480 | 9140-0114 |
| A8L17 | 9140-0114 | 4 | | INDUCTOR RF-CH-MLD 10UH 10% .166DX.385LG | 28480 | 9140-0114 |
| A8L18 | 9100-1629 | 4 | | INDUCTOR RF-CH-MLD 47UH 5% .166DX.385LG | 28480 | 9100-1629 |
| A8L19 | 9100-1629 | 4 | | INDUCTOR RF-CH-MLD 47UH 5% .166DX.385LG | 28480 | 9100-1629 |
| A8L20 | 9140-0210 | 1 | | INDUCTOR RF-CH-MLD 100UH 5% .166DX.385LG | 28480 | 9140-0210 |
| A8L21 | 9140-0114 | 4 | | INDUCTOR RF-CH-MLD 10UH 10% .166DX.385LG | 28480 | 9140-0114 |
| A8L22 | 9140-0114 | 4 | | INDUCTOR RF-CH-MLD 10UH 10% .166DX.385LG | 28480 | 9140-0114 |
| A8L23 | 9100-1629 | 4 | | INDUCTOR RF-CH-MLD 47UH 5% .166DX.385LG | 28480 | 9100-1629 |
| A8L24 | 9100-1629 | 4 | | INDUCTOR RF-CH-MLD 47UH 5% .166DX.385LG | 28480 | 9100-1629 |
| A8L25 | 9140-0210 | 1 | | INDUCTOR RF-CH-MLD 100UH 5% .166DX.385LG | 28480 | 9140-0210 |
| A8L26 | 9140-0114 | 4 | | INDUCTOR RF-CH-MLD 10UH 10% .166DX.385LG | 28480 | 9140-0114 |
| A8L27 | 9140-0114 | 4 | | INDUCTOR RF-CH-MLD 10UH 10% .166DX.385LG | 28480 | 9140-0114 |
| A8L28 | 9100-1629 | 4 | | INDUCTOR RF-CH-MLD 47UH 5% .166DX.385LG | 28480 | 9100-1629 |
| A8L29 | 9100-1629 | 4 | | INDUCTOR RF-CH-MLD 47UH 5% .166DX.385LG | 28480 | 9100-1629 |
| A8L30 | 9140-0210 | 1 | | INDUCTOR RF-CH-MLD 100UH 5% .166DX.385LG | 28480 | 9140-0210 |
| A8L31 | 9140-0114 | 4 | | INDUCTOR RF-CH-MLD 10UH 10% .166DX.385LG | 28480 | 9140-0114 |
| A8L32 | 9100-0880 | 7 | 1 | COIL-22 UH 5% | 28480 | 9100-0880 |
| A8Q1 | 1854-0547 | 2 | 8 | TRANSISTOR NPN 2N3725 SI TO-5 PD=800MW | 01295 | 2N3725 |
| A8Q2 | 1854-0547 | 2 | | TRANSISTOR NPN 2N3725 SI TO-5 PD=800MW | 01295 | 2N3725 |
| A8Q3 | 1854-0019 | 3 | | TRANSISTOR NPN SI TO-18 PD=360MW | 28480 | 1854-0019 |
| A8Q4 | 1853-0010 | 2 | 5 | TRANSISTOR PNP SI TO-18 PD=360MW | 28480 | 1853-0010 |
| A8Q5 | 1854-0547 | 2 | | TRANSISTOR NPN 2N3725 SI TO-5 PD=800MW | 01295 | 2N3725 |
| A8Q6 | 1854-0547 | 2 | | TRANSISTOR NPN 2N3725 SI TO-5 PD=800MW | 01295 | 2N3725 |
| A8Q7 | 1854-0019 | 3 | | TRANSISTOR NPN SI TO-18 PD=360MW | 28480 | 1854-0019 |
| A8Q8 | 1853-0010 | 2 | | TRANSISTOR PNP SI TO-18 PD=360MW | 28480 | 1853-0010 |
| A8Q9 | 1854-0547 | 2 | | TRANSISTOR NPN 2N3725 SI TO-5 PD=800MW | 01295 | 2N3725 |
| A8Q10 | 1854-0547 | 2 | | TRANSISTOR NPN 2N3725 SI TO-5 PD=800MW | 01295 | 2N3725 |
| A8Q11 | 1854-0019 | 3 | | TRANSISTOR NPN SI TO-18 PD=360MW | 28480 | 1854-0019 |
| A8Q12 | 1853-0010 | 2 | | TRANSISTOR PNP SI TO-18 PD=360MW | 28480 | 1853-0010 |
| A8Q13 | 1853-0010 | 2 | | TRANSISTOR PNP SI TO-18 PD=360MW | 28480 | 1853-0010 |
| A8Q14 | 1854-0547 | 2 | | TRANSISTOR NPN 2N3725 SI TO-5 PD=800MW | 01295 | 2N3725 |
| A8Q15 | 1854-0547 | 2 | | TRANSISTOR NPN 2N3725 SI TO-5 PD=800MW | 01295 | 2N3725 |
| A8Q16 | 1854-0019 | 3 | | TRANSISTOR NPN SI TO-18 PD=360MW | 28480 | 1854-0019 |
| A8Q17 | 1853-0010 | 2 | | TRANSISTOR PNP SI TO-18 PD=360MW | 28480 | 1853-0010 |
| A8Q18 | 1853-0281 | 9 | 1 | TRANSISTOR PNP 2N2907A SI TO-18 PD=400MW | 04713 | 2N2907A |
| A8Q19 | 1853-0232 | 0 | 2 | TRANSISTOR PNP SI TO-39 PD=1W FT=200MHZ | 28480 | 1853-0232 |
| A8Q20 | 1853-0232 | 0 | | TRANSISTOR PNP SI TO-39 PD=1W FT=200MHZ | 28480 | 1853-0232 |
| A8Q21 | 1854-0474 | 4 | 2 | TRANSISTOR NPN SI PD=310MW FT=100MHZ | 04713 | 2N5551 |
| A8Q22 | 1854-0271 | 9 | 2 | TRANSISTOR NPN SI TO-39 PD=1W FT=150MHZ | 28480 | 1854-0271 |
| A8Q23 | 1854-0271 | 9 | | TRANSISTOR NPN SI TO-39 PD=1W FT=150MHZ | 28480 | 1854-0271 |
| A8Q24 | 1853-0080 | 6 | 2 | TRANSISTOR PNP SI PD=300MW FT=30MHZ | 28480 | 1853-0080 |
| A8Q25 | 1854-0474 | 4 | | TRANSISTOR NPN SI PD=310MW FT=100MHZ | 04713 | 2N5551 |

See introduction to this section for ordering information
*Indicates factory selected value

## Table 6-3. Replaceable Parts

| Reference Designation | HP Part Number | C D | Qty | Description | Mfr Code | Mfr Part Number |
|---|---|---|---|---|---|---|
| A8Q26 | 1853-0080 | 6 | | TRANSISTOR PNP SI PD=300MW FT=30MHZ | 28480 | 1853-0080 |
| A8Q27 | 1855-0091 | 3 | 6 | TRANSISTOR J-FET N-CHAN D-MODE SI | 28480 | 1855-0091 |
| A8Q28 | 1855-0091 | 3 | | TRANSISTOR J-FET N-CHAN D-MODE SI | 28480 | 1855-0091 |
| A8Q29 | 1854-0215 | | | TRANSISTOR NPN SI PD=350MW FT=300MHZ | | |
| A8Q30 | 1853-0036 | | | TRANSISTOR PNP SI PD=310MW FT=250MHZ | | |
| A8Q33, Q34 | 1854-0477 | | | TRANSISTOR NPN SI 2N2222A | | |
| A8R1 | 0683-2215 | 1 | | RESISTOR 220 5% .25W FC TC=-400/+600 | 01121 | CB2215 |
| A8R2 | 0683-3325 | 6 | | RESISTOR 3.3K 5% .25W FC TC=-400/+700 | 01121 | CB3325 |
| A8R3 | 0683-4725 | 2 | | RESISTOR 4.7K 5% .25W FC TC=-400/+700 | 01121 | CB4725 |
| A8R4 | 0683-4725 | 2 | | RESISTOR 4.7K 5% .25W FC TC=-400/+700 | 01121 | CB4725 |
| A8R5 | 0683-1005 | 5 | | RESISTOR 10 5% .25W FC TC=-400/+500 | 01121 | CB1005 |
| A8R6 | 0683-1005 | 5 | | RESISTOR 10 5% .25W FC TC=-400/+500 | 01121 | CB1005 |
| A8R7 | 0683-3325 | 6 | | RESISTOR 3.3K 5% .25W FC TC=-400/+700 | 01121 | CB3325 |
| A8R8 | 0683-2215 | 1 | | RESISTOR 220 5% .25W FC TC=-400/+600 | 01121 | CB2215 |
| A8R9 | 0683-3325 | 6 | | RESISTOR 3.3K 5% .25W FC TC=-400/+700 | 01121 | CB3325 |
| A8R10 | 0683-4725 | 2 | | RESISTOR 4.7K 5% .25W FC TC=-400/+700 | 01121 | CB4725 |
| A8R11 | 0683-4725 | 2 | | RESISTOR 4.7K 5% .25W FC TC=-400/+700 | 01121 | CB4725 |
| A8R12 | 0683-1005 | 5 | | RESISTOR 10 5% .25W FC TC=-400/+500 | 01121 | CB1005 |
| A8R13 | 0683-1005 | 5 | | RESISTOR 10 5% .25W FC TC=-400/+500 | 01121 | CB1005 |
| A8R14 | 0683-3325 | 6 | | RESISTOR 3.3K 5% .25W FC TC=-400/+700 | 01121 | CB3325 |
| A8R15 | 0683-2215 | 1 | | RESISTOR 220 5% .25W FC TC=-400/+600 | 01121 | CB2215 |
| A8R16 | 0683-3325 | 6 | | RESISTOR 3.3K 5% .25W FC TC=-400/+700 | 01121 | CB3325 |
| A8R17 | 0683-4725 | 2 | | RESISTOR 4.7K 5% .25W FC TC=-400/+700 | 01121 | CB4725 |
| A8R18 | 0683-4725 | 2 | | RESISTOR 4.7K 5% .25W FC TC=-400/+700 | 01121 | CB4725 |
| A8R19 | 0683-1005 | 5 | | RESISTOR 10 5% .25W FC TC=-400/+500 | 01121 | CB1005 |
| A8R20 | 0683-1035 | 1 | | RESISTOR 10K 5% .25W FC TC=-400/+700 | 01121 | CB1035 |
| A8R21 | 0683-1035 | 1 | | RESISTOR 10K 5% .25W FC TC=-400/+700 | 01121 | CB1035 |
| A8R22 | 0683-1005 | 5 | | RESISTOR 10 5% .25W FC TC=-400/+500 | 01121 | CB1005 |
| A8R23 | 0683-3325 | 6 | | RESISTOR 3.3K 5% .25W FC TC=-400/+700 | 01121 | CB3325 |
| A8R24 | 0683-1015 | 7 | | RESISTOR 100 5% .25W FC TC=-400/+500 | 01121 | CB1015 |
| A8R25 | 0683-4715 | 0 | | RESISTOR 470 5% .25W FC TC=-400/+600 | 01121 | CB4715 |
| A8R26 | 0683-2215 | 1 | | RESISTOR 220 5% .25W FC TC=-400/+600 | 01121 | CB2215 |
| A8R27 | 0683-3325 | 6 | | RESISTOR 3.3K 5% .25W FC TC=-400/+700 | 01121 | CB3325 |
| A8R28 | 0683-2215 | 1 | | RESISTOR 220 5% .25W FC TC=-400/+600 | 01121 | CB2215 |
| A8R29 | 0683-1005 | 5 | | RESISTOR 10 5% .25W FC TC=-400/+500 | 01121 | CB1005 |
| A8R30 | 0683-1005 | 5 | | RESISTOR 10 5% .25W FC TC=-400/+500 | 01121 | CB1005 |
| A8R31 | 0683-3325 | 6 | | RESISTOR 3.3K 5% .25W FC TC=-400/+700 | 01121 | CB3325 |
| A8R32 | 0683-4725 | 2 | | RESISTOR 4.7K 5% .25W FC TC=-400/+700 | 01121 | CB4725 |
| A8R33 | 0683-3325 | 6 | | RESISTOR 3.3K 5% .25W FC TC=-400/+700 | 01121 | CB3325 |
| A8R34 | 0683-1825 | 7 | | RESISTOR 1.8K 5% .25W FC TC=-400/+700 | 01121 | CB1825 |
| A8R35 | 0683-2215 | 1 | | RESISTOR 220 5% .25W FC TC=-400/+600 | 01121 | CB2215 |
| A8R36 | 0683-1035 | 1 | | RESISTOR 10K 5% .25W FC TC=-400/+700 | 01121 | CB1035 |
| A8R37 | 0683-1015 | 7 | | RESISTOR 100 5% .25W FC TC=-400/+500 | 01121 | CB1015 |
| A8R38 | 0683-1525 | 4 | | RESISTOR 1.5K 5% .25W FC TC=-400/+700 | 01121 | CB1525 |
| A8R39 | 0683-4705 | 8 | | RESISTOR 47 5% .25W FC TC=-400/+500 | 01121 | CB4705 |
| A8R40 | 0683-0475 | 1 | 1 | RESISTOR 4.7 5% .25W FC TC=-400/+500 | 01121 | CB47G5 |
| A8R41 | 0683-6805 | 3 | 4 | RESISTOR 68 5% .25W FC TC=-400/+500 | 01121 | CB6805 |
| A8R42 | 0683-6805 | 3 | | RESISTOR 68 5% .25W FC TC=-400/+500 | 01121 | CB6805 |
| A8R43 | 0683-1015 | 7 | | RESISTOR 100 5% .25W FC TC=-400/+500 | 01121 | CB1015 |
| A8R44 | 0683-1215 | 9 | 2 | RESISTOR 120 5% .25W FC TC=-400/+600 | 01121 | CB1215 |
| A8R45 | 0698-4431 | 8 | 2 | RESISTOR 2.05K 1% .125W F TC=0+-100 | 24546 | C4-1/8-T0-2051-F |
| A8R46 | 0683-4705 | 8 | | RESISTOR 47 5% .25W FC TC=-400/+500 | 01121 | CB4705 |
| A8R47 | 0757-0280 | 3 | | RESISTOR 1K 1% .125W F TC=0+-100 | 24546 | C4-1/8-T0-1001-F |
| A8R48 | 0683-2235 | 5 | | RESISTOR 22K 5% .25W FC TC=-400/+800 | 01121 | CB2235 |
| A8R49 | 0683-6805 | 3 | | RESISTOR 68 5% .25W FC TC=-400/+500 | 01121 | CB6805 |
| A8R50 | 0683-6805 | 3 | | RESISTOR 68 5% .25W FC TC=-400/+500 | 01121 | CB6805 |
| A8R51 | 0683-1045 | 3 | | RESISTOR 100K 5% .25W FC TC=-400/+800 | 01121 | CB1045 |
| A8R52 | 0683-1215 | 9 | | RESISTOR 120 5% .25W FC TC=-400/+600 | 01121 | CB1215 |
| A8R53 | 0683-1045 | 3 | | RESISTOR 100K 5% .25W FC TC=-400/+800 | 01121 | CB1045 |
| A8R54 | 2100-3211 | 8 | 2 | RESISTOR-TRMR 1K 10% C TOP-ADJ 1-TRN | | |
| A8R55 | 0698-6943 | 1 | 1 | RESISTOR 20K .1% .125W F TC=0+-50 | 28480 | 0698-6943 |
| A8R56 | 0698-4431 | 8 | | RESISTOR 2.05K 1% .125W F TC=0+-100 | 24546 | C4-1/8-T0-2051-F |
| A8R57 | 0757-0280 | 3 | | RESISTOR 1K 1% .125W F TC=0+-100 | 24546 | C4-1/8-T0-1001-F |
| A8R58 | 0683-2235 | 5 | | RESISTOR 22K 5% .25W FC TC=-400/+800 | 01121 | CB2235 |
| A8R59 | 0683-1045 | 3 | | RESISTOR 100K 5% .25W FC TC=-400/+800 | 01121 | CB1045 |
| A8R60 | 0698-6328 | 8 | 4 | RESISTOR 5K .1% .125W F TC=0+-25 | 03888 | PME55-1/8-T9-5001-B |
| A8R61 | 0757-0346 | 4 | 1 | RESISTOR 10 1% .125W F TC=0+-100 | | |
| A8R62 | 0683-1025 | 9 | | RESISTOR 1K 5% .25W FC TC=-400/+600 | 01121 | CB1025 |
| A8R63 | 0698-3156 | 2 | | RESISTOR 14.7K 1% .125W F TC=0+-100 | 24546 | C4-1/8-T0-1472-F |
| A8R64 | 0683-1025 | 9 | | RESISTOR 1K 5% .25W FC TC=-400/+600 | 01121 | CB1025 |
| A8R65 | 0698-3156 | 2 | | RESISTOR 14.7K 1% .125W F TC=0+-100 | 24546 | C4-1/8-T0-1472-F |
| A8R66 | 0698-6320 | 8 | | RESISTOR 5K .1% .125W F TC=0+-25 | 03888 | PME55-1/8-T9-5001-B |
| A8R67 | 0698-6320 | 8 | | RESISTOR 5K .1% .125W F TC=0+-25 | 03888 | PME55-1/8-T9-5001-B |
| A8R68 | 0698-6320 | 8 | | RESISTOR 5K .1% .125W F TC=0+-25 | 03888 | PME55-1/8-T9-5001-B |
| A8R69 | 0683-1015 | 7 | | RESISTOR 100 5% .25W FC TC=-400/+500 | 01121 | CB1015 |
| A8R70 | 0683-1535 | 6 | 2 | RESISTOR 15K 5% .25W FC TC=-400/+800 | 01121 | CB1535 |
| A8R71 | 2100-3212 | 8 | | RESISTOR-TRMR 200 10% C TOP-ADJ 1-TRN | 28480 | 2100-3212 |
| A8R72 | 0683-1045 | 3 | | RESISTOR 100K 5% .25W FC TC=-400/+800 | 01121 | CB1045 |
| A8R73 | 0683-1015 | 7 | | RESISTOR 100 5% .25W FC TC=-400/+500 | 01121 | CB1015 |
| A8R74 | 0683-1535 | 6 | | RESISTOR 15K 5% .25W FC TC=-400/+800 | 01121 | CB1535 |
| A8R76 | 0683-4735 | | | RESISTOR 47K 5% .25W FC TC=-400/+800 | | |
| A8R77, R78 | 0683-1015 | | | RESISTOR 100 5% .25W | | |
| A8R79 | 0683-1025 | | | RESISTOR 1K 5% .25W | | |
| A8R80 | 0683-3335 | | | RESISTOR 33K 5% .25W | | |

See introduction to this section for ordering information
*Indicates factory selected value

## Table 6-3. Replaceable Parts

| Reference Designation | HP Part Number | CD | Qty | Description | Mfr Code | Mfr Part Number |
|---|---|---|---|---|---|---|
| A8T1 | 9100-0822 | 7 | | TRANSFORMER:PULSE(11307) | 28480 | 9100-0822 |
| A8T2 | 9100-0822 | 7 | | TRANSFORMER:PULSE(11307) | 28480 | 9100-0822 |
| A8T3 | 9100-0857 | 8 | 2 | TRANSFORMER-PULSE 114H1 | 28480 | 9100-0857 |
| A8T4 | 9100-0857 | 8 | | TRANSFORMER-PULSE 114H1 | 28480 | 9100-0857 |
| A8T5 | 9100-0822 | 7 | | TRANSFORMER:PULSE(11307) | 28480 | 9100-0822 |
| A8T6 | 04192-61801 | 2 | 3 | TRANSFORMER-PULSE | 28480 | 04192-61801 |
| A8T7 | 9100-0855 | 6 | | TRANSFORMER-PULSE 113G1 | 28480 | 9100-0855 |
| A8T8 | 9100-0855 | 6 | | TRANSFORMER-PULSE 113G1 | 28480 | 9100-0855 |
| A8T9 | 9100-0822 | 7 | | TRANSFORMER:PULSE(11307) | 28480 | 9100-0822 |
| A8T10 | 04192-61801 | 2 | | TRANSFORMER-PULSE | 28480 | 04192-61801 |
| A8T11 | 9100-0855 | 6 | | TRANSFORMER-PULSE 113G1 | 28480 | 9100-0855 |
| A8T12 | 9100-0855 | 6 | | TRANSFORMER-PULSE 113G1 | 28480 | 9100-0855 |
| A8T13 | 9100-0822 | 7 | | TRANSFORMER:PULSE(11307) | 28480 | 9100-0822 |
| A8T14 | 04192-61801 | 2 | | TRANSFORMER-PULSE | 28480 | 04192-61801 |
| A8T15 | 9100-0855 | 6 | | TRANSFORMER-PULSE 113G1 | 28480 | 9100-0855 |
| A8T16 | 9100-0855 | 6 | | TRANSFORMER-PULSE 113G1 | 28480 | 9100-0855 |
| A8T17 | 9100-0855 | 6 | | TRANSFORMER-PULSE 113G1 | 28480 | 9100-0855 |
| A8T18 | 9100-0855 | 6 | | TRANSFORMER-PULSE 113G1 | 28480 | 9100-0855 |
| A8T19 | 9100-0855 | 6 | | TRANSFORMER-PULSE 113G1 | 28480 | 9100-0855 |
| A8T20 | 9100-0822 | 7 | | TRANSFORMER:PULSE(11307) | 28480 | 9100-0822 |
| A8T21 | 04192-61802 | 3 | 1 | TRANSFORMER-PULSE | 28480 | 04192-61802 |
| A8T22 | 9100-0855 | 6 | | TRANSFORMER-PULSE 113G1 | 28480 | 9100-0855 |
| A8T23 | 9100-0855 | 6 | | TRANSFORMER-PULSE 113G1 | 28480 | 9100-0855 |
| A8T24 | 9100-0855 | 6 | | TRANSFORMER-PULSE 113G1 | 28480 | 9100-0855 |
| A8U1 | 1820-0567 | 5 | 1 | IC MV TTL DUAL | 04713 | MC4024P |
| A8U2 | 1826-0274 | 3 | 1 | IC 78L15A V RGLTR TO-92 | 04713 | MC78L15ACP |
| A8U3 | 1826-0281 | 2 | 1 | IC V RGLTR TO-92 | 04713 | MC79L15ACP |
| A8U4 | 1826-0122 | 0 | 1 | IC 7805 V RGLTR TO-220 | 07263 | 7805UC |
| A8U5 | 1820-1433 | 6 | | IC SHF-RGTR TTL LS R-S SERIAL-IN PRL-OUT | 01295 | SN74LS164N |
| A8U6 | 1820-1433 | 6 | | IC SHF-RGTR TTL LS R-S SERIAL-IN PRL-OUT | 01295 | SN74LS164N |
| A8U7 | 1820-1196 | 8 | | IC FF TTL LS D-TYPE POS-EDGE-TRIG COM | 01295 | SN74LS174N |
| A8U8 | 1820-1196 | 8 | | IC FF TTL LS D-TYPE POS-EDGE-TRIG COM | 01295 | SN74LS174N |
| A8U9 | 1826-0161 | 7 | 4 | IC OP AMP GP QUAD 14-DIP-P PKG | 04713 | MLM324P |
| A8U10 | 1826-0161 | 7 | | IC OP AMP GP QUAD 14-DIP-P PKG | 04713 | MLM324P |
| A8U11 | 1826-0161 | 7 | | IC OP AMP GP QUAD 14-DIP-P PKG | 04713 | MLM324P |
| A8U12 | 1826-0161 | 7 | | IC OP AMP GP QUAD 14-DIP-P PKG | 04713 | MLM324P |
| A8U13 | 5080-3848 | 2 | 1 | IC CONV 12-B-D/A 24-DIP-C PKG | 8E175 | DAC80-CBI-V |
| A8U14 | 1826-0266 | 4 | | IC OP AMP LOW-DRIFT TO-99 PKG | 06665 | OP-05EJ |
| A8U15 | 1826-0266 | 4 | | IC OP AMP LOW-DRIFT TO-99 PKG | 06665 | OP-05EJ |
| A8U16 | 1826-0035 | 4 | | IC OP AMP LOW-DRIFT TO-99 PKG | 27014 | LM308AH |
| | 3050-0082 | 8 | | WASHER-FL NM NO. 4 .116-IN-ID .188-IN-OD | 28480 | 3050-0082 |
| A9 | 04192-66509 | 7 | 1 | ANALOG RECORDER OUTPUT BOARD ASSEMBLY | 28480 | 04192-66509 |
| A9C1 | 0180-1050 | 4 | | CAPACITOR-FXD 100UF 25VDC | 28480 | 0180-1050 |
| A9C2 | 0180-1066 | 2 | 2 | CAPACITOR, FXD 47 MF AL | 28480 | 0180-1066 |
| A9C3 | 0180-1066 | 2 | | CAPACITOR, FXD 47 MF AL | 28480 | 0180-1066 |
| A9C4 | 0160-0127 | 9 | | CAPACITOR-FXD 1U 20% 50VDC CER | | |
| A9C5 | 0160-0127 | 9 | | CAPACITOR-FXD 1U 20% 50VDC CER | | |
| A9C6 | 0160-0127 | 9 | | CAPACITOR-FXD 1U 20% 50VDC CER | | |
| A9C7 | 0160-3847 | 9 | | CAPACITOR-FXD .01UF +100-0% 50VDC CER | 28480 | 0160-3847 |
| A9C8 | 0160-2009 | 3 | 2 | CAPACITOR-FXD 820PF +-5% 300VDC MICA | 28480 | 0160-2009 |
| A9C9 | 0160-3847 | 9 | | CAPACITOR-FXD .01UF +100-0% 50VDC CER | 28480 | 0160-3847 |
| A9C10 | 0160-3847 | 9 | | CAPACITOR-FXD .01UF +100-0% 50VDC CER | 28480 | 0160-3847 |
| A9C11 | 0160-3847 | 9 | | CAPACITOR-FXD .01UF +100-0% 50VDC CER | 28480 | 0160-3847 |
| A9C12 | 0160-2009 | 3 | | CAPACITOR-FXD 820PF +-5% 300VDC MICA | 28480 | 0160-2009 |
| A9C13 | 0160-3847 | 9 | | CAPACITOR-FXD .01UF +100-0% 50VDC CER | 28480 | 0160-3847 |
| A9C14 | 0160-3847 | 9 | | CAPACITOR-FXD .01UF +100-0% 50VDC CER | 28480 | 0160-3847 |
| A9CR1 | 1902-0777 | 3 | 1 | DIODE-ZNR 1N825 6.2V 5% DO-7 PD=.4W | 04713 | 1N825 |
| A9CR2 | 1902-0041 | 4 | | DIODE-ZNR 5.11V 5% DO-35 PD=.4W | 28480 | 1902-0041 |
| A9J1 | 1200-0607 | 0 | | SOCKET-IC 16-CONT DIP DIP-SLDR | 28480 | 1200-0607 |
| A9J2 | 1251-0513 | 4 | | CONNECTOR 5-PIN M POST TYPE | 28480 | 1251-0513 |
| A9J3 | 1251-6527 | 2 | | CONNECTOR-6-PIN MALE | 28480 | 1251-6527 |
| A9L1 | 9140-0114 | 4 | | INDUCTOR RF-CH-MLD 10UH 10% .166DX.385LG | 28480 | 9140-0114 |
| A9L2 | 9140-0129 | 1 | | INDUCTOR RF-CH-MLD 220UH 5% .166DX.385LG | 28480 | 9140-0129 |
| A9L3 | 9140-0129 | 1 | | INDUCTOR RF-CH-MLD 220UH 5% .166DX.385LG | 28480 | 9140-0129 |
| A9R1 | 0683-1025 | 9 | | RESISTOR 1K 5% .25W FC TC=-400/+600 | 01121 | CB1025 |
| A9R2 | 0683-1025 | 9 | | RESISTOR 1K 5% .25W FC TC=-400/+600 | 01121 | CB1025 |
| A9R3 | 0698-3153 | 9 | | RESISTOR 3.83K 1% .125W F TC=0+-100 | 24546 | C4-1/8-T0-3831-F |
| A9R4 | 0757-0279 | 0 | | RESISTOR 3.16K 1% .125W F TC=0+-100 | 24546 | C4-1/8-T0-3161-F |
| A9R5 | 2100-3211 | 7 | | RESISTOR-TRMR 1K 10% C TOP-ADJ 1-TRN | 28480 | 2100-3211 |
| A9R6 | 2100-0554 | 5 | 3 | RESISTOR-TRMR 500 10% C TOP-ADJ 1-TRN | 28480 | 2100-0554 |
| A9R7 | 0757-0274 | 5 | | RESISTOR 1.21K 1% .125W F TC=0+-100 | 24546 | C4-1/8-T0-1211-F |
| A9R8 | 0683-1025 | 9 | | RESISTOR 1K 5% .25W FC TC=-400/+600 | 01121 | CB1025 |
| A9R9 | 0757-0421 | 4 | | RESISTOR 825 1% .125W F TC=0+-100 | 24546 | C4-1/8-T0-825R-F |
| A9R10 | 0698-5453 | 6 | 5 | RESISTOR 900 .1% .125W F TC=0+-50 | 03888 | PME55 T-2-900R-B |

See introduction to this section for ordering information
*Indicates factory selected value

## Table 6-3. Replaceable Parts

| Reference Designation | HP Part Number | C D | Qty | Description | Mfr Code | Mfr Part Number |
|---|---|---|---|---|---|---|
| A9R11 | 0698-5453 | 6 | | RESISTOR 900 .1% .125W F TC=0+-50 | 03888 | PME55 T-2-900R-B |
| A9R12 | 0757-0278 | 9 | | RESISTOR 1.78K 1% .125W F TC=0+-100 | 24546 | C4-1/8-T0-1781-F |
| A9R13 | 0757-0290 | 5 | | RESISTOR 6.19K 1% .125W F TC=0+-100 | 19701 | MF4C1/8-T0-6191-F |
| A9R14 | 0683-1035 | 1 | | RESISTOR 10K 5% .25W FC TC=-400/+700 | 01121 | CB1035 |
| A9R15 | 0683-1035 | 1 | | RESISTOR 10K 5% .25W FC TC=-400/+700 | 01121 | CB1035 |
| A9R16 | 0683-1035 | 1 | | RESISTOR 10K 5% .25W FC TC=-400/+700 | 01121 | CB1035 |
| A9R17 | 0683-1035 | 1 | | RESISTOR 10K 5% .25W FC TC=-400/+700 | 01121 | CB1035 |
| A9R18 | 0757-0421 | 4 | | RESISTOR 825 1% .125W F TC=0+-100 | 24546 | C4-1/8-T0-825R-F |
| A9R19 | 0698-5453 | 6 | | RESISTOR 900 .1% .125W F TC=0+-50 | 03888 | PME55 T-2-900R-B |
| A9R20 | 0698-5453 | 6 | | RESISTOR 900 .1% .125W F TC=0+-50 | 03888 | PME55 T-2-900R-B |
| A9R21 | 0698-5453 | 6 | | RESISTOR 900 .1% .125W F TC=0+-50 | 03888 | PME55 T-2-900R-B |
| A9R22 | 0698-3153 | 9 | | RESISTOR 3.83K 1% .125W F TC=0+-100 | 24546 | C4-1/8-T0-3831-F |
| A9R23 | 0757-0279 | 0 | | RESISTOR 3.16K 1% .125W F TC=0+-100 | 24546 | C4-1/8-T0-3161-F |
| A9R24 | 2100-3211 | 7 | | RESISTOR-TRMR 1K 10% C TOP-ADJ 1-TRN | 28480 | 2100-3211 |
| A9R25 | 2100-3211 | 7 | | RESISTOR-TRMR 1K 10% C TOP-ADJ 1-TRN | 28480 | 2100-3211 |
| A9R26 | 0757-0279 | 0 | | RESISTOR 3.16K 1% .125W F TC=0+-100 | 24546 | C4-1/8-T0-3161-F |
| A9R27 | 0698-3153 | 9 | | RESISTOR 3.83K 1% .125W F TC=0+-100 | 24546 | C4-1/8-T0-3831-F |
| A9R28 | 0757-04vn | 4 | | RESISTOR 6.81K 1% .125W F TC=0+-100 | 24546 | C4-1/8-T0-6811-F |
| A9R29 | 0757-0279 | 0 | | RESISTOR 3.16K 1% .125W F TC=0+-100 | 24546 | C4-1/8-T0-3161-F |
| A9U1 | 1820-1433 | 6 | | IC SHF-RGTR TTL LS R-S SERIAL-IN PRL-OUT | 01295 | SN74LS164N |
| A9U2 | 1820-1433 | 6 | | IC SHF-RGTR TTL LS R-S SERIAL-IN PRL-OUT | 01295 | SN74LS164N |
| A9U3 | 1820-1730 | 6 | | IC FF TTL LS D-TYPE POS-EDGE-TRIG COM | 01295 | SN74LS273N |
| A9U4 | 1826-0462 | 1 | 3 | IC CONV 10-B-D/A 16-DIP-C PKG | 04713 | MC3410CL |
| A9U5 | 1826-0502 | 0 | 3 | IC SWITCH ANLG QUAD 14-DIP-P PKG | 04713 | MC14066BCP |
| A9U6 | 1826-0522 | 4 | | IC OP AMP QUAD 14-DIP-P PKG | 01295 | TL074CN |
| A9U7 | 1820-1433 | 6 | | IC SHF-RGTR TTL LS R-S SERIAL-IN PRL-OUT | 01295 | SN74LS164N |
| A9U8 | 1826-0138 | 8 | | IC COMPARATOR GP QUAD 14-DIP-P PKG | 01295 | LM339N |
| A9U9 | 1820-1433 | 6 | | IC SHF-RGTR TTL LS R-S SERIAL-IN PRL-OUT | 01295 | SN74LS164N |
| A9U10 | 1820-1730 | 6 | | IC FF TTL LS D-TYPE POS-EDGE-TRIG COM | 01295 | SN74LS273N |
| A9U11 | 1826-0462 | 1 | | IC CONV 10-B-D/A 16-DIP-C PKG | 04713 | MC3410CL |
| A9U12 | 1826-0462 | 1 | | IC CONV 10-B-D/A 16-DIP-C PKG | 04713 | MC3410CL |
| A10 | 04192-66510 | 0 | | BATTERY AND CHARGER BOARD ASSEMBLY | 28480 | 04192-66510 |
| A10BT1 | 1420-0377 | 4 | 2 | BATTERY-NI-CD | 28480 | |
| A10BT2 | 1420-0377 | 4 | | BATTERY-NI-CD | 28480 | |
| A10R1 | 0683-1815 | 9 | | RESISTOR 180Ω 5% .25W FC TC=-400/+600 | 01121 | |
| | 1400-0493 | 6 | 1 | CABLE TIE | 28480 | 1400-0493 |
| A11 | 04192-66511 | 1 | 1 | PROCESS AMPLIFIER BOARD ASSEMBLY (NOT INCLUDING THE SHIELD CASES) | 28480 | 04192-66511 |
| A11C1 | 0180-1083 | 3 | | CAPACITOR-FXD 33UF 25VDC AL | 28480 | 0180-1083 |
| A11C2 | 0180-1083 | 3 | | CAPACITOR-FXD 33UF 25VDC AL | 28480 | 0180-1083 |
| A11C3 | 0180-0291 | 3 | | CAPACITOR-FXD 1UF+-10% 35VDC TA | 56289 | 150D105X9035A2 |
| A11C4 | 0160-4835 | 8 | | CAPACITOR-FXD .1UF 10% 50VDC CER | | |
| A11C5 | 0160-4835 | 8 | | CAPACITOR-FXD .1UF 10% 50VDC CER | | |
| A11C6 | 0180-1085 | 5 | | CAPACITOR-FXD 4.7UF 16VDC TA | 28480 | 0180-1085 |
| A11C7 | 0180-1083 | 3 | | CAPACITOR-FXD 33UF 25VDC AL | 28480 | 0180-1083 |
| A11C8 | 0180-1085 | 5 | | CAPACITOR-FXD 4.7UF 16VDC TA | 28480 | 0180-1085 |
| A11C9 | 0180-1085 | 5 | | CAPACITOR-FXD 4.7UF 16VDC TA | 28480 | 0180-1085 |
| A11C10 | 0180-1085 | 5 | | CAPACITOR-FXD 4.7UF 16VDC TA | 28480 | 0180-1085 |
| A11C11 | 0160-2241 | 5 | | CAPACITOR-FXD 2.2PF +-.25PF 500VDC CER | 28480 | 0160-2241 |
| A11C12 | 0180-1085 | 5 | | CAPACITOR-FXD 4.7UF 16VDC TA | 28480 | 0180-1085 |
| A11C13 | 0160-4835 | 8 | | CAPACITOR-FXD .1UF 10% 50VDC CER | | |
| A11C14 | 0160-4835 | 8 | | CAPACITOR-FXD .1UF 10% 50VDC CER | | |
| A11C15 | 0160-2234 | 6 | | CAPACITOR-FXD .51PF +-.25PF 500VDC CER | 28480 | 0160-2234 |
| A11C16 | 0160-4835 | 8 | | CAPACITOR-FXD .1UF 10% 50VDC CER | | |
| A11C17 | 0160-4835 | 8 | | CAPACITOR-FXD .1UF 10% 50VDC CER | | |
| A11C18 | 0160-2265 | 3 | | CAPACITOR-FXD 22PF +-5% 500VDC CER 0+-30 | 28480 | 0160-2265 |
| A11C19 | 0160-5138 | 5 | 2 | CAPACITOR-FXD 0.022UF | 28480 | 0160-5138 |
| A11C20 | 0160-2241 | 5 | | CAPACITOR-FXD 2.2PF +-.25PF 500VDC CER | 28480 | 0160-2241 |
| A11C21 | 0160-4835 | 8 | | CAPACITOR-FXD .1UF 10% 50VDC CER | | |
| A11C22 | 0180-1083 | 3 | | CAPACITOR-FXD 33UF 25VDC AL | 28480 | 0180-1083 |
| A11C23 | 0180-1083 | 3 | | CAPACITOR-FXD 33UF 25VDC AL | 28480 | 0180-1083 |
| A11C24 | 0160-4835 | 8 | | CAPACITOR-FXD .1UF 10% 50VDC CER | | |
| A11C25 | 0160-4835 | 8 | | CAPACITOR-FXD .1UF 10% 50VDC CER | | |
| A11C26 | 0160-2253 | 9 | | CAPACITOR-FXD 6.8PF +-.25PF 500VDC CER | 28480 | 0160-2253 |
| A11C27 | 0160-2253 | 9 | | CAPACITOR-FXD 6.8PF +-.25PF 500VDC CER | 28480 | 0160-2253 |
| A11C28 | 0160-2265 | 3 | | CAPACITOR-FXD 22PF +-5% 500VDC CER 0+-30 | 28480 | 0160-2265 |
| A11C29 | 0160-2234 | 6 | | CAPACITOR-FXD .51PF +-.25PF 500VDC CER | 28480 | 0160-2234 |
| A11C30 | 0160-2222 | 2 | | CAPACITOR-FXD 1500PF +-5% 300VDC MICA | 28480 | 0160-2222 |
| A11C31 | 0160-0161 | 4 | 4 | CAPACITOR-FXD .01UF +-10% 200VDC POLYE | 28480 | 0160-0161 |
| A11C32 | 0121-0131 | 6 | | CAPACITOR-V TRMR-AIR 1.5-4PF 350V PC-MTG | 74970 | 189-0501-028 |
| A11C33 | 0150-0059 | 8 | 7 | CAPACITOR-FXD 3.3PF +-.25PF 500VDC CER | 28480 | 0150-0059 |
| A11C34 | 0180-1085 | 5 | | CAPACITOR-FXD 4.7UF 16VDC TA | 28480 | 0180-1085 |
| A11C35 | 0160-3466 | 8 | | CAPACITOR-FXD 100PF +-10% 1KVDC CER | 28480 | 0160-3466 |

See introduction to this section for ordering information
*Indicates factory selected value

## Table 6-3. Replaceable Parts

| Reference Designation | HP Part Number | C D | Qty | Description | Mfr Code | Mfr Part Number |
|---|---|---|---|---|---|---|
| A11C36 | 0160-3456 | 6 | | CAPACITOR-FXD 1000PF +-10% 1KVDC CER | 28480 | 0160-3456 |
| A11C37 | 0160-4835 | 8 | | CAPACITOR-FXD .1UF 10% 50VDC CER | | |
| A11C38 | 0180-1083 | 3 | | CAPACITOR-FXD 33UF 25VDC AL | 28480 | 0180-1083 |
| A11C39 | 0160-2234 | 6 | | CAPACITOR-FXD .51PF +-.25PF 500VDC CER | 28480 | 0160-2234 |
| A11C40 | 0150-0059 | 8 | | CAPACITOR-FXD 3.3PF +-.25PF 500VDC CER | 28480 | 0150-0059 |
| A11C41 | 0160-0161 | 4 | | CAPACITOR-FXD .01UF +-10% 200VDC POLYE | 28480 | 0160-0161 |
| A11C42 | 0180-1083 | 3 | | CAPACITOR-FXD 33UF 25VDC AL | 28480 | 0180-1083 |
| A11C43 | 0160-4835 | 8 | | CAPACITOR-FXD .1UF 10% 50VDC CER | | |
| A11C44 | 0160-4835 | 8 | | CAPACITOR-FXD .1UF 10% 50VDC CER | | |
| A11C45 | 0150-0059 | 8 | | CAPACITOR-FXD 3.3PF +-.25PF 500VDC CER | 28480 | 0150-0059 |
| A11C46 | 0160-3454 | 4 | | CAPACITOR-FXD 220PF +-10% 1KVDC CER | 28480 | 0160-3454 |
| A11C47 | 0160-3454 | 4 | | CAPACITOR-FXD 220PF +-10% 1KVDC CER | 28480 | 0160-3454 |
| A11C48 | 0180-1085 | 5 | | CAPACITOR-FXD 4.7UF 16VDC TA | 28480 | 0180-1085 |
| A11C49 | 0160-3094 | 8 | | CAPACITOR-FXD .1UF ±10% 50VDC CER | | |
| A11C50 | 0160-0127 | 2 | | CAPACITOR-FXD 1UF +-20% 25VDC CER | 28480 | 0160-0127 |
| A11C51 | 0160-5140 | 9 | 2 | CAPACITOR-FXD 2.2 UF 2% | 28480 | 0160-5140 |
| A11C52 | 0121-0162 | 3 | 1 | CAPACITOR-V TRMR-AIR 1.2-3.5PF 350V | 0859C | 10-1326-25004-910 |
| A11C53 | 0160-4835 | 8 | | CAPACITOR-FXD .1UF 10% 50VDC CER | | |
| A11C54 | 0160-4835 | 8 | | CAPACITOR-FXD .1UF 10% 50VDC CER | | |
| A11C55 | 0160-2253 | 9 | | CAPACITOR-FXD 6.8PF +-.25PF 500VDC CER | 28480 | 0160-2253 |
| A11C56 | 0160-2253 | 9 | | CAPACITOR-FXD 6.8PF +-.25PF 500VDC CER | 28480 | 0160-2253 |
| A11C57 | 0160-2265 | 3 | | CAPACITOR-FXD 22PF +-5% 500VDC CER 0+-30 | 28480 | 0160-2265 |
| A11C58 | 0160-2265 | 3 | | CAPACITOR-FXD 22PF +-5% 500VDC CER 0+-30 | 28480 | 0160-2265 |
| A11C59 | 0160-2218 | 6 | 1 | CAPACITOR-FXD 1000PF +-5% 300VDC MICA | 28480 | 0160-2218 |
| A11C60 | 0140-0190 | 7 | 1 | CAPACITOR-FXD 39PF +-5% 300VDC MICA | 72136 | DM15E390J0300WV1CR |
| A11C61 | 0160-4835 | 8 | | CAPACITOR-FXD .1UF 10% 50VDC CER | | |
| A11C62 | 0160-4835 | 8 | | CAPACITOR-FXD .1UF 10% 50VDC CER | | |
| A11C63 | 0180-1083 | 3 | | CAPACITOR-FXD 33UF 25VDC AL | 28480 | 0180-1083 |
| A11C64 | 0121-0061 | 1 | 3 | CAPACITOR-V TRMR-CER 5.5-18PF 350V | 52763 | 304322 5.5/18PF NPO |
| A11C65 | 0180-1085 | 5 | | CAPACITOR-FXD 4.7UF 16VDC TA | 28480 | 0180-1085 |
| A11C66 | 0160-2241 | 5 | | CAPACITOR-FXD 2.2PF +-.25PF 500VDC CER | 28480 | 0160-2241 |
| A11C67 | 0180-1085 | 5 | | CAPACITOR-FXD 4.7UF 16VDC TA | 28480 | 0180-1085 |
| A11C68 | 0160-4835 | 8 | | CAPACITOR-FXD .1UF 10% 50VDC CER | | |
| A11C69 | 0160-4835 | 8 | | CAPACITOR-FXD .1UF 10% 50VDC CER | | |
| A11C70 | 0180-1085 | 5 | | CAPACITOR-FXD 4.7UF 16VDC TA | 28480 | 0180-1085 |
| A11C71 | 0121-0061 | 1 | | CAPACITOR-V TRMR-CER 5.5-18PF 350V | 52763 | 304322 5.5/18PF NPO |
| A11C72 | 0150-0059 | 8 | | CAPACITOR-FXD 3.3PF +-.25PF 500VDC CER | 28480 | 0150-0059 |
| A11C73 | 0160-0161 | 4 | | CAPACITOR-FXD .01UF +-10% 200VDC POLYE | 28480 | 0160-0161 |
| A11C74 | 0121-0061 | 1 | | CAPACITOR-V TRMR-CER 5.5-18PF 350V | 52763 | 304322 5.5/18PF NPO |
| A11C75 | 0150-0059 | 8 | | CAPACITOR-FXD 3.3PF +-.25PF 500VDC CER | 28480 | 0150-0059 |
| A11C76 | 0160-5138 | 5 | | CAPACITOR-FXD 0.022UF | 28480 | 0160-5138 |
| A11C77 | 0150-0059 | 8 | | CAPACITOR-FXD 3.3PF +-.25PF 500VDC CER | 28480 | 0150-0059 |
| A11C78 | 0160-2241 | 5 | | CAPACITOR-FXD 2.2PF +-.25PF 500VDC CER | 28480 | 0160-2241 |
| A11C79 | 0160-4835 | 8 | | CAPACITOR-FXD .1UF 10% 50VDC CER | | |
| A11C80 | 0150-0059 | 8 | | CAPACITOR-FXD 3.3PF +-.25PF 500VDC CER | 28480 | 0150-0059 |
| A11C81 | 0180-1085 | 5 | | CAPACITOR-FXD 4.7UF 16VDC TA | 28480 | 0180-1085 |
| A11C82 | 0160-3466 | 8 | | CAPACITOR-FXD 100PF +-10% 1KVDC CER | 28480 | 0160-3466 |
| A11C83 | 0160-3456 | 6 | | CAPACITOR-FXD 1000PF +-10% 1KVDC CER | 28480 | 0160-3456 |
| A11C84 | 0160-4835 | 8 | | CAPACITOR-FXD .1UF 10% 50VDC CER | | |
| A11C85 | 0180-1083 | 3 | | CAPACITOR-FXD 33UF 25VDC AL | 28480 | 0180-1083 |
| A11C86 | 0180-1083 | 3 | | CAPACITOR-FXD 33UF 25VDC AL | 28480 | 0180-1083 |
| A11C87 | 0160-2306 | 3 | 1 | CAPACITOR-FXD 27PF +-5% 300VDC MICA | 28480 | 0160-2306 |
| A11C88 | 0140-0191 | 8 | | CAPACITOR-FXD 56PF +-5% 300VDC MICA | 72136 | DM15E560J0300WV1CR |
| A11C89 | 0160-4835 | 8 | | CAPACITOR-FXD .1UF 10% 50VDC CER | | |
| A11C90 | 0160-4835 | 8 | | CAPACITOR-FXD .1UF 10% 50VDC CER | | |
| A11C91 | 0160-4835 | 8 | | CAPACITOR-FXD .1UF 10% 50VDC CER | | |
| A11C92 | 0160-4835 | 8 | | CAPACITOR-FXD .1UF 10% 50VDC CER | | |
| A11C93 | 0160-0161 | 4 | | CAPACITOR-FXD .01UF +-10% 200VDC POLYE | 28480 | 0160-0161 |
| A11C94 | 0180-1085 | 5 | | CAPACITOR-FXD 4.7UF 16VDC TA | 28480 | 0180-1085 |
| A11C95 | 0160-3094 | 8 | | CAPACITOR-FXD .1UF ±10% 50VDC CER | | |
| A11C96 | 0160-0127 | 2 | | CAPACITOR-FXD 1UF +-20% 25VDC CER | 28480 | 0160-0127 |
| A11C97 | 0160-5140 | 9 | | CAPACITOR-FXD 2.2 UF 2% | 28480 | 0160-5140 |
| A11C98 | 0160-4835 | 8 | | CAPACITOR-FXD .1UF 10% 50VDC CER | | |
| A11C99 | 0180-1085 | 5 | | CAPACITOR-FXD 4.7UF 16VDC TA | 28480 | 0180-1085 |
| A11C100 | 0180-0197 | 8 | | CAPACITOR-FXD 2.2UF+-10% 20VDC TA | 56289 | 150D225X9020A2 |
| A11C101 | 0180-1083 | 3 | | CAPACITOR-FXD 33UF 25VDC AL | 28480 | 0180-1083 |
| A11C102 | 0180-1083 | 3 | | CAPACITOR-FXD 33UF 25VDC AL | 28480 | 0180-1083 |
| A11C103 | 0180-1083 | 3 | | CAPACITOR-FXD 33UF 25VDC AL | 28480 | 0180-1083 |
| A11C104 | 0180-1083 | 3 | | CAPACITOR-FXD 33UF 25VDC AL | 28480 | 0180-1083 |
| A11C105 | 0160-3466 | 8 | | CAPACITOR-FXD 100PF +-10% 1KVDC CER | 28480 | 0160-3466 |
| A11C106 | 0160-3466 | 8 | | CAPACITOR-FXD 100PF +-10% 1KVDC CER | 28480 | 0160-3466 |
| A11C107 | 0160-3466 | 8 | | CAPACITOR-FXD 100PF +-10% 1KVDC CER | 28480 | 0160-3466 |
| A11C108 | 0160-3466 | 8 | | CAPACITOR-FXD 100PF +-10% 1KVDC CER | 28480 | 0160-3466 |
| A11C109 | 0160-3466 | 8 | | CAPACITOR-FXD 100PF +-10% 1KVDC CER | 28480 | 0160-3466 |
| A11C110 | 0160-3466 | 8 | | CAPACITOR-FXD 100PF +-10% 1KVDC CER | 28480 | 0160-3466 |
| A11C111 | 0160-3466 | 8 | | CAPACITOR-FXD 100PF +-10% 1KVDC CER | 28480 | 0160-3466 |

See introduction to this section for ordering information
*Indicates factory selected value

## Table 6-3. Replaceable Parts

| Reference Designation | HP Part Number | C D | Qty | Description | Mfr Code | Mfr Part Number |
|---|---|---|---|---|---|---|
| A11CR1 | 1901-0050 | 3 | | DIODE-SWITCHING 80V 200MA 2NS DO-35 | 28480 | 1901-0050 |
| A11CR2 | 1902-0064 | 1 | | DIODE-ZNR 7.5V 5% DO-35 PD=.4W TC=+.05% | 28480 | 1902-0064 |
| A11CR3 | 1902-0064 | 1 | | DIODE-ZNR 7.5V 5% DO-35 PD=.4W TC=+.05% | 28480 | 1902-0064 |
| A11CR4 | 1902-3059 | 0 | | DIODE-ZNR 3.83V 5% DO-35 PD=.4W | 28480 | 1902-3059 |
| A11CR5 | 1901-0050 | 3 | | DIODE-SWITCHING 80V 200MA 2NS DO-35 | 28480 | 1901-0050 |
| A11CR6 | 1901-0050 | 3 | | DIODE-SWITCHING 80V 200MA 2NS DO-35 | 28480 | 1901-0050 |
| A11CR7 | 1901-0376 | 6 | | DIODE-GEN PRP 35V 50MA DO-35 | 28480 | 1901-0376 |
| A11CR8 | 1901-0050 | 3 | | DIODE-SWITCHING 80V 200MA 2NS DO-35 | 28480 | 1901-0050 |
| A11CR9 | 1902-3037 | 4 | 2 | DIODE-ZNR 3.16V 2% DO-7 PD=.4W TC=-.064% | 28480 | 1902-3037 |
| A11CR10 | 1901-0376 | 6 | | DIODE-GEN PRP 35V 50MA DO-35 | 28480 | 1901-0376 |
| A11CR11 | 1901-0376 | 6 | | DIODE-GEN PRP 35V 50MA DO-35 | 28480 | 1901-0376 |
| A11CR12 | 1901-0050 | 3 | | DIODE-SWITCHING 80V 200MA 2NS DO-35 | 28480 | 1901-0050 |
| A11CR13 | 1902-3059 | 0 | | DIODE-ZNR 3.83V 5% DO-35 PD=.4W | 28480 | 1902-3059 |
| A11CR14 | 1901-0050 | 3 | | DIODE-SWITCHING 80V 200MA 2NS DO-35 | 28480 | 1901-0050 |
| A11CR15 | 1901-0050 | 3 | | DIODE-SWITCHING 80V 200MA 2NS DO-35 | 28480 | 1901-0050 |
| A11CR16 | 1901-0050 | 3 | | DIODE-SWITCHING 80V 200MA 2NS DO-35 | 28480 | 1901-0050 |
| A11CR17 | 1902-3059 | 0 | | DIODE-ZNR 3.83V 5% DO-35 PD=.4W | 28480 | 1902-3059 |
| A11CR18 | 1901-0050 | 3 | | DIODE-SWITCHING 80V 200MA 2NS DO-35 | 28480 | 1901-0050 |
| A11CR19 | 1901-0050 | 3 | | DIODE-SWITCHING 80V 200MA 2NS DO-35 | 28480 | 1901-0050 |
| A11CR20 | 1901-0376 | 6 | | DIODE-GEN PRP 35V 50MA DO-35 | 28480 | 1901-0376 |
| A11CR21 | 1901-0050 | 3 | | DIODE-SWITCHING 80V 200MA 2NS DO-35 | 28480 | 1901-0050 |
| A11CR22 | 1902-3037 | 4 | | DIODE-ZNR 3.16V 2% DO-7 PD=.4W TC=-.064% | 28480 | 1902-3037 |
| A11CR23 | 1901-0376 | 6 | | DIODE-GEN PRP 35V 50MA DO-35 | 28480 | 1901-0376 |
| A11CR24 | 1901-0376 | 6 | | DIODE-GEN PRP 35V 50MA DO-35 | 28480 | 1901-0376 |
| A11CR25 | 1901-0050 | 3 | | DIODE-SWITCHING 80V 200MA 2NS DO-35 | 28480 | 1901-0050 |
| A11CR26 | 1902-3059 | 0 | | DIODE-ZNR 3.83V 5% DO-35 PD=.4W | 28480 | 1902-3059 |
| A11CR27 | 1901-0050 | 3 | | DIODE-SWITCHING 80V 200MA 2NS DO-35 | 28480 | 1901-0050 |
| A11CR28-CR31 | 1901-0050 | | | DIODE-SWITCHING 80V 200MA 2NS DO-35 | 28480 | 1901-0050 |
| A11J1 | 1251-4822 | 6 | | CONNECTOR 3-PIN M POST TYPE | 28480 | 1251-4822 |
| A11J2 | 1251-0513 | 4 | | CONNECTOR 5-PIN M POST TYPE | 28480 | 1251-0513 |
| A11J3 | 1250-0257 | 1 | | CONNECTOR-RF SMB M PC 50-OHM | 28480 | 1250-0257 |
| A11J4 | 1200-0607 | 0 | | SOCKET-IC 16-CONT DIP DIP-SLDR | 28480 | 1200-0607 |
| A11J6 | 1250-0257 | 1 | | CONNECTOR-RF SMB M PC 50-OHM | 28480 | 1250-0257 |
| A11J7 | 1200-0607 | 0 | | SOCKET-IC 16-CONT DIP DIP-SLDR | 28480 | 1200-0607 |
| A11J8 | 1200-0541 | 1 | | SOCKET-IC 24-CONT DIP DIP-SLDR | 28480 | 1200-0541 |
| A11J9 | 1251-5066 | 2 | 1 | CONNECTOR 2-PIN M METRIC POST TYPE | 28480 | 1251-5066 |
| A11J11 | 1251-4938 | 5 | | CONNECTOR 3-PIN M METRIC POST TYPE | 28480 | 1251-4938 |
| A11J12 | 1250-0257 | 1 | | CONNECTOR-RF SMB M PC 50-OHM | 28480 | 1250-0257 |
| A11J13 | 1200-0607 | 0 | | SOCKET-IC 16-CONT DIP DIP-SLDR | 28480 | 1200-0607 |
| A11J14 | 1200-0796 | 8 | 2 | SOCKET-IC 8-CONT DIP DIP-SLDR | 28480 | 1200-0796 |
| A11J15 | 1200-0638 | 7 | | SOCKET-IC 14-CONT DIP DIP-SLDR | 28480 | 1200-0638 |
| A11J16 | 1200-0796 | 8 | | SOCKET-IC 8-CONT DIP DIP-SLDR | 28480 | 1200-0796 |
| A11J17 | 1200-0638 | 7 | | SOCKET-IC 14-CONT DIP DIP-SLDR | 28480 | 1200-0638 |
| A11K1 | 0490-1268 | 3 | 2 | RELAY-REED 2C 100MA 28VDC 12VDC-COIL 4VA | 28480 | 0490-1268 |
| A11K2 | 0490-1268 | 3 | | RELAY-REED 2C 100MA 28VDC 12VDC-COIL 4VA | 28480 | 0490-1268 |
| A11L1 | 9140-0129 | 1 | | INDUCTOR RF-CH-MLD 220UH 5% .166DX.385LG | 28480 | 9140-0129 |
| A11L2 | 9140-0129 | 1 | | INDUCTOR RF-CH-MLD 220UH 5% .166DX.385LG | 28480 | 9140-0129 |
| A11L3 | 9140-0129 | 1 | | INDUCTOR RF-CH-MLD 220UH 5% .166DX.385LG | 28480 | 9140-0129 |
| A11L4 | 9140-0098 | 3 | | INDUCTOR RF-CH-MLD 2.2UH 10% | 28480 | 9140-0098 |
| A11L5 | 9140-0098 | 3 | | INDUCTOR RF-CH-MLD 2.2UH 10% | 28480 | 9140-0098 |
| A11L6 | 9140-0098 | 3 | | INDUCTOR RF-CH-MLD 2.2UH 10% | 28480 | 9140-0098 |
| A11L7 | 9140-0098 | 3 | | INDUCTOR RF-CH-MLD 2.2UH 10% | 28480 | 9140-0098 |
| A11L8 | 9140-0129 | 1 | | INDUCTOR RF-CH-MLD 220UH 5% .166DX.385LG | 28480 | 9140-0129 |
| A11L9 | 9140-0129 | 1 | | INDUCTOR RF-CH-MLD 220UH 5% .166DX.385LG | 28480 | 9140-0129 |
| A11L10 | 9140-0129 | 1 | | INDUCTOR RF-CH-MLD 220UH 5% .166DX.385LG | 28480 | 9140-0129 |
| A11L11 | 9140-0129 | 1 | | INDUCTOR RF-CH-MLD 220UH 5% .166DX.385LG | 28480 | 9140-0129 |
| A11L12 | 9140-0129 | 1 | | INDUCTOR RF-CH-MLD 220UH 5% .166DX.385LG | 28480 | 9140-0129 |
| A11L13 | 9140-0129 | 1 | | INDUCTOR RF-CH-MLD 220UH 5% .166DX.385LG | 28480 | 9140-0129 |
| A11L14 | 9140-0112 | 2 | 2 | INDUCTOR RF-CH-MLD 4.7UH 10% | 28480 | 9140-0112 |
| A11L15 | 9140-0112 | 2 | | INDUCTOR RF-CH-MLD 4.7UH 10% | 28480 | 9140-0112 |
| A11L16 | 9140-0129 | 1 | | INDUCTOR RF-CH-MLD 220UH 5% .166DX.385LG | 28480 | 9140-0129 |
| A11L17 | 9140-0129 | 1 | | INDUCTOR RF-CH-MLD 220UH 5% .166DX.385LG | 28480 | 9140-0129 |
| A11L18 | 9140-0129 | 1 | | INDUCTOR RF-CH-MLD 220UH 5% .166DX.385LG | 28480 | 9140-0129 |
| A11Q1 | 1854-0215 | 1 | | TRANSISTOR NPN SI PD=350MW FT=300MHZ | 04713 | 2N3904 |
| A11Q2 | 1853-0036 | 2 | | TRANSISTOR PNP SI PD=310MW FT=250MHZ | 28480 | 1853-0036 |
| A11Q3 | 1853-0354 | 7 | | TRANSISTOR PNP SI TO-92 PD=350MW | 28480 | 1853-0354 |
| A11Q4 | 1853-0354 | 7 | | TRANSISTOR PNP SI TO-92 PD=350MW | 28480 | 1853-0354 |
| A11Q5 | 1855-0091 | 3 | | TRANSISTOR J-FET N-CHAN D-MODE SI | 28480 | 1855-0091 |
| A11Q6 | 1853-0036 | 2 | | TRANSISTOR PNP SI PD=310MW FT=250MHZ | 28480 | 1853-0036 |
| A11Q7 | 1855-0125 | 4 | | TRANSISTOR-FET 2SK185 | 28480 | 1855-0125 |
| A11Q8 | 1854-1041 | 6 | | TRANSISTOR-NPN | 28480 | |
| A11Q9 | 1854-1041 | 6 | | TRANSISTOR-NPN | 28480 | |
| A11Q10 | 1854-1041 | 6 | | TRANSISTOR-NPN | 28480 | |
| A11Q11 | 1855-0125 | 4 | | TRANSISTOR-FET 2SK185 | 28480 | 1855-0125 |
| A11Q12 | 1853-0354 | 7 | | TRANSISTOR PNP SI TO-92 PD=350MW | 28480 | 1853-0354 |
| A11Q13 | 1855-0091 | 3 | | TRANSISTOR J-FET N-CHAN D-MODE SI | 28480 | 1855-0091 |
| A11Q14 | 1855-0125 | 4 | | TRANSISTOR-FET 2SK185 | 28480 | 1855-0125 |
| A11Q15 | 1853-0036 | 2 | | TRANSISTOR PNP SI PD=310MW FT=250MHZ | 28480 | 1853-0036 |

See introduction to this section for ordering information
*Indicates factory selected value

## Table 6-3. Replaceable Parts

| Reference Designation | HP Part Number | C D | Qty | Description | Mfr Code | Mfr Part Number |
|---|---|---|---|---|---|---|
| A11Q16 | 1855-0125 | 4 | | TRANSISTOR-FET 2SK185 | 28480 | 1855-0125 |
| A11Q17 | 1853-0354 | 7 | | TRANSISTOR PNP SI TO-92 PD=350MW | 28480 | 1853-0354 |
| A11Q18 | 1853-0354 | 7 | | TRANSISTOR PNP SI TO-92 PD=350MW | 28480 | 1853-0354 |
| A11Q19 | 1855-0091 | 3 | | TRANSISTOR J-FET N-CHAN D-MODE SI | 28480 | 1855-0091 |
| A11Q20 | 1855-0125 | 4 | | TRANSISTOR-FET 2SK185 | 28480 | 1855-0125 |
| A11Q21 | 1853-0354 | 7 | | TRANSISTOR PNP SI TO-92 PD=350MW | 28480 | 1853-0354 |
| A11Q22 | 1855-0091 | 3 | | TRANSISTOR J-FET N-CHAN D-MODE SI | 28480 | 1855-0091 |
| A11Q23 | 1853-0036 | 2 | | TRANSISTOR PNP SI PD=310MW FT=250MHZ | 28480 | 1853-0036 |
| A11Q24 | 1853-0036 | 2 | | TRANSISTOR PNP SI PD=310MW FT=250MHZ | 28480 | 1853-0036 |
| A11Q25 | 1855-0125 | 4 | | TRANSISTOR-FET 2SK185 | 28480 | 1855-0125 |
| A11Q26 | 1855-0125 | 4 | | TRANSISTOR-FET 2SK185 | 28480 | 1855-0125 |
| A11R1 | 0698-3438 | 3 | | RESISTOR 147 1% .125W F TC=0+-100 | 24546 | C4-1/8-T0-147R-F |
| A11R2 | 0698-3440 | 7 | 7 | RESISTOR 196 1% .125W F TC=0+-100 | 24546 | C4-1/8-T0-196R-F |
| A11R3 | 0757-0442 | 9 | | RESISTOR 10K 1% .125W F TC=0+-100 | 24546 | C4-1/8-T0-1002-F |
| A11R4 | 0757-0199 | 3 | | RESISTOR 21.5K 1% .125W F TC=0+-100 | 24546 | C4-1/8-T0-2152-F |
| A11R5 | 0698-0084 | 9 | | RESISTOR 2.15K 1% .125W F TC=0+-100 | 24546 | C4-1/8-T0-2151-F |
| A11R6 | 0757-0419 | 0 | | RESISTOR 681 1% .125W F TC=0+-100 | 24546 | C4-1/8-T0-681R-F |
| A11R7 | 0757-0419 | 0 | | RESISTOR 681 1% .125W F TC=0+-100 | 24546 | C4-1/8-T0-681R-F |
| A11R8 | 1810-0207 | 9 | 1 | NETWORK-RES 8-SIP22.0K OHM X 7 | 01121 | 208A223 |
| A11R9 | 0757-1094 | 9 | | RESISTOR 1.47K 1% .125W F TC=0+-100 | 24546 | C4-1/8-T0-1471-F |
| A11R10 | 0698-0084 | 9 | | RESISTOR 2.15K 1% .125W F TC=0+-100 | 24546 | C4-1/8-T0-2151-F |
| A11R11 | 0757-0442 | 9 | | RESISTOR 10K 1% .125W F TC=0+-100 | 24546 | C4-1/8-T0-1002-F |
| A11R12 | 0757-0279 | 0 | | RESISTOR 3.16K 1% .125W F TC=0+-100 | 24546 | C4-1/8-T0-3161-F |
| A11R13 | 1810-0231 | 9 | 1 | NETWORK-RES 8-SIP2.2K OHM X 7 | 01121 | 208A222 |
| A11R14 | 0698-0084 | 9 | | RESISTOR 2.15K 1% .125W F TC=0+-100 | 24546 | C4-1/8-T0-2151-F |
| A11R15 | 0757-0401 | 0 | | RESISTOR 100 1% .125W F TC=0+-100 | 24546 | C4-1/8-T0-101-F |
| A11R16 | 0698-6624 | 5 | 8 | RESISTOR 2K .1% .125W F TC=0+-25 | 28480 | 0698-6624 |
| A11R17 | 0698-6624 | 5 | | RESISTOR 2K .1% .125W F TC=0+-25 | 28480 | 0698-6624 |
| A11R18 | 0698-3440 | 7 | | RESISTOR 196 1% .125W F TC=0+-100 | 24546 | C4-1/8-T0-196R-F |
| A11R19 | 0757-0442 | 9 | | RESISTOR 10K 1% .125W F TC=0+-100 | 24546 | C4-1/8-T0-1002-F |
| A11R20 | 0757-0278 | 9 | | RESISTOR 1.78K 1% .125W F TC=0+-100 | 24546 | C4-1/8-T0-1781-F |
| A11R21 | 0757-1094 | 9 | | RESISTOR 1.47K 1% .125W F TC=0+-100 | 24546 | C4-1/8-T0-1471-F |
| A11R22 | 0757-0487 | 2 | 20 | RESISTOR 825K 1% .125W F TC=0+-100 | 28480 | 0757-0487 |
| A11R23 | 0757-0487 | 2 | | RESISTOR 825K 1% .125W F TC=0+-100 | 28480 | 0757-0487 |
| A11R24 | 0698-3161 | 9 | 2 | RESISTOR 38.3K 1% .125W F TC=0+-100 | 24546 | C4-1/8-T0-3832-F |
| A11R25 | 0698-3155 | 1 | | RESISTOR 4.64K 1% .125W F TC=0+-100 | 24546 | C4-1/8-T0-4641-F |
| A11R26 | 0757-0442 | 9 | | RESISTOR 10K 1% .125W F TC=0+-100 | 24546 | C4-1/8-T0-1002-F |
| A11R27 | 0698-3440 | 7 | | RESISTOR 196 1% .125W F TC=0+-100 | 24546 | C4-1/8-T0-196R-F |
| A11R28 | 0698-6362 | 8 | 4 | RESISTOR 1K .1% .125W F TC=0+-25 | 28480 | 0698-6362 |
| A11R29 | 0698-6624 | 5 | | RESISTOR 2K .1% .125W F TC=0+-25 | 28480 | 0698-6624 |
| A11R30 | 0698-6624 | 5 | | RESISTOR 2K .1% .125W F TC=0+-25 | 28480 | 0698-6624 |
| A11R31 | 0698-3440 | 7 | | RESISTOR 196 1% .125W F TC=0+-100 | 24546 | C4-1/8-T0-196R-F |
| A11R32 | 0698-6362 | 8 | | RESISTOR 1K .1% .125W F TC=0+-25 | 28480 | 0698-6362 |
| A11R33 | 0757-0401 | 0 | | RESISTOR 100 1% .125W F TC=0+-100 | 24546 | C4-1/8-T0-101-F |
| A11R34 | 0698-3260 | 9 | | RESISTOR 464K 1% .125W F TC=0+-100 | 28480 | 0698-3260 |
| A11R35 | 0698-3260 | 9 | | RESISTOR 464K 1% .125W F TC=0+-100 | 28480 | 0698-3260 |
| A11R36 | 0757-0487 | 2 | | RESISTOR 825K 1% .125W F TC=0+-100 | 28480 | 0757-0487 |
| A11R37 | 0757-0487 | 2 | | RESISTOR 825K 1% .125W F TC=0+-100 | 28480 | 0757-0487 |
| A11R38 | 0698-3155 | 1 | | RESISTOR 4.64K 1% .125W F TC=0+-100 | 24546 | C4-1/8-T0-4641-F |
| A11R39 | 0698-3155 | 1 | | RESISTOR 4.64K 1% .125W F TC=0+-100 | 24546 | C4-1/8-T0-4641-F |
| A11R40 | 0698-3155 | 1 | | RESISTOR 4.64K 1% .125W F TC=0+-100 | 24546 | C4-1/8-T0-4641-F |
| A11R41 | 0757-0459 | 8 | 2 | RESISTOR 56.2K 1% .125W F TC=0+-100 | 24546 | C4-1/8-T0-5622-F |
| A11R42 | 0698-3160 | 8 | | RESISTOR 31.6K 1% .125W F TC=0+-100 | 24546 | C4-1/8-T0-3162-F |
| A11R43 | 0698-3157 | 3 | | RESISTOR 19.6K 1% .125W F TC=0+-100 | 24546 | C4-1/8-T0-1962-F |
| A11R44 | 0757-0443 | 0 | 2 | RESISTOR 11K 1% .125W F TC=0+-100 | 24546 | C4-1/8-T0-1102-F |
| A11R45 | 2100-0554 | 5 | | RESISTOR-TRMR 500 10% C TOP-ADJ 1-TRN | 28480 | 2100-0554 |
| A11R46 | 2100-0554 | 5 | | RESISTOR-TRMR 500 10% C TOP-ADJ 1-TRN | 28480 | 2100-0554 |
| A11R47 | 0757-0442 | 9 | | RESISTOR 10K 1% .125W F TC=0+-100 | 24546 | C4-1/8-T0-1002-F |
| A11R48 | 0698-8827 | 4 | 3 | RESISTOR 1M 1% .125W F TC=0+-100 | 28480 | 0698-8827 |
| A11R49 | 0698-0084 | 9 | | RESISTOR 2.15K 1% .125W F TC=0+-100 | 24546 | C4-1/8-T0-2151-F |
| A11R50 | 0698-3444 | 1 | | RESISTOR 316 1% .125W F TC=0+-100 | 24546 | C4-1/8-T0-316R-F |
| A11R51 | 0698-3155 | 1 | | RESISTOR 4.64K 1% .125W F TC=0+-100 | 24546 | C4-1/8-T0-4641-F |
| A11R52 | 0757-0199 | 3 | | RESISTOR 21.5K 1% .125W F TC=0+-100 | 24546 | C4-1/8-T0-2152-F |
| A11R53 | 0698-3161 | 9 | | RESISTOR 38.3K 1% .125W F TC=0+-100 | 24546 | C4-1/8-T0-3832-F |
| A11R54 | 0698-3155 | 1 | | RESISTOR 4.64K 1% .125W F TC=0+-100 | 24546 | C4-1/8-T0-4641-F |
| A11R55 | 0757-0279 | 0 | | RESISTOR 3.16K 1% .125W F TC=0+-100 | 24546 | C4-1/8-T0-3161-F |
| A11R56 | 0757-0442 | 9 | | RESISTOR 10K 1% .125W F TC=0+-100 | 24546 | C4-1/8-T0-1002-F |
| A11R57 | 0698-3153 | 9 | | RESISTOR 3.83K 1% .125W F TC=0+-100 | 24546 | C4-1/8-T0-3831-F |
| A11R58 | 0698-0084 | 9 | | RESISTOR 2.15K 1% .125W F TC=0+-100 | 24546 | C4-1/8-T0-2151-F |
| A11R59 | 0757-0442 | 9 | | RESISTOR 10K 1% .125W F TC=0+-100 | 24546 | C4-1/8-T0-1002-F |
| A11R60 | 1810-0205 | 7 | 1 | NETWORK-RES 8-SIP4.7K OHM X 7 | 01121 | 208A472 |
| A11R61 | 0698-0084 | 9 | | RESISTOR 2.15K 1% .125W F TC=0+-100 | 24546 | C4-1/8-T0-2151-F |
| A11R62 | 0698-8827 | 4 | | RESISTOR 1M 1% .125W F TC=0+-100 | 28480 | 0698-8827 |
| A11R63 | 0698-0084 | 9 | | RESISTOR 2.15K 1% .125W F TC=0+-100 | 24546 | C4-1/8-T0-2151-F |
| A11R64 | 0757-0442 | 9 | | RESISTOR 10K 1% .125W F TC=0+-100 | 24546 | C4-1/8-T0-1002-F |
| A11R65 | 0757-0442 | 9 | | RESISTOR 10K 1% .125W F TC=0+-100 | 24546 | C4-1/8-T0-1002-F |

See introduction to this section for ordering information
*Indicates factory selected value

## Table 6-3. Replaceable Parts

| Reference Designation | HP Part Number | C D | Qty | Description | Mfr Code | Mfr Part Number |
|---|---|---|---|---|---|---|
| A11R66 | 0757-0442 | 9 | | RESISTOR 10K 1% .125W F TC=0+-100 | 24546 | C4-1/8-T0-1002-F |
| A11R67 | 2100-3383 | 5 | 1 | RESISTOR-TRMR 50 10% C TOP-ADJ 1-TRN | | |
| A11R68 | 0698-3155 | 1 | | RESISTOR 4.64K 1% .125W F TC=0+-100 | 24546 | C4-1/8-T0-4641-F |
| A11R69 | 0757-0459 | 8 | | RESISTOR 56.2K 1% .125W F TC=0+-100 | 24546 | C4-1/8-T0-5622-F |
| A11R70 | 0698-3160 | 8 | | RESISTOR 31.6K 1% .125W F TC=0+-100 | 24546 | C4-1/8-T0-3162-F |
| A11R71 | 0698-3157 | 3 | | RESISTOR 19.6K 1% .125W F TC=0+-100 | 24546 | C4-1/8-T0-1962-F |
| A11R72 | 0757-0443 | 0 | | RESISTOR 11K 1% .125W F TC=0+-100 | 24546 | C4-1/8-T0-1102-F |
| A11R73 | 0757-0442 | 9 | | RESISTOR 10K 1% .125W F TC=0+-100 | 24546 | C4-1/8-T0-1002-F |
| A11R74 | 0683-2255 | 9 | 3 | RESISTOR 2.2M 5% .25W FC TC=-900/+1100 | 01121 | CB2255 |
| A11R75 | 0757-0487 | 2 | | RESISTOR 825K 1% .125W F TC=0+-100 | 28480 | 0757-0487 |
| A11R76 | 0757-0487 | 2 | | RESISTOR 825K 1% .125W F TC=0+-100 | 28480 | 0757-0487 |
| A11R77 | 0757-0487 | 2 | | RESISTOR 825K 1% .125W F TC=0+-100 | 28480 | 0757-0487 |
| A11R78 | 0757-0487 | 2 | | RESISTOR 825K 1% .125W F TC=0+-100 | 28480 | 0757-0487 |
| A11R79 | 0698-3444 | 1 | | RESISTOR 316 1% .125W F TC=0+-100 | 24546 | C4-1/8-T0-316R-F |
| A11R80 | 0699-0535 | 7 | 3 | RESISTOR-FXD 330 OHM 0.1% | 28480 | 0699-0535 |
| A11R81 | 2100-3345 | 8 | 3 | RESISTOR-TRMR 10 10% C TOP-ADJ 1-TRN | 28480 | 2100-3345 |
| A11R82 | 0698-2297 | 0 | 3 | RESISTOR-FXD 3.01K OHM .05% | 28480 | 0698-2297 |
| A11R83 | 0698-0084 | 9 | | RESISTOR 2.15K 1% .125W F TC=0+-100 | 24546 | C4-1/8-T0-2151-F |
| A11R84 | 0757-0401 | 0 | | RESISTOR 100 1% .125W F TC=0+-100 | 24546 | C4-1/8-T0-101-F |
| A11R85 | 0698-6624 | 5 | | RESISTOR 2K .1% .125W F TC=0+-25 | 28480 | 0698-6624 |
| A11R86 | 0698-6624 | 5 | | RESISTOR 2K .1% .125W F TC=0+-25 | 28480 | 0698-6624 |
| A11R87 | 0698-3440 | 7 | | RESISTOR 196 1% .125W F TC=0+-100 | 24546 | C4-1/8-T0-196R-F |
| A11R88 | 0757-0442 | 9 | | RESISTOR 10K 1% .125W F TC=0+-100 | 24546 | C4-1/8-T0-1002-F |
| A11R89 | 0757-0278 | 9 | | RESISTOR 1.78K 1% .125W F TC=0+-100 | 24546 | C4-1/8-T0-1781-F |
| A11R90 | 0757-1094 | 9 | | RESISTOR 1.47K 1% .125W F TC=0+-100 | 24546 | C4-1/8-T0-1471-F |
| A11R91 | 0698-3444 | 1 | | RESISTOR 316 1% .125W F TC=0+-100 | 24546 | C4-1/8-T0-316R-F |
| A11R92 | 0698-3438 | 3 | | RESISTOR 147 1% .125W F TC=0+-100 | 24546 | C4-1/8-T0-147R-F |
| A11R93 | 0698-3438 | 3 | | RESISTOR 147 1% .125W F TC=0+-100 | 24546 | C4-1/8-T0-147R-F |
| A11R94 | 0757-0487 | 2 | | RESISTOR 825K 1% .125W F TC=0+-100 | 28480 | 0757-0487 |
| A11R95 | 0757-0487 | 2 | | RESISTOR 825K 1% .125W F TC=0+-100 | 28480 | 0757-0487 |
| A11R96 | 0757-0442 | 9 | | RESISTOR 10K 1% .125W F TC=0+-100 | 24546 | C4-1/8-T0-1002-F |
| A11R97 | 0757-0438 | 3 | 1 | RESISTOR 5.11K 1% .125W F TC=0+-100 | 24546 | C4-1/8-T0-5111-F |
| A11R98 | 0698-3444 | 1 | | RESISTOR 316 1% .125W F TC=0+-100 | 24546 | C4-1/8-T0-316R-F |
| A11R99 | 0698-3438 | 3 | | RESISTOR 147 1% .125W F TC=0+-100 | 24546 | C4-1/8-T0-147R-F |
| A11R100 | 2100-3345 | 8 | | RESISTOR-TRMR 10 10% C TOP-ADJ 1-TRN | 28480 | 2100-3345 |
| A11R101 | 0698-2297 | 0 | | RESISTOR-FXD 3.01K OHM .05% | 28480 | 0698-2297 |
| A11R102 | 0683-2255 | 9 | | RESISTOR 2.2M 5% .25W FC TC=-900/+1100 | 01121 | CB2255 |
| A11R103 | 0698-0084 | 9 | | RESISTOR 2.15K 1% .125W F TC=0+-100 | 24546 | C4-1/8-T0-2151-F |
| A11R104 | 0757-0199 | 3 | | RESISTOR 21.5K 1% .125W F TC=0+-100 | 24546 | C4-1/8-T0-2152-F |
| A11R105 | 2100-3345 | 8 | | RESISTOR-TRMR 10 10% C TOP-ADJ 1-TRN | 28480 | 2100-3345 |
| A11R106 | 0699-0535 | 7 | | RESISTOR-FXD 330 OHM 0.1% | 28480 | 0699-0535 |
| A11R107 | 0683-2255 | 9 | | RESISTOR 2.2M 5% .25W FC TC=-900/+1100 | 01121 | CB2255 |
| A11R108 | 0698-0084 | 9 | | RESISTOR 2.15K 1% .125W F TC=0+-100 | 24546 | C4-1/8-T0-2151-F |
| A11R109 | 0757-0199 | 3 | | RESISTOR 21.5K 1% .125W F TC=0+-100 | 24546 | C4-1/8-T0-2152-F |
| A11R110 | 0698-3440 | 7 | | RESISTOR 196 1% .125W F TC=0+-100 | 24546 | C4-1/8-T0-196R-F |
| A11R111 | 0757-0401 | 0 | | RESISTOR 100 1% .125W F TC=0+-100 | 24546 | C4-1/8-T0-101-F |
| A11R112 | 0698-3260 | 9 | | RESISTOR 464K 1% .125W F TC=0+-100 | 28480 | 0698-3260 |
| A11R113 | 0698-3260 | 9 | | RESISTOR 464K 1% .125W F TC=0+-100 | 28480 | 0698-3260 |
| A11R114 | 0757-0487 | 2 | | RESISTOR 825K 1% .125W F TC=0+-100 | 28480 | 0757-0487 |
| A11R115 | 0757-0487 | 2 | | RESISTOR 825K 1% .125W F TC=0+-100 | 28480 | 0757-0487 |
| A11R116 | 0698-3155 | 1 | | RESISTOR 4.64K 1% .125W F TC=0+-100 | 24546 | C4-1/8-T0-4641-F |
| A11R117 | 0698-3260 | 9 | | RESISTOR 464K 1% .125W F TC=0+-100 | 28480 | 0698-3260 |
| A11R118 | 0698-7962 | 6 | 1 | RESISTOR 976K 1% .125W F TC=0+-100 | 07716 | CEA-1/8-T0-9763-F |
| A11R119 | 2100-3253 | 7 | 1 | RESISTOR-TRMR 50K 10% C TOP-ADJ 1-TRN | 28480 | 2100-3253 |
| A11R120 | 0698-6362 | 8 | | RESISTOR 1K .1% .125W F TC=0+-25 | 28480 | 0698-6362 |
| A11R121 | 0698-6624 | 5 | | RESISTOR 2K .1% .125W F TC=0+-25 | 28480 | 0698-6624 |
| A11R122 | 0698-6624 | 5 | | RESISTOR 2K .1% .125W F TC=0+-25 | 28480 | 0698-6624 |
| A11R123 | 0698-3440 | 7 | | RESISTOR 196 1% .125W F TC=0+-100 | 24546 | C4-1/8-T0-196R-F |
| A11R124 | 0698-6362 | 8 | | RESISTOR 1K .1% .125W F TC=0+-25 | 28480 | 0698-6362 |
| A11R125 | 0698-0084 | 9 | | RESISTOR 2.15K 1% .125W F TC=0+-100 | 24546 | C4-1/8-T0-2151-F |
| A11R126 | 0698-3444 | 1 | | RESISTOR 316 1% .125W F TC=0+-100 | 24546 | C4-1/8-T0-316R-F |
| A11R127 | 0698-3444 | 1 | | RESISTOR 316 1% .125W F TC=0+-100 | 24546 | C4-1/8-T0-316R-F |
| A11R128 | 0757-0421 | 4 | | RESISTOR 825 1% .125W F TC=0+-100 | 24546 | C4-1/8-T0-825R-F |
| A11R129 | 0698-3444 | 1 | | RESISTOR 316 1% .125W F TC=0+-100 | 24546 | C4-1/8-T0-316R-F |
| A11R130 | 0698-3438 | 3 | | RESISTOR 147 1% .125W F TC=0+-100 | 24546 | C4-1/8-T0-147R-F |
| A11R131 | 0757-0280 | 3 | | RESISTOR 1K 1% .125W F TC=0+-100 | 24546 | C4-1/8-T0-1001-F |
| A11R132 | 0699-0535 | 7 | | RESISTOR-FXD 330 OHM 0.1% | 28480 | 0699-0535 |
| A11R133 | 0757-0487 | 2 | | RESISTOR 825K 1% .125W F TC=0+-100 | 28480 | 0757-0487 |
| A11R134 | 0757-0487 | 2 | | RESISTOR 825K 1% .125W F TC=0+-100 | 28480 | 0757-0487 |
| A11R135 | 0757-0487 | 2 | | RESISTOR 825K 1% .125W F TC=0+-100 | 28480 | 0757-0487 |
| A11R136 | 0757-0487 | 2 | | RESISTOR 825K 1% .125W F TC=0+-100 | 28480 | 0757-0487 |
| A11R137 | 0698-2297 | 0 | | RESISTOR-FXD 3.01K OHM .05% | 28480 | 0698-2297 |
| A11R138 | 0757-0487 | 2 | | RESISTOR 825K 1% .125W F TC=0+-100 | 28480 | 0757-0487 |
| A11R139 | 0757-0487 | 2 | | RESISTOR 825K 1% .125W F TC=0+-100 | 28480 | 0757-0487 |
| A11R140 | 0757-0487 | 2 | | RESISTOR 825K 1% .125W F TC=0+-100 | 28480 | 0757-0487 |

See introduction to this section for ordering information
*Indicates factory selected value

## Table 6-3. Replaceable Parts

| Reference Designation | HP Part Number | C D | Qty | Description | Mfr Code | Mfr Part Number |
|---|---|---|---|---|---|---|
| A11R141 | 0757-0487 | 2 | | RESISTOR 825K 1% .125W F TC=0+-100 | 28480 | 0757-0487 |
| A11R142 | 0698-0084 | 9 | | RESISTOR 2.15K 1% .125W F TC=0+-100 | 24546 | C4-1/8-T0-2151-F |
| A11R143 | 0698-8827 | 4 | | RESISTOR 1M 1% .125W F TC=0+-100 | 28480 | 0698-8827 |
| A11R144 | 0698-0084 | 9 | | RESISTOR 2.15K 1% .125W F TC=0+-100 | 24546 | C4-1/8-T0-2151-F |
| A11R145 | 0757-0442 | 9 | | RESISTOR 10K 1% .125W F TC=0+-100 | 24546 | C4-1/8-T0-1002-F |
| A11R146 | 0757-0442 | 9 | | RESISTOR 10K 1% .125W F TC=0+-100 | 24546 | C4-1/8-T0-1002-F |
| A11R147 | 0757-0442 | 9 | | RESISTOR 10K 1% .125W F TC=0+-100 | 24546 | C4-1/8-T0-1002-F |
| A11R148 | 1810-0301 | 4 | | NETWORK-RES 16-DIP51.0 OHM X 8 | 01121 | 316B510 |
| A11R148 | 0757-0280 | | | RESISTOR 1K | | |
| | 0757-0280 | | | RESISTOR 1K | | |
| A11S1 | 3101-1856 | 5 | | SWITCH-SL 8-1A DIP-SLIDE-ASSY .1A 50VDC | 28480 | 3101-1856 |
| A11U1 | 1826-0138 | 8 | | IC COMPARATOR GP QUAD 14-DIP-P PKG | 01295 | LM339N |
| A11U2 | 1820-1433 | 6 | | IC SHF-RGTR TTL LS R-S SERIAL-IN PRL-OUT | 01295 | SN74LS164N |
| A11U3 | 1826-0138 | 8 | | IC COMPARATOR GP QUAD 14-DIP-P PKG | 01295 | LM339N |
| A11U4 | 1826-0275 | 4 | | IC V RGLTR TO-92 | | µA78L12ACP |
| A11U5 | 1826-0089 | 8 | 7 | IC OP AMP WB TO-99 PKG | 29832 | 1322 |
| A11U6 | 1826-0502 | 0 | | IC SWITCH ANLG QUAD 14-DIP-P PKG | 04713 | MC14066BCP |
| A11U7 | 1826-0089 | 8 | | IC OP AMP WB TO-99 PKG | 29832 | 1322 |
| A11U8 | 1826-0043 | 4 | | IC OP AMP GP TO-99 PKG | 0192B | CA307T |
| A11U9 | 1826-0035 | 4 | | IC OP AMP LOW-DRIFT TO-99 PKG | 27014 | LM308AH |
| A11U10 | 1826-0282 | 3 | | IC V RGLTR TO-92 | 04713 | MC79L12ACP |
| A11U11 | 1826-0089 | 8 | | IC OP AMP WB TO-99 PKG | 29832 | 1322 |
| A11U12 | 1826-0502 | 0 | | IC SWITCH ANLG QUAD 14-DIP-P PKG | 04713 | MC14066BCP |
| A11U13 | 1826-0089 | 8 | | IC OP AMP WB TO-99 PKG | 29832 | 1322 |
| A11U14 | 1826-0089 | 8 | | IC OP AMP WB TO-99 PKG | 29832 | 1322 |
| A11U15 | 1826-0275 | 4 | | IC V RGLTR TO-92 | | µA78L12ACP |
| A11U16 | 1821-0001 | 4 | | TRANSISTOR ARRAY 14-PIN PLSTC DIP | 0192B | CA3046 |
| A11U17 | 5080-3077 | 8 | | IC OP AMP HA 2525 SEL | | |
| A11U18 | 5080-3077 | 8 | | IC OP AMP HA 2525 SEL | | |
| A11U19 | 1826-0043 | 4 | | IC OP AMP GP TO-99 PKG | 0192B | CA307T |
| A11U20 | 1826-0035 | 4 | | IC OP AMP LOW-DRIFT TO-99 PKG | 27014 | LM308AH |
| A11U21 | 1826-0282 | 3 | | IC V RGLTR TO-92 | 04713 | MC79L12ACP |
| A11U22 | 1826-0138 | 8 | | IC COMPARATOR GP QUAD 14-DIP-P PKG | 01295 | LM339N |
| A11W1 | 1251-4787 | 2 | | SHUNT-DIP 8-POSITION | 28480 | 1251-4787 |
| | 0340-0060 | 4 | 4 | TERMINAL-STUD SPCL-FDTHRU PRESS-MTG | 98291 | 011-6809 000 209 |
| | 0340-0220 | 8 | | BEADS | 28480 | 0340-0220 |
| | 1258-0141 | 8 | | JUMPER-REM | 28480 | 1258-0141 |
| | 3050-0082 | 8 | | WASHER-FL NM NO. 4 .116-IN-ID .188-IN-OD | 28480 | 3050-0082 |
| | 3050-0082 | 8 | | WASHER-FL NM NO. 4 .116-IN-ID .188-IN-OD | 28480 | 3050-0082 |
| | 9170-0029 | 3 | | CORE-SHIELDING BEAD | 28480 | 9170-0029 |
| A12 | 04192-66512 | 2 | 1 | MODULATOR BOARD ASSEMBLY (NOT INCLUDING THE SHIELD CASES) | 28480 | 04192-66512 |
| A12C1 | 0180-1085 | 5 | | CAPACITOR-FXD 4.7UF 16VDC TA | 28480 | 0180-1085 |
| A12C2 | 0160-3456 | 6 | | CAPACITOR-FXD 1000PF +-10% 1KVDC CER | 28480 | 0160-3456 |
| A12C3 | 0160-0127 | 2 | | CAPACITOR-FXD 1UF +-20% 25VDC CER | 28480 | 0160-0127 |
| A12C4 | 0160-4835 | 8 | | CAPACITOR-FXD .1UF 10% 50VDC CER | | |
| A12C5 | 0160-2204 | 0 | | CAPACITOR-FXD 100PF +-5% 300VDC MICA | 28480 | 0160-2204 |
| A12C6 | 0160-3847 | 9 | | CAPACITOR-FXD .01UF +100-0% 50VDC CER | 28480 | 0160-3847 |
| A12C7 | 0160-3456 | 6 | | CAPACITOR-FXD 1000PF +-10% 1KVDC CER | 28480 | 0160-3456 |
| A12C8 | 0160-3456 | 6 | | CAPACITOR-FXD 1000PF +-10% 1KVDC CER | 28480 | 0160-3456 |
| A12C9 | 0160-3456 | 6 | | CAPACITOR-FXD 1000PF +-10% 1KVDC CER | 28480 | 0160-3456 |
| A12C10 | 0160-3456 | 6 | | CAPACITOR-FXD 1000PF +-10% 1KVDC CER | 28480 | 0160-3456 |
| A12C11 | 0160-3456 | 6 | | CAPACITOR-FXD 1000PF +-10% 1KVDC CER | 28480 | 0160-3456 |
| A12C12 | 0160-3847 | 9 | | CAPACITOR-FXD .01UF +100-0% 50VDC CER | 28480 | 0160-3847 |
| A12C13 | 0160-3466 | 8 | | CAPACITOR-FXD 100PF +-10% 1KVDC CER | 28480 | 0160-3466 |
| A12C14 | 0160-3466 | 8 | | CAPACITOR-FXD 100PF +-10% 1KVDC CER | 28480 | 0160-3466 |
| A12C15 | 0180-1085 | 5 | | CAPACITOR-FXD 4.7UF 16VDC TA | 28480 | 0180-1085 |
| A12C16 | 0160-3847 | 9 | | CAPACITOR-FXD .01UF +100-0% 50VDC CER | 28480 | 0160-3847 |
| A12C17 | 0160-3466 | 8 | | CAPACITOR-FXD 100PF +-10% 1KVDC CER | 28480 | 0160-3466 |
| A12C18 | 0160-3466 | 8 | | CAPACITOR-FXD 100PF +-10% 1KVDC CER | 28480 | 0160-3466 |
| A12C19 | 0140-0210 | 2 | | CAPACITOR-FXD 270PF +-5% 300VDC MICA | 72136 | DM15F271J0300WV1CR |
| A12C20 | 0140-0210 | 2 | | CAPACITOR-FXD 270PF +-5% 300VDC MICA | 72136 | DM15F271J0300WV1CR |
| A12C21 | 0160-3456 | 6 | | CAPACITOR-FXD 1000PF +-10% 1KVDC CER | 28480 | 0160-3456 |
| A12C22 | 0160-3847 | 9 | | CAPACITOR-FXD .01UF +100-0% 50VDC CER | 28480 | 0160-3847 |
| A12C23 | 0160-3847 | 9 | | CAPACITOR-FXD .01UF +100-0% 50VDC CER | 28480 | 0160-3847 |
| A12C24 | 0180-1085 | 5 | | CAPACITOR-FXD 4.7UF 16VDC TA | 28480 | 0180-1085 |
| A12C25 | 0160-3847 | 9 | | CAPACITOR-FXD .01UF +100-0% 50VDC CER | 28480 | 0160-3847 |
| A12C27 | 0180-1085 | 5 | | CAPACITOR-FXD 4.7UF 16VDC TA | 28480 | 0180-1085 |
| A12C28 | 0160-3847 | 9 | | CAPACITOR-FXD .01UF +100-0% 50VDC CER | 28480 | 0160-3847 |
| A12C29 | 0140-0192 | 9 | 6 | CAPACITOR-FXD 68PF +-5% 300VDC MICA | 72136 | DM15E680J0300WV1CR |
| A12C30 | 0160-2207 | 3 | 3 | CAPACITOR-FXD 300PF +-5% 300VDC MICA | 28480 | 0160-2207 |
| A12C31 | 0140-0210 | 2 | | CAPACITOR-FXD 270PF +-5% 300VDC MICA | 72136 | DM15F271J0300WV1CR |
| A12C32 | 0160-2207 | 3 | | CAPACITOR-FXD 300PF +-5% 300VDC MICA | 28480 | 0160-2207 |
| A12C33 | 0160-3456 | 6 | | CAPACITOR-FXD 1000PF +-10% 1KVDC CER | 28480 | 0160-3456 |
| A12C34 | 0160-3456 | 6 | | CAPACITOR-FXD 1000PF +-10% 1KVDC CER | 28480 | 0160-3456 |
| A12C35 | 0160-3847 | 9 | | CAPACITOR-FXD .01UF +100-0% 50VDC CER | 28480 | 0160-3847 |
| A12C36 | 0160-3456 | 6 | | CAPACITOR-FXD 1000PF +-10% 1KVDC CER | 28480 | 0160-3456 |

See introduction to this section for ordering information
*Indicates factory selected value

## Table 6-3. Replaceable Parts

| Reference Designation | HP Part Number | C D | Qty | Description | Mfr Code | Mfr Part Number |
|---|---|---|---|---|---|---|
| A12C37 | 0140-0192 | 9 | | CAPACITOR-FXD 68PF +-5% 300VDC MICA | 72136 | DM15E680J0300WV1CR |
| A12C38 | 0140-0192 | 9 | | CAPACITOR-FXD 68PF +-5% 300VDC MICA | 72136 | DM15E680J0300WV1CR |
| A12C39 | 0160-2307 | 4 | | CAPACITOR-FXD 47PF +-5% 300VDC MICA | 28480 | 0160-2307 |
| A12C40 | 0160-3847 | 9 | | CAPACITOR-FXD .01UF +100-0% 50VDC CER | 28480 | 0160-3847 |
| A12C41 | 0160-3456 | 6 | | CAPACITOR-FXD 1000PF +-10% 1KVDC CER | 28480 | 0160-3456 |
| A12C42 | 0160-3847 | 9 | | CAPACITOR-FXD .01UF +100-0% 50VDC CER | 28480 | 0160-3847 |
| A12C43 | 0180-1085 | 5 | | CAPACITOR-FXD 4.7UF 16VDC TA | 28480 | 0180-1085 |
| A12C44 | 0180-1085 | 5 | | CAPACITOR-FXD 4.7UF 16VDC TA | 28480 | 0180-1085 |
| A12C45 | 0140-0210 | 2 | | CAPACITOR-FXD 270PF +-5% 300VDC MICA | 72136 | DM15F271J0300WV1CR |
| A12C46 | 0140-0192 | 9 | | CAPACITOR-FXD 68PF +-5% 300VDC MICA | 72136 | DM15E680J0300WV1CR |
| A12C47 | 0160-3456 | 6 | | CAPACITOR-FXD 1000PF +-10% 1KVDC CER | 28480 | 0160-3456 |
| A12C48 | 0160-3456 | 6 | | CAPACITOR-FXD 1000PF +-10% 1KVDC CER | 28480 | 0160-3456 |
| A12C49 | 0160-3847 | 9 | | CAPACITOR-FXD .01UF +100-0% 50VDC CER | 28480 | 0160-3847 |
| A12C50 | 0160-2940 | 1 | | CAPACITOR-FXD 470PF +-5% 300VDC MICA | 28480 | 0160-2940 |
| A12C51 | 0160-3456 | 6 | | CAPACITOR-FXD 1000PF +-10% 1KVDC CER | 28480 | 0160-3456 |
| A12C52 | 0140-0210 | 2 | | CAPACITOR-FXD 270PF +-5% 300VDC MICA | 72136 | DM15F271J0300WV1CR |
| A12C53 | 0140-0210 | 2 | | CAPACITOR-FXD 270PF +-5% 300VDC MICA | 72136 | DM15F271J0300WV1CR |
| A12C54 | 0160-3847 | 9 | | CAPACITOR-FXD .01UF +100-0% 50VDC CER | 28480 | 0160-3847 |
| A12C55 | 0160-2307 | 4 | | CAPACITOR-FXD 47PF +-5% 300VDC MICA | 28480 | 0160-2307 |
| A12C56 | 0180-1085 | 5 | | CAPACITOR-FXD 4.7UF 16VDC TA | 28480 | 0180-1085 |
| A12C57 | 0140-0210 | 2 | | CAPACITOR-FXD 270PF +-5% 300VDC MICA | 72136 | DM15F271J0300WV1CR |
| A12C58 | 0160-3456 | 6 | | CAPACITOR-FXD 1000PF +-10% 1KVDC CER | 28480 | 0160-3456 |
| A12C59 | 0160-3847 | 9 | | CAPACITOR-FXD .01UF +100-0% 50VDC CER | 28480 | 0160-3847 |
| A12C60 | 0160-3847 | 9 | | CAPACITOR-FXD .01UF +100-0% 50VDC CER | 28480 | 0160-3847 |
| A12C61 | 0160-3847 | 9 | | CAPACITOR-FXD .01UF +100-0% 50VDC CER | 28480 | 0160-3847 |
| A12C62 | 0160-4835 | 8 | | CAPACITOR-FXD .1UF 10% 50VDC CER | | |
| A12C63 | 0160-2307 | 4 | | CAPACITOR-FXD 47PF +-5% 300VDC MICA | 28480 | 0160-2307 |
| A12C64 | 0160-3456 | 6 | | CAPACITOR-FXD 1000PF +-10% 1KVDC CER | 28480 | 0160-3456 |
| A12C65 | 0140-0192 | 9 | | CAPACITOR-FXD 68PF +-5% 300VDC MICA | 72136 | DM15E680J0300WV1CR |
| A12C66 | 0140-0192 | 9 | | CAPACITOR-FXD 68PF +-5% 300VDC MICA | 72136 | DM15E680J0300WV1CR |
| A12C67 | 0160-2207 | 3 | | CAPACITOR-FXD 300PF +-5% 300VDC MICA | 28480 | 0160-2207 |
| A12C68 | 0160-3456 | 6 | | CAPACITOR-FXD 1000PF +-10% 1KVDC CER | 28480 | 0160-3456 |
| A12C69 | 0160-3847 | 9 | | CAPACITOR-FXD .01UF +100-0% 50VDC CER | 28480 | 0160-3847 |
| A12C70 | 0160-3466 | 8 | | CAPACITOR-FXD 100PF +-10% 1KVDC CER | 28480 | 0160-3466 |
| A12C71 | 0160-3466 | 8 | | CAPACITOR-FXD 100PF +-10% 1KVDC CER | 28480 | 0160-3466 |
| A12C72 | 0160-3847 | 9 | | CAPACITOR-FXD .01UF +100-0% 50VDC CER | 28480 | 0160-3847 |
| A12C73 | 0180-1085 | 5 | | CAPACITOR-FXD 4.7UF 16VDC TA | 28480 | 0180-1085 |
| A12C74 | 0140-0210 | 2 | | CAPACITOR-FXD 270PF +-5% 300VDC MICA | 72136 | DM15F271J0300WV1CR |
| A12C75 | 0160-3456 | 6 | | CAPACITOR-FXD 1000PF +-10% 1KVDC CER | 28480 | 0160-3456 |
| A12C76 | 0160-3847 | 9 | | CAPACITOR-FXD .01UF +100-0% 50VDC CER | 28480 | 0160-3847 |
| A12C77 | 0160-0127 | 2 | | CAPACITOR-FXD 1UF +-20% 25VDC CER | 28480 | 0160-0127 |
| A12C78 | 0160-4835 | 8 | | CAPACITOR-FXD .1UF 10% 50VDC CER | | |
| A12C79 | 0160-3847 | 9 | | CAPACITOR-FXD .01UF +100-0% 50VDC CER | 28480 | 0160-3847 |
| A12C80 | 0180-1085 | 5 | | CAPACITOR-FXD 4.7UF 16VDC TA | 28480 | 0180-1085 |
| A12C81 | 0140-0210 | 2 | | CAPACITOR-FXD 270PF +-5% 300VDC MICA | 72136 | DM15F271J0300WV1CR |
| A12C82 | 0160-2204 | 0 | | CAPACITOR-FXD 100PF +-5% 300VDC MICA | 28480 | 0160-2204 |
| A12C83 | 0160-2204 | 0 | | CAPACITOR-FXD 100PF +-5% 300VDC MICA | 28480 | 0160-2204 |
| A12C84 | 0160-2940 | 1 | | CAPACITOR-FXD 470PF +-5% 300VDC MICA | 28480 | 0160-2940 |
| A12C85 | 0160-3456 | 6 | | CAPACITOR-FXD 1000PF +-10% 1KVDC CER | 28480 | 0160-3456 |
| A12C86 | 0160-2204 | 0 | | CAPACITOR-FXD 100PF +-5% 300VDC MICA | 28480 | 0160-2204 |
| A12C87 | 0160-0127 | 2 | | CAPACITOR-FXD 1UF +-20% 25VDC CER | 28480 | 0160-0127 |
| A12C88 | 0160-4835 | 8 | | CAPACITOR-FXD .1UF 10% 50VDC CER | | |
| A12C89 | 0160-3456 | 6 | | CAPACITOR-FXD 1000PF +-10% 1KVDC CER | 28480 | 0160-3456 |
| A12C90 | 0160-3456 | 6 | | CAPACITOR-FXD 1000PF +-10% 1KVDC CER | 28480 | 0160-3456 |
| A12C91 | 0160-3456 | 6 | | CAPACITOR-FXD 1000PF +-10% 1KVDC CER | 28480 | 0160-3456 |
| A12C92 | 0160-3456 | 6 | | CAPACITOR-FXD 1000PF +-10% 1KVDC CER | 28480 | 0160-3456 |
| A12C93 | 0160-2257 | 3 | | CAPACITOR-FXD 10PF +-5% 500VDC CER 0+-60 | 28480 | 0160-2257 |
| A12C94 | 0160-4835 | 8 | | CAPACITOR-FXD .1UF 10% 50VDC CER | | |
| A12C95 | 0160-3847 | 9 | | CAPACITOR-FXD .01UF +100-0% 50VDC CER | 28480 | 0160-3847 |
| A12CR1 | 1901-0518 | 8 | | DIODE-SM SIG SCHOTTKY | 28480 | 1901-0518 |
| A12CR2 | 1901-0518 | 8 | | DIODE-SM SIG SCHOTTKY | 28480 | 1901-0518 |
| A12CR3 | 1901-0639 | 4 | 9 | DIODE-PIN | 28480 | 5082-3080 |
| A12CR4 | 1901-0639 | 4 | | DIODE-PIN | 28480 | 5082-3080 |
| A12CR5 | 1901-0639 | 4 | | DIODE-PIN | 28480 | 5082-3080 |
| A12CR6 | 1901-0639 | 4 | | DIODE-PIN | 28480 | 5082-3080 |
| A12CR7 | 1901-0639 | 4 | | DIODE-PIN | 28480 | 5082-3080 |
| A12CR8 | 1901-0639 | 4 | | DIODE-PIN | 28480 | 5082-3080 |
| A12CR9 | 1901-0639 | 4 | | DIODE-PIN | 28480 | 5082-3080 |
| A12CR10 | 1901-0639 | 4 | | DIODE-PIN | 28480 | 5082-3080 |
| A12CR11 | 1901-0639 | 4 | | DIODE-PIN | 28480 | 5082-3080 |
| A12E1 | 1906-0235 | 6 | 3 | DIODE | 28480 | 1906-0235 |
| A12E2 | 1906-0235 | 6 | | DIODE | 28480 | 1906-0235 |
| A12E3 | 1906-0235 | 6 | | DIODE | 28480 | 1906-0235 |

See introduction to this section for ordering information
*Indicates factory selected value

## Table 6-3. Replaceable Parts

| Reference Designation | HP Part Number | C D | Qty | Description | Mfr Code | Mfr Part Number |
|---|---|---|---|---|---|---|
| A12J1 | 1250-0257 | 1 | | CONNECTOR-RF SMB M PC 50-OHM | 28480 | 1250-0257 |
| A12J2 | 1250-0257 | 1 | | CONNECTOR-RF SMB M PC 50-OHM | 28480 | 1250-0257 |
| A12J3 | 1250-0257 | 1 | | CONNECTOR-RF SMB M PC 50-OHM | 28480 | 1250-0257 |
| A12J4 | 1250-0257 | 1 | | CONNECTOR-RF SMB M PC 50-OHM | 28480 | 1250-0257 |
| A12J5 | 1250-0257 | 1 | | CONNECTOR-RF SMB M PC 50-OHM | 28480 | 1250-0257 |
| A12J6 | 1250-0257 | 1 | | CONNECTOR-RF SMB M PC 50-OHM | 28480 | 1250-0257 |
| A12J7 | 1250-0257 | 1 | | CONNECTOR-RF SMB M PC 50-OHM | 28480 | 1250-0257 |
| A12J8 | 1250-0257 | 1 | | CONNECTOR-RF SMB M PC 50-OHM | 28480 | 1250-0257 |
| A12J9 | 1250-0257 | 1 | | CONNECTOR-RF SMB M PC 50-OHM | 28480 | 1250-0257 |
| A12J10 | 1250-0257 | 1 | | CONNECTOR-RF SMB M PC 50-OHM | 28480 | 1250-0257 |
| A12J11 | 1200-0607 | 0 | | SOCKET-IC 16-CONT DIP DIP-SLDR | 28480 | 1200-0607 |
| A12J12 | 1250-0257 | 1 | | CONNECTOR-RF SMB M PC 50-OHM | 28480 | 1250-0257 |
| A12L1 | 9140-0114 | 4 | | INDUCTOR RF-CH-MLD 10UH 10% .166DX.385LG | 28480 | 9140-0114 |
| A12L2 | 9140-0114 | 4 | | INDUCTOR RF-CH-MLD 10UH 10% .166DX.385LG | 28480 | 9140-0114 |
| A12L3 | 9140-0114 | 4 | | INDUCTOR RF-CH-MLD 10UH 10% .166DX.385LG | 28480 | 9140-0114 |
| A12L4 | 9100-2259 | 8 | 5 | INDUCTOR RF-CH-MLD 1.5UH 10% .105DX.26LG | 28480 | 9100-2259 |
| A12L5 | 9100-2259 | 8 | | INDUCTOR RF-CH-MLD 1.5UH 10% .105DX.26LG | 28480 | 9100-2259 |
| A12L6 | 9140-0114 | 4 | | INDUCTOR RF-CH-MLD 10UH 10% .166DX.385LG | 28480 | 9140-0114 |
| A12L7 | 9100-2259 | 8 | | INDUCTOR RF-CH-MLD 1.5UH 10% .105DX.26LG | 28480 | 9100-2259 |
| A12L8 | 9140-0141 | 7 | 6 | INDUCTOR RF-CH-MLD 680NH 10% .105DX.26LG | 28480 | 9140-0141 |
| A12L9 | 9140-0158 | 6 | | INDUCTOR RF-CH-MLD 1UH 10% .105DX.26LG | 28480 | 9140-0158 |
| A12L10 | 9100-2259 | 8 | | INDUCTOR RF-CH-MLD 1.5UH 10% .105DX.26LG | 28480 | 9100-2259 |
| A12L11 | 9140-0141 | 7 | | INDUCTOR RF-CH-MLD 680NH 10% .105DX.26LG | 28480 | 9140-0141 |
| A12L12 | 9100-2258 | 7 | 6 | INDUCTOR RF-CH-MLD 1.2UH 10% .105DX.26LG | 28480 | 9100-2258 |
| A12L13 | 9100-2258 | 7 | | INDUCTOR RF-CH-MLD 1.2UH 10% .105DX.26LG | 28480 | 9100-2258 |
| A12L14 | 9140-0141 | 7 | | INDUCTOR RF-CH-MLD 680NH 10% .105DX.26LG | 28480 | 9140-0141 |
| A12L15 | 9100-2258 | 7 | | INDUCTOR RF-CH-MLD 1.2UH 10% .105DX.26LG | 28480 | 9100-2258 |
| A12L16 | 9140-0158 | 6 | | INDUCTOR RF-CH-MLD 1UH 10% .105DX.26LG | 28480 | 9140-0158 |
| A12L17 | 9140-0158 | 6 | | INDUCTOR RF-CH-MLD 1UH 10% .105DX.26LG | 28480 | 9140-0158 |
| A12L18 | 9140-0114 | 4 | | INDUCTOR RF-CH-MLD 10UH 10% .166DX.385LG | 28480 | 9140-0114 |
| A12L19 | 9100-2251 | 0 | 3 | INDUCTOR RF-CH-MLD 220NH 10% .105DX.26LG | 28480 | 9100-2251 |
| A12L20 | 9100-2258 | 7 | | INDUCTOR RF-CH-MLD 1.2UH 10% .105DX.26LG | 28480 | 9100-2258 |
| A12L21 | 9100-2249 | 6 | 5 | INDUCTOR RF-CH-MLD 150NH 10% .105DX.26LG | 28480 | 9100-2249 |
| A12L22 | 9100-2259 | 8 | | INDUCTOR RF-CH-MLD 1.5UH 10% .105DX.26LG | 28480 | 9100-2259 |
| A12L23 | 9100-2247 | 4 | 3 | INDUCTOR RF-CH-MLD 100NH 10% .105DX.26LG | 28480 | 9100-2247 |
| A12L24 | 9140-0141 | 7 | | INDUCTOR RF-CH-MLD 680NH 10% .105DX.26LG | 28480 | 9140-0141 |
| A12L25 | 9140-0158 | 6 | | INDUCTOR RF-CH-MLD 1UH 10% .105DX.26LG | 28480 | 9140-0158 |
| A12L26 | 9100-2249 | 6 | | INDUCTOR RF-CH-MLD 150NH 10% .105DX.26LG | 28480 | 9100-2249 |
| A12L27 | 9100-2251 | 0 | | INDUCTOR RF-CH-MLD 220NH 10% .105DX.26LG | 28480 | 9100-2251 |
| A12L28 | 9140-0141 | 7 | | INDUCTOR RF-CH-MLD 680NH 10% .105DX.26LG | 28480 | 9140-0141 |
| A12L29 | 9100-2258 | 7 | | INDUCTOR RF-CH-MLD 1.2UH 10% .105DX.26LG | 28480 | 9100-2258 |
| A12L30 | 9100-2258 | 7 | | INDUCTOR RF-CH-MLD 1.2UH 10% .105DX.26LG | 28480 | 9100-2258 |
| A12L31 | 9140-0141 | 7 | | INDUCTOR RF-CH-MLD 680NH 10% .105DX.26LG | 28480 | 9140-0141 |
| A12L32 | 9100-2249 | 6 | | INDUCTOR RF-CH-MLD 150NH 10% .105DX.26LG | 28480 | 9100-2249 |
| A12L33 | 9100-2249 | 6 | | INDUCTOR RF-CH-MLD 150NH 10% .105DX.26LG | 28480 | 9100-2249 |
| A12L34 | 9100-2247 | 4 | | INDUCTOR RF-CH-MLD 100NH 10% .105DX.26LG | 28480 | 9100-2247 |
| A12L35 | 9100-2249 | 6 | | INDUCTOR RF-CH-MLD 150NH 10% .105DX.26LG | 28480 | 9100-2249 |
| A12L36 | 9100-2247 | 4 | | INDUCTOR RF-CH-MLD 100NH 10% .105DX.26LG | 28480 | 9100-2247 |
| A12L37 | 9140-0114 | 4 | | INDUCTOR RF-CH-MLD 10UH 10% .166DX.385LG | 28480 | 9140-0114 |
| A12L38 | 9140-0114 | 4 | | INDUCTOR RF-CH-MLD 10UH 10% .166DX.385LG | 28480 | 9140-0114 |
| A12L39 | 9100-2251 | 0 | | INDUCTOR RF-CH-MLD 220NH 10% .105DX.26LG | 28480 | 9100-2251 |
| A12L40 | 9100-0368 | 6 | 1 | INDUCTOR RF-CH-MLD 330NH 10% .105DX.26LG | 28480 | 9100-0368 |
| A12L41 | 9140-0114 | 4 | | INDUCTOR RF-CH-MLD 10UH 10% .166DX.385LG | 28480 | 9140-0114 |
| A12L42 | 9140-0114 | 4 | | INDUCTOR RF-CH-MLD 10UH 10% .166DX.385LG | 28480 | 9140-0114 |
| A12L43 | 9140-0114 | 4 | | INDUCTOR RF-CH-MLD 10UH 10% .166DX.385LG | 28480 | 9140-0114 |
| A12L44 | 9140-0114 | 4 | | INDUCTOR RF-CH-MLD 10UH 10% .166DX.385LG | 28480 | 9140-0114 |
| A12Q1 | 1853-0354 | 7 | | TRANSISTOR PNP SI TO-92 PD=350MW | 28480 | 1853-0354 |
| A12Q2 | 1854-0215 | 1 | | TRANSISTOR NPN SI PD=350MW FT=300MHZ | 04713 | 2N3904 |
| A12Q3 | 1854-0215 | 1 | | TRANSISTOR NPN SI PD=350MW FT=300MHZ | 04713 | 2N3904 |
| A12Q4 | 1854-0628 | 0 | | TRANSISTOR NPN SI TO-92 PD=625MW | 04713 | MPS-H17 |
| A12Q5 | 1854-0215 | 1 | | TRANSISTOR NPN SI PD=350MW FT=300MHZ | 04713 | 2N3904 |
| A12Q6 | 1853-0036 | 2 | | TRANSISTOR PNP SI PD=310MW FT=250MHZ | 28480 | 1853-0036 |
| A12Q7 | 1854-0247 | 9 | | TRANSISTOR NPN SI TO-39 PD=1W FT=800MHZ | 28480 | 1854-0247 |
| A12Q8 | 1854-0215 | 1 | | TRANSISTOR NPN SI PD=350MW FT=300MHZ | 04713 | 2N3904 |
| A12Q9 | 1854-0628 | 0 | | TRANSISTOR NPN SI TO-92 PD=625MW | 04713 | MPS-H17 |
| A12Q10 | 1853-0036 | 2 | | TRANSISTOR PNP SI PD=310MW FT=250MHZ | 28480 | 1853-0036 |
| A12Q11 | 1854-0215 | 1 | | TRANSISTOR NPN SI PD=350MW FT=300MHZ | 04713 | 2N3904 |
| A12Q12 | 1854-0247 | 9 | | TRANSISTOR NPN SI TO-39 PD=1W FT=800MHZ | 28480 | 1854-0247 |
| A12Q13 | 1854-0247 | 9 | | TRANSISTOR NPN SI TO-39 PD=1W FT=800MHZ | 28480 | 1854-0247 |
| A12Q14 | 1854-0247 | 9 | | TRANSISTOR NPN SI TO-39 PD=1W FT=800MHZ | 28480 | 1854-0247 |
| A12Q15 | 1854-0215 | 1 | | TRANSISTOR NPN SI PD=350MW FT=300MHZ | 04713 | 2N3904 |
| A12R1 | 0757-0280 | 3 | | RESISTOR 1K 1% .125W F TC=0+-100 | 24546 | C4-1/8-T0-1001-F |
| A12R2 | 0698-0082 | 7 | | RESISTOR 464 1% .125W F TC=0+-100 | 24546 | C4-1/8-T0-4640-F |
| A12R3 | 0698-3438 | 3 | | RESISTOR 147 1% .125W F TC=0+-100 | 24546 | C4-1/8-T0-147R-F |
| A12R4 | 0757-0397 | 3 | | RESISTOR 68.1 1% .125W F TC=0+-100 | 24546 | C4-1/8-T0-68R1-F |
| A12R5 | 0757-0280 | 3 | | RESISTOR 1K 1% .125W F TC=0+-100 | 24546 | C4-1/8-T0-1001-F |

See introduction to this section for ordering information
*Indicates factory selected value

## Table 6-3. Replaceable Parts

| Reference Designation | HP Part Number | C D | Qty | Description | Mfr Code | Mfr Part Number |
|---|---|---|---|---|---|---|
| A12R6 | 0757-0395 | 1 | | RESISTOR 56.2 1% .125W F TC=0+-100 | 24546 | C4-1/8-T0-56R2-F |
| A12R7 | 0757-1094 | 9 | | RESISTOR 1.47K 1% .125W F TC=0+-100 | 24546 | C4-1/8-T0-1471-F |
| A12R8 | 0698-3438 | 3 | | RESISTOR 147 1% .125W F TC=0+-100 | 24546 | C4-1/8-T0-147R-F |
| A12R9 | 0698-0084 | 9 | | RESISTOR 2.15K 1% .125W F TC=0+-100 | 24546 | C4-1/8-T0-2151-F |
| A12R10 | 0757-0279 | 0 | | RESISTOR 3.16K 1% .125W F TC=0+-100 | 24546 | C4-1/8-T0-3161-F |
| A12R11 | 0757-0401 | 0 | | RESISTOR 100 1% .125W F TC=0+-100 | 24546 | C4-1/8-T0-101-F |
| A12R12 | 0757-0280 | 3 | | RESISTOR 1K 1% .125W F TC=0+-100 | 24546 | C4-1/8-T0-1001-F |
| A12R13 | 0757-0421 | 4 | | RESISTOR 825 1% .125W F TC=0+-100 | 24546 | C4-1/8-T0-825R-F |
| A12R14 | 0757-0280 | 3 | | RESISTOR 1K 1% .125W F TC=0+-100 | 24546 | C4-1/8-T0-1001-F |
| A12R15 | 0698-3160 | 8 | | RESISTOR 31.6K 1% .125W F TC=0+-100 | 24546 | C4-1/8-T0-3162-F |
| A12R16 | 0698-0084 | 9 | | RESISTOR 2.15K 1% .125W F TC=0+-100 | 24546 | C4-1/8-T0-2151-F |
| A12R17 | 0757-0397 | 3 | | RESISTOR 68.1 1% .125W F TC=0+-100 | 24546 | C4-1/8-T0-68R1-F |
| A12R18 | 0698-3444 | 1 | | RESISTOR 316 1% .125W F TC=0+-100 | 24546 | C4-1/8-T0-316R-F |
| A12R19 | 0698-3438 | 3 | | RESISTOR 147 1% .125W F TC=0+-100 | 24546 | C4-1/8-T0-147R-F |
| A12R20 | 0698-3438 | 3 | | RESISTOR 147 1% .125W F TC=0+-100 | 24546 | C4-1/8-T0-147R-F |
| A12R21 | 0757-1094 | 9 | | RESISTOR 1.47K 1% .125W F TC=0+-100 | 24546 | C4-1/8-T0-1471-F |
| A12R22 | 0757-0442 | 9 | | RESISTOR 10K 1% .125W F TC=0+-100 | 24546 | C4-1/8-T0-1002-F |
| A12R23 | 0757-0419 | 0 | | RESISTOR 681 1% .125W F TC=0+-100 | 24546 | C4-1/8-T0-681R-F |
| A12R24 | 0757-0421 | 4 | | RESISTOR 825 1% .125W F TC=0+-100 | 24546 | C4-1/8-T0-825R-F |
| A12R25 | 0757-0397 | 3 | | RESISTOR 68.1 1% .125W F TC=0+-100 | 24546 | C4-1/8-T0-68R1-F |
| A12R26 | 0698-0084 | 9 | | RESISTOR 2.15K 1% .125W F TC=0+-100 | 24546 | C4-1/8-T0-2151-F |
| A12R27 | 0698-3160 | 8 | | RESISTOR 31.6K 1% .125W F TC=0+-100 | 24546 | C4-1/8-T0-3162-F |
| A12R28 | 2100-0580 | 7 | 1 | RESISTOR-TRMR 500K 10% C TOP-ADJ 1-TRN | 28480 | 2100-0580 |
| A12R29 | 0698-3260 | 9 | | RESISTOR 464K 1% .125W F TC=0+-100 | 28480 | 0698-3260 |
| A12R30 | 0757-0280 | 3 | | RESISTOR 1K 1% .125W F TC=0+-100 | 24546 | C4-1/8-T0-1001-F |
| A12R31 | 0698-4037 | 0 | | RESISTOR 46.4 1% .125W F TC=0+-100 | 24546 | C4-1/8-T0-46R4-F |
| A12R32 | 0757-0419 | 0 | | RESISTOR 681 1% .125W F TC=0+-100 | 24546 | C4-1/8-T0-681R-F |
| A12R33 | 0757-0395 | 1 | | RESISTOR 56.2 1% .125W F TC=0+-100 | 24546 | C4-1/8-T0-56R2-F |
| A12R34 | 2100-3383 | 4 | | RESISTOR-TRMR 50 10% C TOP-ADJ 1-TRN | 28480 | 2100-3383 |
| A12R35 | 0698-0082 | 7 | | RESISTOR 464 1% .125W F TC=0+-100 | 24546 | C4-1/8-T0-4640-F |
| A12R36 | 0757-0419 | 0 | | RESISTOR 681 1% .125W F TC=0+-100 | 24546 | C4-1/8-T0-681R-F |
| A12R37 | 0698-3444 | 1 | | RESISTOR 316 1% .125W F TC=0+-100 | 24546 | C4-1/8-T0-316R-F |
| A12R38 | 0757-1094 | 9 | | RESISTOR 1.47K 1% .125W F TC=0+-100 | 24546 | C4-1/8-T0-1471-F |
| A12R39 | 0757-0421 | 4 | | RESISTOR 825 1% .125W F TC=0+-100 | 24546 | C4-1/8-T0-825R-F |
| A12R40 | 0757-0401 | 0 | | RESISTOR 100 1% .125W F TC=0+-100 | 24546 | C4-1/8-T0-101-F |
| A12R41 | 0698-3441 | 8 | | RESISTOR 215 1% .125W F TC=0+-100 | 24546 | C4-1/8-T0-215R-F |
| A12R42 | 0698-3444 | 1 | | RESISTOR 316 1% .125W F TC=0+-100 | 24546 | C4-1/8-T0-316R-F |
| A12R43 | 0757-0397 | 3 | | RESISTOR 68.1 1% .125W F TC=0+-100 | 24546 | C4-1/8-T0-68R1-F |
| A12R44 | 0757-0280 | 3 | | RESISTOR 1K 1% .125W F TC=0+-100 | 24546 | C4-1/8-T0-1001-F |
| A12R45 | 0698-3444 | 1 | | RESISTOR 316 1% .125W F TC=0+-100 | 24546 | C4-1/8-T0-316R-F |
| A12R46 | 0757-0401 | 0 | | RESISTOR 100 1% .125W F TC=0+-100 | 24546 | C4-1/8-T0-101-F |
| A12R47 | 0757-0397 | 3 | | RESISTOR 68.1 1% .125W F TC=0+-100 | 24546 | C4-1/8-T0-68R1-F |
| A12R48 | 0698-3441 | 8 | | RESISTOR 215 1% .125W F TC=0+-100 | 24546 | C4-1/8-T0-215R-F |
| A12R49 | 0698-0082 | 7 | | RESISTOR 464 1% .125W F TC=0+-100 | 24546 | C4-1/8-T0-4640-F |
| A12R50 | 0698-3444 | 1 | | RESISTOR 316 1% .125W F TC=0+-100 | 24546 | C4-1/8-T0-316R-F |
| A12R51 | 0698-3439 | 4 | 6 | RESISTOR 178 1% .125W F TC=0+-100 | 24546 | C4-1/8-T0-178R-F |
| A12R52 | 0698-3444 | 1 | | RESISTOR 316 1% .125W F TC=0+-100 | 24546 | C4-1/8-T0-316R-F |
| A12R53 | 0757-0419 | 0 | | RESISTOR 681 1% .125W F TC=0+-100 | 24546 | C4-1/8-T0-681R-F |
| A12R54 | 0698-3428 | 1 | | RESISTOR 14.7 1% .125W F TC=0+-100 | 03888 | PME55-1/8-T0-14R7-F |
| A12R55 | 0698-3439 | 4 | | RESISTOR 178 1% .125W F TC=0+-100 | 24546 | C4-1/8-T0-178R-F |
| A12R56 | 0698-0082 | 7 | | RESISTOR 464 1% .125W F TC=0+-100 | 24546 | C4-1/8-T0-4640-F |
| A12R57 | 0757-0397 | 3 | | RESISTOR 68.1 1% .125W F TC=0+-100 | 24546 | C4-1/8-T0-68R1-F |
| A12R58 | 0757-0180 | 2 | | RESISTOR 31.6 1% .125W F TC=0+-100 | 28480 | 0757-0180 |
| A12R59 | 0698-4037 | 0 | | RESISTOR 46.4 1% .125W F TC=0+-100 | 24546 | C4-1/8-T0-46R4-F |
| A12R60 | 0757-0397 | 3 | | RESISTOR 68.1 1% .125W F TC=0+-100 | 24546 | C4-1/8-T0-68R1-F |
| A12R61 | 0757-0401 | 0 | | RESISTOR 100 1% .125W F TC=0+-100 | 24546 | C4-1/8-T0-101-F |
| A12R62 | 0757-0180 | 2 | | RESISTOR 31.6 1% .125W F TC=0+-100 | 28480 | 0757-0180 |
| A12R63 | 0698-4037 | 0 | | RESISTOR 46.4 1% .125W F TC=0+-100 | 24546 | C4-1/8-T0-46R4-F |
| A12R64 | 0698-3439 | 4 | | RESISTOR 178 1% .125W F TC=0+-100 | 24546 | C4-1/8-T0-178R-F |
| A12R65 | 0698-3444 | 1 | | RESISTOR 316 1% .125W F TC=0+-100 | 24546 | C4-1/8-T0-316R-F |
| A12R66 | 0757-0397 | 3 | | RESISTOR 68.1 1% .125W F TC=0+-100 | 24546 | C4-1/8-T0-68R1-F |
| A12R67 | 0757-0401 | 0 | | RESISTOR 100 1% .125W F TC=0+-100 | 24546 | C4-1/8-T0-101-F |
| A12R68 | 0757-0180 | 2 | | RESISTOR 31.6 1% .125W F TC=0+-100 | 28480 | 0757-0180 |
| A12R69 | 0698-3439 | 4 | | RESISTOR 178 1% .125W F TC=0+-100 | 24546 | C4-1/8-T0-178R-F |
| A12R70 | 0698-3444 | 1 | | RESISTOR 316 1% .125W F TC=0+-100 | 24546 | C4-1/8-T0-316R-F |
| A12R71 | 0757-0399 | 5 | | RESISTOR 82.5 1% .125W F TC=0+-100 | 24546 | C4-1/8-T0-82R5-F |
| A12R72 | 0757-0180 | 2 | | RESISTOR 31.6 1% .125W F TC=0+-100 | 28480 | 0757-0180 |
| A12R73 | 0757-0401 | 0 | | RESISTOR 100 1% .125W F TC=0+-100 | 24546 | C4-1/8-T0-101-F |
| A12R74 | 0698-3439 | 4 | | RESISTOR 178 1% .125W F TC=0+-100 | 24546 | C4-1/8-T0-178R-F |
| A12R75 | 0698-0082 | 7 | | RESISTOR 464 1% .125W F TC=0+-100 | 24546 | C4-1/8-T0-4640-F |
| A12R76 | 0757-0399 | 5 | | RESISTOR 82.5 1% .125W F TC=0+-100 | 24546 | C4-1/8-T0-82R5-F |
| A12R77 | 0757-0397 | 3 | | RESISTOR 68.1 1% .125W F TC=0+-100 | 24546 | C4-1/8-T0-68R1-F |
| A12R78 | 0698-3439 | 4 | | RESISTOR 178 1% .125W F TC=0+-100 | 24546 | C4-1/8-T0-178R-F |
| A12R79 | 0698-3444 | 1 | | RESISTOR 316 1% .125W F TC=0+-100 | 24546 | C4-1/8-T0-316R-F |
| A12R80 | 0757-0180 | 2 | | RESISTOR 31.6 1% .125W F TC=0+-100 | 28480 | 0757-0180 |

See introduction to this section for ordering information
*Indicates factory selected value

## Table 6-3. Replaceable Parts

| Reference Designation | HP Part Number | C D | Qty | Description | Mfr Code | Mfr Part Number |
|---|---|---|---|---|---|---|
| A12T1 | 9100-0822 | 7 | | TRANSFORMER:PULSE(11307) | 28480 | 9100-0822 |
| A12T2 | 9100-0822 | 7 | | TRANSFORMER:PULSE(11307) | 28480 | 9100-0822 |
| A12T3 | 9100-0822 | 7 | | TRANSFORMER:PULSE(11307) | 28480 | 9100-0822 |
| A12T4 | 9100-0822 | 7 | | TRANSFORMER:PULSE(11307) | 28480 | 9100-0822 |
| A12T5 | 9100-0822 | 7 | | TRANSFORMER:PULSE(11307) | 28480 | 9100-0822 |
| A12T6 | 9100-0822 | 7 | | TRANSFORMER:PULSE(11307) | 28480 | 9100-0822 |
| A12U1 | 1826-0933 | 4 | | IC NJM78L12A V RGLTR TO-92 | | NJM78L12A |
| A12U2 | 1826-0139 | 9 | | IC OP AMP GP DUAL 8-DIP-P PKG | 01928 | CA1458G |
| A12U3 | 1826-0282 | 3 | | IC V RGLTR TO-92 | 04713 | MC79L12ACP |
| A12U4 | 1826-0933 | 4 | | IC NJM78L12A V RGLTR TO-92 | | NJM78L12A |
| A12U5 | 1826-0933 | 4 | | IC NJM78L12A V RGLTR TO-92 | | NJM78L12A |
| A12U6 | 1826-0933 | 4 | | IC NJM78L12A V RGLTR TO-92 | | NJM78L12A |
| A12U7 | 1826-0282 | 3 | | IC V RGLTR TO-92 | 04713 | MC79L12ACP |
| | 04192-61683 | 8 | 1 | CABLE ASSEMBLY 240MM WHT | 28480 | 04192-61683 |
| | 04192-61684 | 9 | 1 | CABLE ASSEMBLY-COAX 180MM RED | 28480 | 04192-61684 |
| | 0340-0220 | 8 | | BEADS | 28480 | 0340-0220 |
| | 3050-0082 | 8 | | WASHER-FL NM NO. 4 .116-IN-ID .188-IN-OD | 28480 | 3050-0082 |
| | 9170-0029 | 3 | | CORE-SHIELDING BEAD | 28480 | 9170-0029 |
| | 04192-00671 | 6 | 1 | SHIELD | 28480 | 04192-00671 |
| | 04192-00672 | 7 | 1 | SHIELD | 28480 | 04192-00672 |
| A13 | 04262-66503 | | 1 | HP-IB CONNECTOR BOARD ASSEMBLY | | |

See introduction to this section for ordering information
*Indicates factory selected value

**Table 6-4. Board Mounted Hardware**

| Board Name | Part Number | Q'ty | Description | Location |
|---|---|---|---|---|
| A1 Range Resistor/Null Detector Board Assembly (04192-66501) | 04192-00691 | 1 | SHIELD CASE (A1-1) | Component Side |
| | 04192-00693 | 1 | SHIELD CASE (A1-2) | |
| | 04192-00613 | 1 | SHIELD CASE (A1-3) | |
| | 04192-00694 | 1 | SHIELD CASE (A1-4) | |
| | 04192-00692 | 1 | SHIELD CASE (A1-5) | |
| | 04192-00611 | 1 | SHIELD CASE (A1-6) | |
| | 1400-0115 | 24 | SCREW | |
| | 1400-0866 | 1 | CABLE CLAMP | |
| | 04192-00612 | 2 | SHIELD CASE | Pattern Side |
| | 04192-00695 | 2 | SHIELD CASE | |
| | 04192-00696 | 2 | SHIELD CASE | |
| | 2360-0121 | 16 | SCREW | |
| | 2360-0123 | 8 | SCREW | |
| A3 Reference Frequency Generator Board (04192-66503) | 04192-00617 | 2 | SHIELD CASE | Component Side |
| | 2360-0115 | 8 | SCREW | |
| | 04192-00618 | 2 | SHIELD CASE | Pattern Side |
| | 2360-0123 | 8 | SCREW | |
| A4 Fractional N Loop Board Assembly (04192-66504) | 04192-20001 | 1 | SHIELD | Component Side |
| | 04192-00604 | 1 | SHIELD PLATE | |
| | 2200-0123 | 4 | SCREW | |
| | 2190-0226 | 4 | WASHER | |
| | 04192-20002 | 1 | SHIELD | Pattern Side |
| | 0624-0077 | 2 | SCREW | |
| A5 Display and Keyboard Control Board Assembly (04192-66505) | 04192-00642 | 1 | SHIELD | Pattern Side |
| | 2360-0123 | 6 | SCREW | |
| A7 Power Supply Board Assembly (04192-66507) | 04192-00697 | 1 | SHIELD CASE | Component Side |
| | 2360-0192 | 4 | SCREW | |
| | 04192-00622 | 1 | SHIELD CASE | Pattern Side |
| | 2360-0202 | 4 | SCREW | |
| A8 Floating Power Supply/ Bias Supply Board Assembly (04192-66508) | 04192-00623 | 1 | SHIELD CASE (OUTER) | Component Side |
| | 04192-00625 | 1 | SHIELD CASE (INNER) | |
| | 04192-00627 | 1 | SHIELD CASE | |
| | 2360-0115 | 10 | SCREW | |
| | 1400-0866 | 1 | CABLE CLAMP | |
| | 04192-00624 | 1 | SHIELD CASE (OUTER) | Pattern Side |
| | 04192-00626 | 1 | SHIELD CASE (INNER) | |
| | 04192-00628 | 1 | SHIELD CASE | |
| | 2360-0200 | 4 | SCREW | |
| | 2360-0202 | 4 | SCREW | |
| | 2360-0121 | 2 | SCREW | |
| | 6960-0016 | 1 | PLUG HOLE | |

**Table 6-4. Board Mounting Hardware (cont'd)**

| Board Name | Part Number | Q'ty | Description | Location |
|---|---|---|---|---|
| A11 Process Amplifier Board Assembly (04192-66511) | 04192-00615 | 1 | SHIELD CASE (A11-1) | Component Side |
| | 04192-00614 | 1 | SHIELD CASE (A11-2) | |
| | 04192-00616 | 1 | SHIELD CASE (A11-3) | |
| | 04192-00619 | 1 | SHIELD CASE (A11-4) | |
| | 2360-0115 | 16 | SCREW | |
| | 04192-00612 | 4 | SHIELD CASE | Pattern Side |
| | 2360-0121 | 6 | SCREW | |
| A12 Modulator Board Assembly (04192-66512) | 04192-00667 | 1 | SHIELD CASE (A12-1) | Component Side |
| | 04192-00666 | 1 | SHIELD CASE (A12-2) | |
| | 04192-00661 | 1 | SHEILD CASE (A12-3) | |
| | 04192-00668 | 1 | SHIELD CASE (A12-4) | |
| | 04192-00669 | 1 | SHIELD CASE (A12-5) | |
| | 2360-0115 | 14 | SCREW | |
| | 1400-0866 | 2 | CABLE CLAMP | |
| | 04192-00663 | 1 | SHIELD CASE | Pattern Side |
| | 04192-00664 | 1 | SHIELD CASE (OUTER) | |
| | 04192-00665 | 2 | SHIELD CASE (INNER) | |
| | 2360-0123 | 4 | SCREW | |
| | 2360-0202 | 6 | SCREW | |
| | 2360-0200 | 4 | SCREW | |
| | 6960-0016 | 2 | PLUG HOLE | |
| | 2360-0115 | 57 | SCREW-MOUNTING | |

**Table 6-5. Interconnecting Cable Assemblies**

| Part Number | Description | From | To |
|---|---|---|---|
| 04192-61601 | | A4J3/A11J2/A8J2 | A7J5 |
| 04192-61602 | | A2J1/A3J1/A9J2 | A7J4 |
| 04192-61603 | 6 WIRES | A6J7 | A7J3 |
| 04192-61604 | | A1J9 | A8J3 |
| 04192-61611 | | A2J5 | A3J2 |
| 04192-61612 | 5 WIRES | RECORDER OUTPUT | A9J3 |
| 04192-61613 | 2 WIRES | EXT TRIGGER | A11J9 |
| 04192-61614 | 3 WIRES | A1J1 | A11J11 |
| 04192-61621 | POWER LINE CABLE 3 WIRES | LINE MODULE | A7J1 |
| 04192-61631 | FLAT CABLE | A2J2 | A6J5 |
| 04192-61632 | FLAT CABLE | A6J4 | A11J8 |
| 04192-61633 | FLAT CABLE | A2J4 | A4J7 |
| 04192-61633 | FLAT CABLE | A6J3 | A8J1 |
| 04192-61633 | FLAT CABLE | A6J2 | A9J1 |
| 04192-61635 | FLAT CABLE | A1J4 | A11J12 |
| 04192-61635 | FLAT CABLE | A1J5 | A12J11 |
| 04192-61641 | COAXIAL CABLE | $L_{CUR}$ | A1J7 |
| 04192-61642 | COAXIAL CABLE | $H_{POT}$ | A11J6 |
| 04192-61643 | COAXIAL CABLE | $H_{CUR}$ | A1J2 |
| 04192-61644 | COAXIAL CABLE | $L_{POT}$ | A1J12 |
| 04192-61651 | COAXIAL CABLE | CHANNEL A | A11J10 |
| 04192-61652 | COAXIAL CABLE | CHANNEL B | A11J5 |
| 04192-61653 | COAXIAL CABLE H (SHORT) | EXT VCO | A12J1 |
| 04192-61654 | COAXIAL CABLE H (LONG) | VCO OUTPUT | A4J1 |
| 04192-61657 | COAXIAL CABLE L | A1J8 | A12J5 |
| 04192-61658 | COAXIAL CABLE M | A1J6 | A12J4 |
| 04192-61659 | COAXIAL CABLE N | A11J12 | A12J7 |
| 04192-61660 | COAXIAL CABLE O | A1J13 | A12J6 |
| 04192-61661 | COAXIAL CABLE A | A2J3 | A11J3 |
| 04192-61662 | COAXIAL CABLE B | A1J15 | A3J5 |
| 04192-61663 | COAXIAL CABLE C | A1J14 | A3J6 |
| 04192-61664 | COAXIAL CABLE D | A1J3 | A8J4 |
| 04192-61665 | COAXIAL CABLE E | A3J8 | A4J5 |
| 04192-61666 | COAXIAL CABLE F | A3J9 | A12J3 |
| 04192-61667 | COAXIAL CABLE G | A3J4 | A6J8 |
| 04192-61668 | COAXIAL CABLE I | A3J10 | A12J8 |
| 04192-61671 | COAXIAL CABLE K | EXT REFERENCE | A3J7 |
| 04192-61672 | COAXIAL CABLE J | 1MHz OUTPUT | A3J3 |
| 04192-61691 | 1 WIRE | GND TERMINAL | A1GND |
| | FRONT PANEL CONTROL CABLE | A5 | A6J7 |
| 04192-61609 | HP-IB CABLE | A13 | A6J1 |
| | TRANSFORMER CABLE | TRANSFORMER | A7J2 |

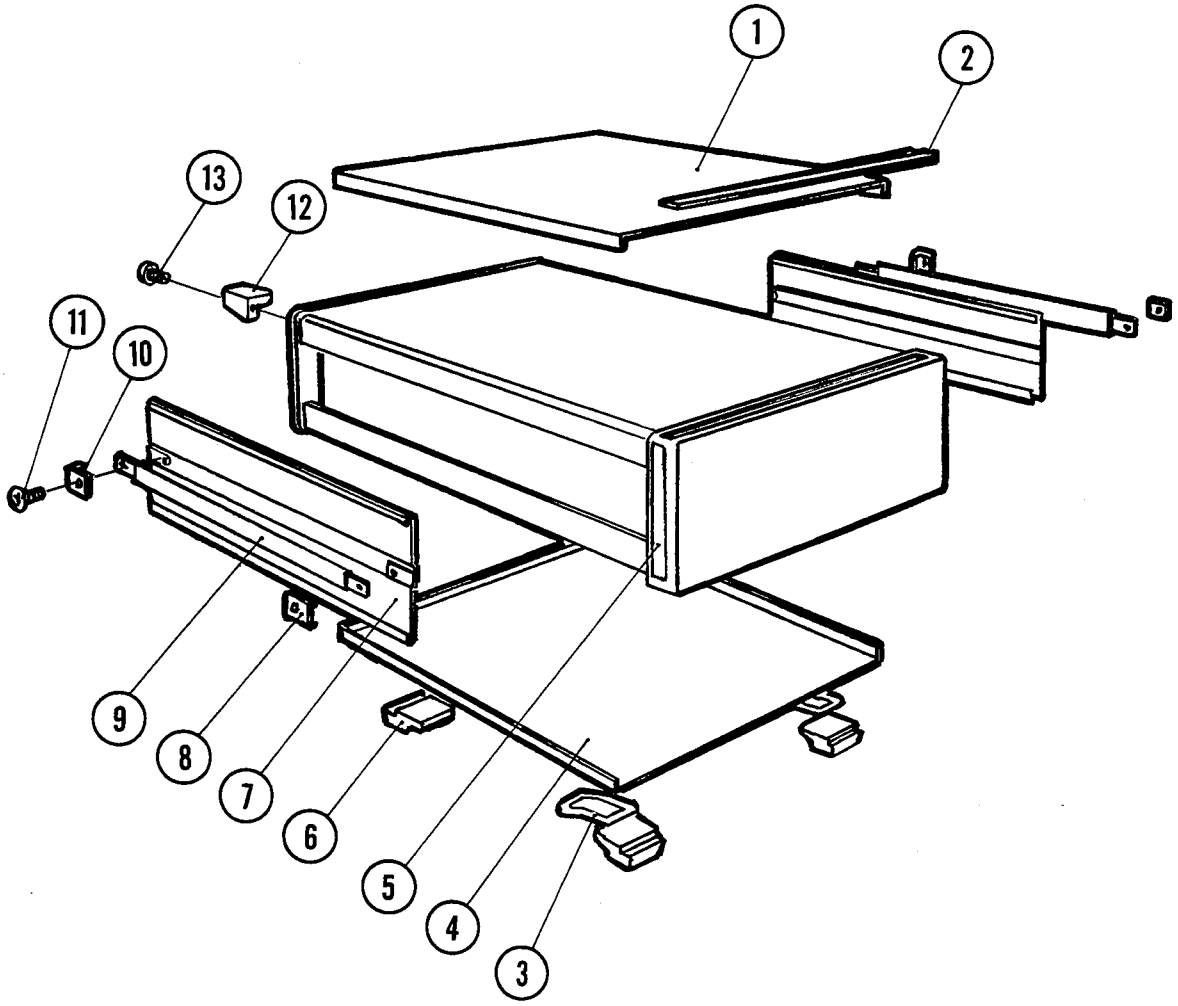


| Reference | HP Part No. | Qty | Description |
|---|---|---|---|
| 1 | 5061-9436 | 1 | TOP COVER |
| 2 | 5040-7202 | 1 | TOP TRIM |
| 3 | 1460-1345 | 2 | STAND |
| 4 | 5061-9448 | 1 | BOTTOM COVER |
| 5 | 5001-0441 | 2 | SIDE TRIM |
| 6 | 5040-7201 | 4 | FOOT (BOTTOM) |
| 7 | 5060-9948 | 2 | SIDE COVER |
| 8 | 5041-6819 | 2 | STRAP HANDLE CAP (FRONT) |
| 9 | 5060-9805 | 2 | STRAP HANDLE |
| 10 | 5041-6820 | 2 | STRAP HANDLE CAP (REAR) |
| 11 | 0515-1132 | 4 | SCREW |
| 12 | 5040-7221 | 4 | FOOT (REAR) |
| 13 | 0515-1232 | 4 | SCREW |

**Figure 6-1. Major Mechanical Parts on the Instrument Exterior — Exploded View.**

## Table 6-6. Parts Identification

| Reference Designation | HP Part Number | Qty | Description | Mfr Code | Mfr Part Number |
|---|---|---|---|---|---|
| 1 | 5041-6819 | 2 | STRAP HANDLE CAP (FRONT) | | |
| 2 | 0515-1132 | 4 | SCREW | | |
| 3 | 5060-9805 | 2 | STRAP HANDLE | | |
| 4 | 1400-1051 | 4 | CABLE CLAMP | | |
| 5 | 0515-1668 | 16 | SCREW | | |
| 6 | 5021-5838 | 4 | STRUT | | |
| 7 | 04192-60002 | 1 | SIDE PLATE (L) | | |
| 8 | 5060-9948 | 2 | SIDE COVER | | |
| 9 | 04192-00605 | 1 | HOOK | | |
| | 04192-08000 | 1 | SPRING | | |
| 10 | 04192-40002 | 1 | COUPLER | | |
| 11 | 3101-2216 | 1 | LINE SWITCH | | |
| | 3050-0235 | 2 | WASHER | | |
| | 2910-0025 | 2 | WASHER | | |
| | 0515-0150 | 2 | SCREW | | |
| 12 | 5041-6820 | 2 | STRAP HANDLE CAP (REAR) | | |
| 13 | 04192-01203 | 1 | ANGLE | | |
| 14 | 2110-0564 | 1 | FUSEHOLDER BODY | | |
| | 2110-0569 | 1 | FUSEHOLDER NUT | | |
| 15 | 2110-0305 | 1 | FUSE 1.25A 250V (198 ~ 250V) | | |
| | 2110-0016 | 1 | FUSE 0.6A 250V (90 ~ 126V) | | |
| 16 | 2110-0565 | 1 | FUSEHOLDER CAP | | |
| 17 | 1250-0118 | 7 | CONNECTOR-BNC | | |
| | 1250-0252 | 2 | CONNECTOR-BNC | | |
| 18 | 0360-1190 | 3 | SOLDER TERMINAL | | |
| 19 | 2190-0016 | 10 | WASHER | | |
| 20 | 2950-0001 | 7 | NUT | | |
| | 2950-0035 | 2 | NUT | | |
| 21 | 3160-0311 | 1 | FAN | | |
| 22 | 1250-1499 | 1 | ADAPTER-COAXAL | | |
| 23 | 9100-4223 | 1 | TRANSFORMER | | |
| 24 | 04192-00205 | 1 | REAR PANEL | | |
| 25 | 2360-0113 | 17 | SCREW | | |
| 26 | 1400-0611 | 3 | CABLE CLAMP | | |
| 27 | 5021-5808 | 1 | REAR FRAME | | |
| 28 | 1400-0866 | 24 | CABLE CLAMP | | |
| 29 | 1390-0281 | 2 | FASTENER-PLUNGER | | |
| 30 | 1390-0104 | 2 | FASTENER-GROMMET | | |
| 31 | 04192-60004 | 1 | SUB CHASSIS | | |
| | 2360-0115 | 6 | SCREW | | |
| | 6960-0016 | 4 | PLUG HOLE | | |
| 32 | 04192-60003 | 1 | MAIN CHASSIS | | |
| 33 | 04192-00641 | 1 | SHIELD | | |
| | 1400-0611 | 2 | CABLE CLAMP | | |
| | 2360-0113 | 3 | SCREW | | |
| 34 | 5060-9836 | 1 | TOP COVER | | |
| 35 | 04192-60001 | 1 | SIDE PLATE (R) | | |
| 36 | 0515-0889 | 6 | SCREW | | |
| 37 | 5021-5807 | 1 | FRONT FRAME | | |
| 38 | 04192-00206 | 1 | SUB PANEL | | |
| 39 | 04192-00201 | 1 | FRONT PANEL (HP) | | |
| | 04192-00202 | 1 | FRONT PANEL (YHP) | | |
| 40 | 04192-25002 | 3 | WINDOW | | |
| | 04192-85101 | 1 | UNIT FILM (DISPLAY A) | | |
| | 04192-85102 | 1 | UNIT FILM (DISPLAY B) | | |
| 41 | 7120-1254 | 1 | NAME PLATE (HP) | | |
| | 7120-0478 | 1 | NAME PLATE (YHP) | | |
| 42 | 04192-40001 | 1 | GUIDE | | |
| 43 | 1250-0252 | 6 | CONNECTOR-BNC | | |
| 44 | 04271-50025 | 6 | INSULATOR-BNC | | |
| 45 | 04271-50024 | 6 | INSULATOR-BNC | | |
| 46 | 2950-0035 | 6 | NUT | | |
| 47 | 1510-0130 | 1 | BINDING POST | | |
| 48 | 04192-40001 | 2 | INSULATOR | | |
| 49 | 3050-0028 | 2 | WASHER | | |
| 50 | 04192-61691 | 1 | TERMINAL (CABLE ASSY) | | |
| 51 | 2190-0084 | 1 | WASHER | | |
| 52 | 2950-0006 | 1 | NUT | | |
| 53 | 5060-9848 | 1 | BOTTOM COVER | | |
| 54 | 5041-0564 | 1 | KEY CAP | | |
| 55 | 5040-7201 | 4 | FOOT (BOTTOM) | | |
| 56 | 1460-1345 | 2 | STAND | | |
| 57 | 04192-25003 | 1 | ROD | | |

See introduction to this section for ordering information

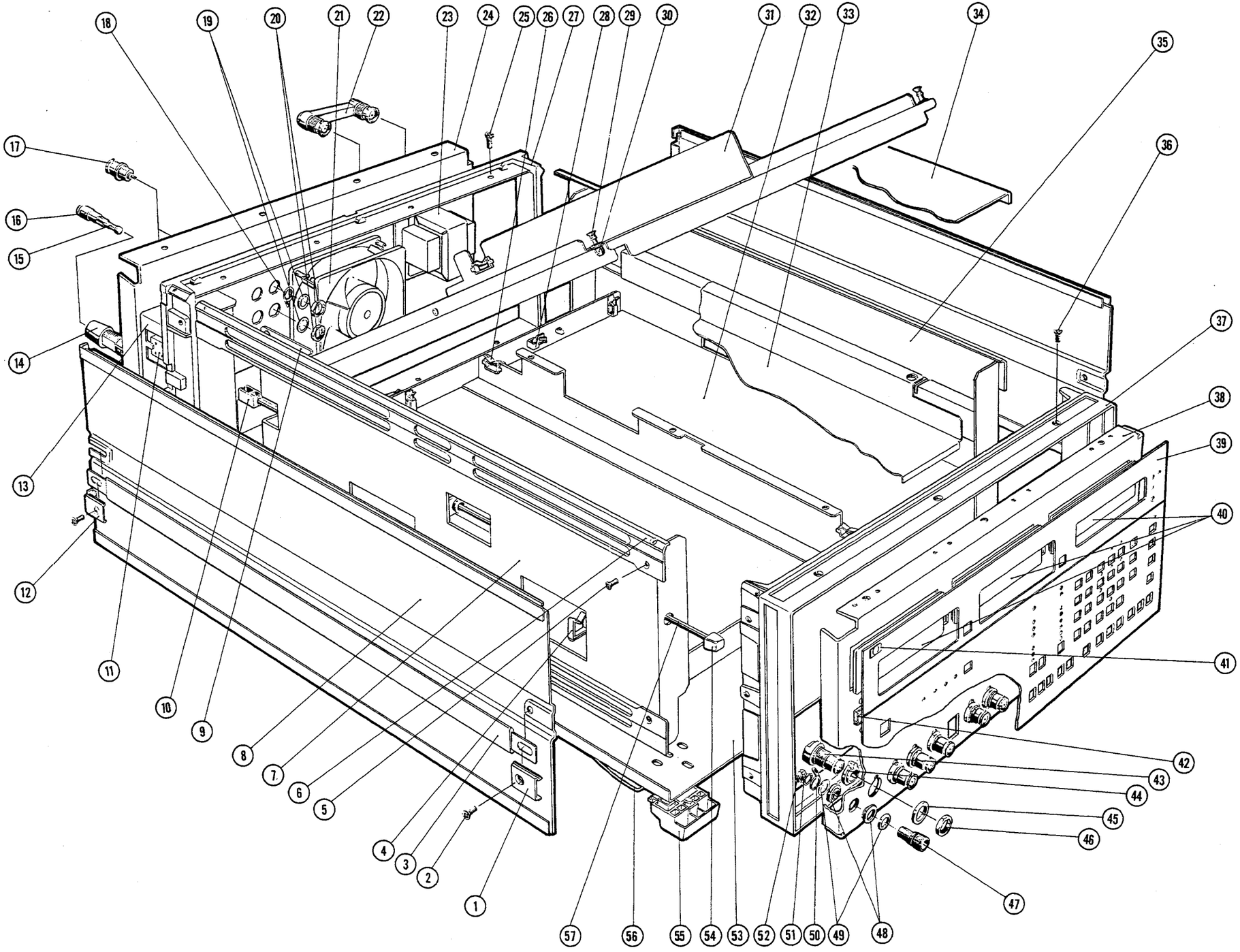
1
2
3
4
5
6
7
8
9
10
11
12
13
14
15
16
17
18
19
20
21
22
23
24
25
26
27
28
29
30
31
32
33
34
35
36
37
38
39
40
41
42
43
44
45
46
47
48
49
50
51
52
53
54
55
56
57

# SECTION VII
# MANUAL CHANGES

## 7-1. INTRODUCTION.

7-2. This section contains information for adapting this manual to instruments to which the contents do not directly apply. The following paragraphs explain how to adapt this manual to apply to older instruments with a lower serial prefix.

## 7-3. MANUAL CHANGES.

7-4. To adapt this manual to your particular instrument, refer to Table 7-1 and make all of the manual changes listed opposite your instrument serial number. Perform these changes in the summary by assembly.

7-5. If your instrument serial number is not listed on the title page of this manual or in Table 7-1 to the right, it may be documented in a yellow MANUAL CHANGES supplement. For additional information about serial number coverage, refer to INSTRUMENT COVERED BY MANUAL in Section I.

**Table 7-1. Manual Changes by Serial Number.**

| Serial Prefix or Number | Make Manual Changes |
|---|---|
| 2045J00253 and below | 1, 2, 3, 4, 5, 6, 7, 9, 10, 12, 13, 15, 16, 17, 18, 19, 20, 21, 22, 23, 24, 25, 26, 27 |
| 2045J00272 and below | 2, 3, 4, 5, 6, 7, 9, 10, 12, 13, 15, 16, 17, 18, 19, 20, 21, 22, 23, 24, 25, 26, 27 |
| 2045J00307 and below | 3, 4, 5, 6, 7, 8, 9, 10, 12 13, 15, 16, 17, 18, 19, 20, 21, 22, 23, 24, 25, 26, 27 |
| 2045J00317 and below | 4, 5, 6, 7, 8, 9, 10, 12, 13, 15, 16, 17, 18, 19, 20, 21, 22, 23, 24, 25, 26, 27 |
| 2045J00325 and below | 5, 6, 7, 8, 9, 10, 12, 13, 15, 16, 17, 18, 19, 20, 21, 22, 23, 24, 25, 26, 27 |
| 2045J00337 and below | 6, 7, 8, 9, 10, 12, 13, 15, 16, 17, 18, 19, 20, 21, 22, 23, 24, 25, 26, 27 |
| 2045J00363 and below | 7, 8, 9, 10, 12, 13, 15, 16, 17, 18, 19, 20, 21, 22, 23, 24, 25, 26, 27 |
| 2045J00422 and below | 8, 9, 10, 12, 13, 15, 16, 17, 18, 19, 20, 21, 22, 23, 24, 25, 26, 27 |
| 2045J00460 and below | 9, 10, 12, 13, 15, 16, 17, 18, 19, 20, 21, 22, 23, 24, 25, 26, 27 |
| 2045J00472 and below | 9, 10, 12, 13, 15, 16, 17, 18, 19, 20, 21, 23, 24, 25, 26, 27 |
| 2045J00522 and below | 10, 11, 12, 13, 15, 16, 17, 18, 19, 20, 21, 23, 24, 25, 26, 27 |
| 2045J00547 and below | 11, 12, 13, 14, 15, 16, 17, 18, 19, 20, 21, 23, 24, 25, 26, 27 |
| 2045J00572 and below | 12, 13, 14, 15, 16, 17, 18, 19, 20, 21, 23, 24, 25, 26, 27 |
| 2150J00735 and below | 13, 14, 15, 16, 17, 18, 19, 20, 21, 23, 24, 25, 26, 27 |
| 2150J00772 and below | 14, 15, 16, 17, 18, 19, 20, 21, 23, 24, 25, 26, 27 |
| 2150J01322 and below | 15, 16, 17, 18, 19, 20, 21, 23, 24, 25, 26, 27 |
| 2150J01536 and below | 15, 16, 18, 19, 20, 21, 23, 24, 25, 26, 27 |
| 2150J01572 and below | 15, 16, 19, 20, 21, 23, 24, 25, 26, 27 |
| 2150J01673 and below | 16, 19, 20, 21, 23, 24, 25, 26, 27 |
| 2150J01732 and below | 19, 20, 21, 23, 24, 25, 26, 27 |
| 2150J01797 and below | 20, 21, 23, 24, 25, 26, 27 |
| 2150J01977 and below | 21, 23, 24, 25, 26, 27 |
| 2150J02822 and below | 23, 24, 25, 26, 27 |
| 2150J02872 and below | 24, 25, 26, 27 |
| 2150J02993 and below | 25, 26, 27 |
| 2514J03472 and below | 26, 27 |
| 2514J04123 and below | 27 |

## CHANGE 1

Page 8-127, Figure 8-80, A7 Board Schematic Diagram:
Change the value of A7R66 to 1kΩ

Page 8-129, Figure 8-82, A8 Board Schematic Diagram:
Change the value of A8C71 to 110pF

Page 6-26 and 6-28, Table 6-3, Replaceable Parts:
See Table 7-2, Parts Information.

## CHANGE 2

Page 8-85, Figure 8-47, A1 Board Schematic Diagram:
Partially change the schematic as shown below:

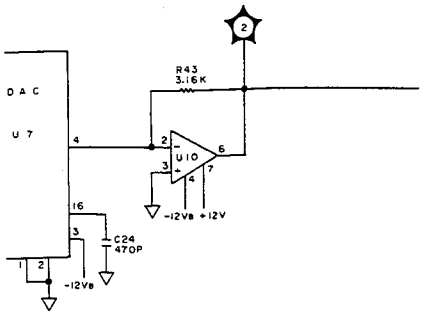


Page 8-78 and Page 8-84, Page 8-90, Figure 8-43, A1 Board Component Locations:
Partially change the component locations as shown below:

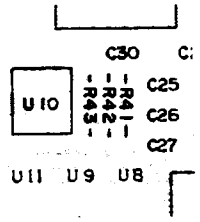


Page 6-4, Table 6-3, Replaceable Parts:
See Table 7-2, Parts Information.

CHANGE 3

Page 8-113, Figure 8-69, A4 Board Schematic Diagram:
Change tha values of A4R11 and R12 as follows:

R11: 383Ω
R12: 147kΩ

Partially change the schematic as shown below:

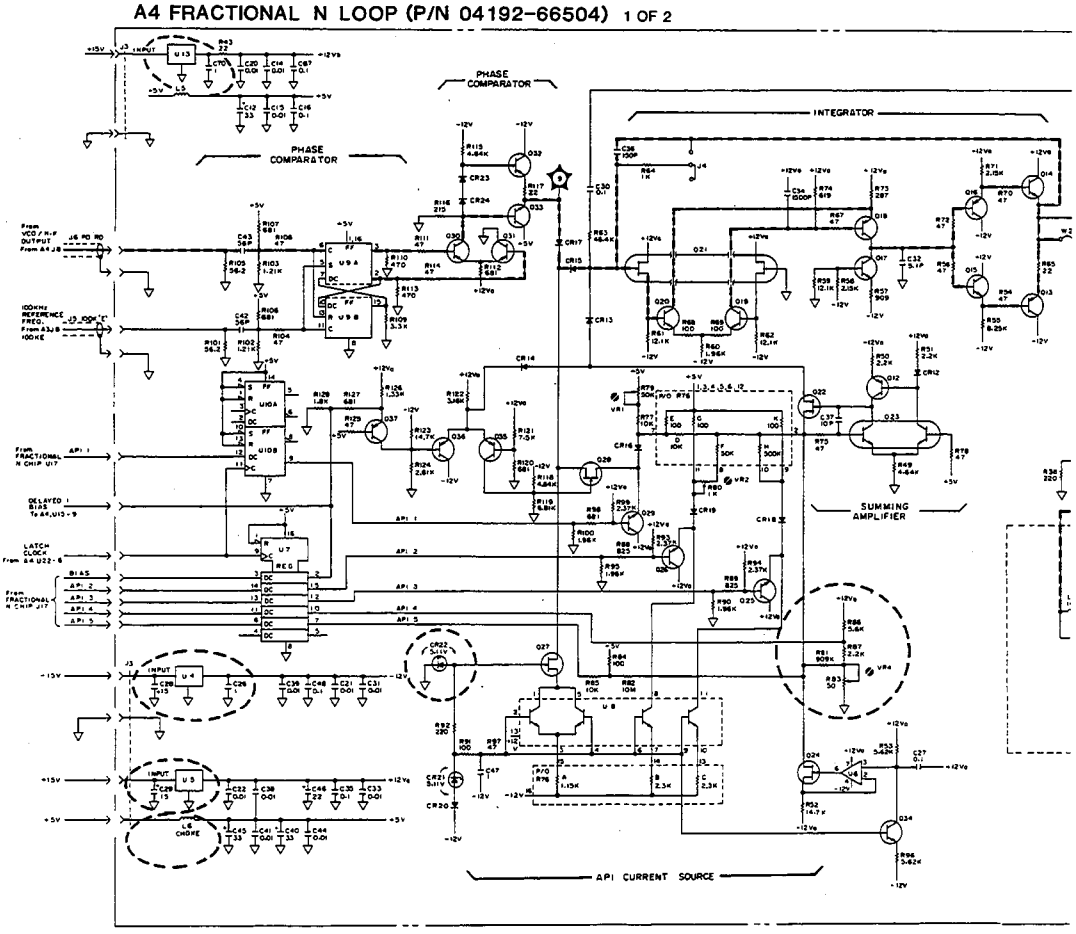

Page 8-112 and Page 8-115, Figure 8-68, A4 Board Component Locations:
Partially change the component locations as shown below:

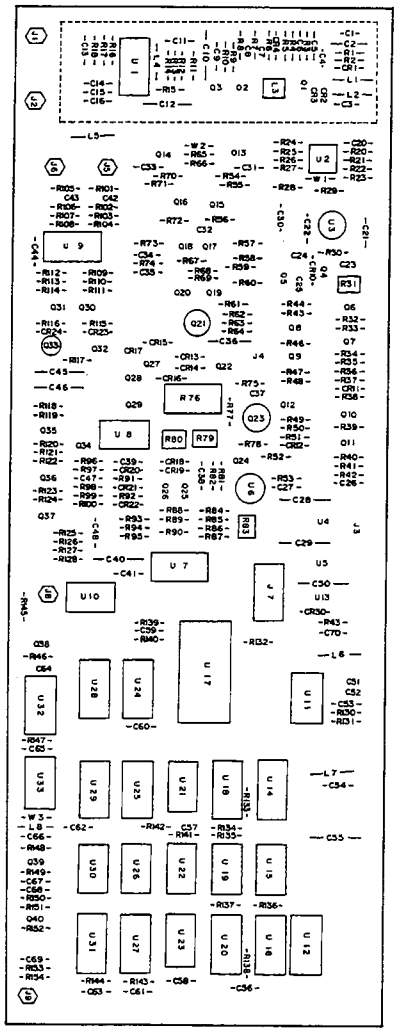

Page 8-103, Figure 8-60, A3 Board Schematic Diagram:
Partially chage the schematic as shown in Figure 7-1.

Page 8-115, Figure 8-71, A4 Board Schematic Diagram:
Partially change the schematic as shown in Figures 7-3 and 7-4.

Page 8-127, Figure 8-80, A7 Board Schematic Diagram:
Change the value of A7R54 to 2.2kΩ

Page 8-137, Figure 8-87, A9 Board Schematic Diagram:
Change the values of A9C4, A9C5 and A9C6 to 0.01 μF.

Pages 6-11, 6-13, 6-14, 6-15, 6-16, 6-17, 6-18, 6-26 and 6-31, Table 6-3 Replaceable Parts:
See Table 7-2, Parts Information.

CHANGE 4

Page 8-133, Figure 8-84, A8 Board Schematic Diagram:
Change the value of A8R61 to 422Ω

Change the value of A8R54 to 200Ω

Page 6-30, Table 6-3, Replaceable Parts:
See Table 7-2, Parts, Information.

CHANGE 5

Page 8-91, Figure 8-49, A1 Board Schematic Diagram:
Change the values of A1C15, C16 and C22 as follows:

C15: 2.2pF
C16: 8.2pF
C22: 1.2pF - 4.2pF

Page 6-3, Table 6-3, Replaceable Parts:
See Table 7-2, Parts, Information.

CHANGE 6

Page 8-112 and Page 8-115, Figure 8-68, A4 Board Component Locations:
Partially change the component location as shown below:

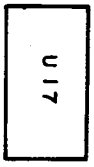


Page 6-15, Table 6-3 Replaceable Parts.
See Table 7-2, Parts Information.

CHANGE 7

Page 8-133, Figure 8-84, A8 Board Schematic Diagram:
Partially change the schematic as shown below:

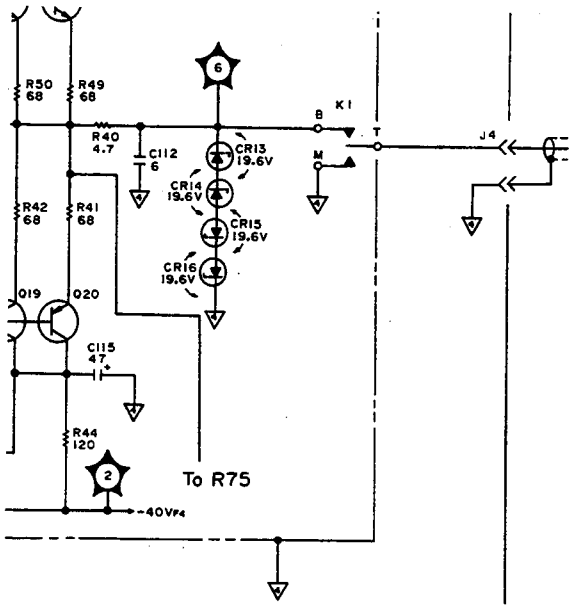

## CHANGE 8

Page 8-103, Figure 8-60, A3 Board Schematic Diagram:
Partially change the schematic as shown in Figure 7-1.

Page 8-113, Figure 8-69, A4 Board Schematic Diagram:
Change the values of A4R11 and R12 as follows:

R11: 383Ω
R12: 147kΩ

Partially change the schematic as shown in Figure 7-2.

Page 8-115, Figure 8-71, A4 Board Schematic Diagram:
Partially change the schematic as shown in Figures 7-3 and 7-4.

Page 8-112 and Page 8-115, Figure 8-68, A4 Board Component Locations:
Change the component location as shown in Figure 7-5.

Pages 6-11, 6-13, 6-14, 6-15, 6-16, 6-17 and 6-18, Table 6-3, Replaceable Parts:
See Table 7-2, Parts Information.

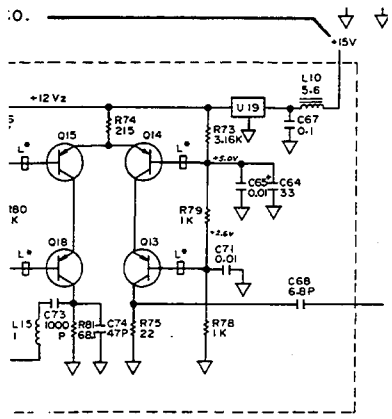


Figure 7-1.

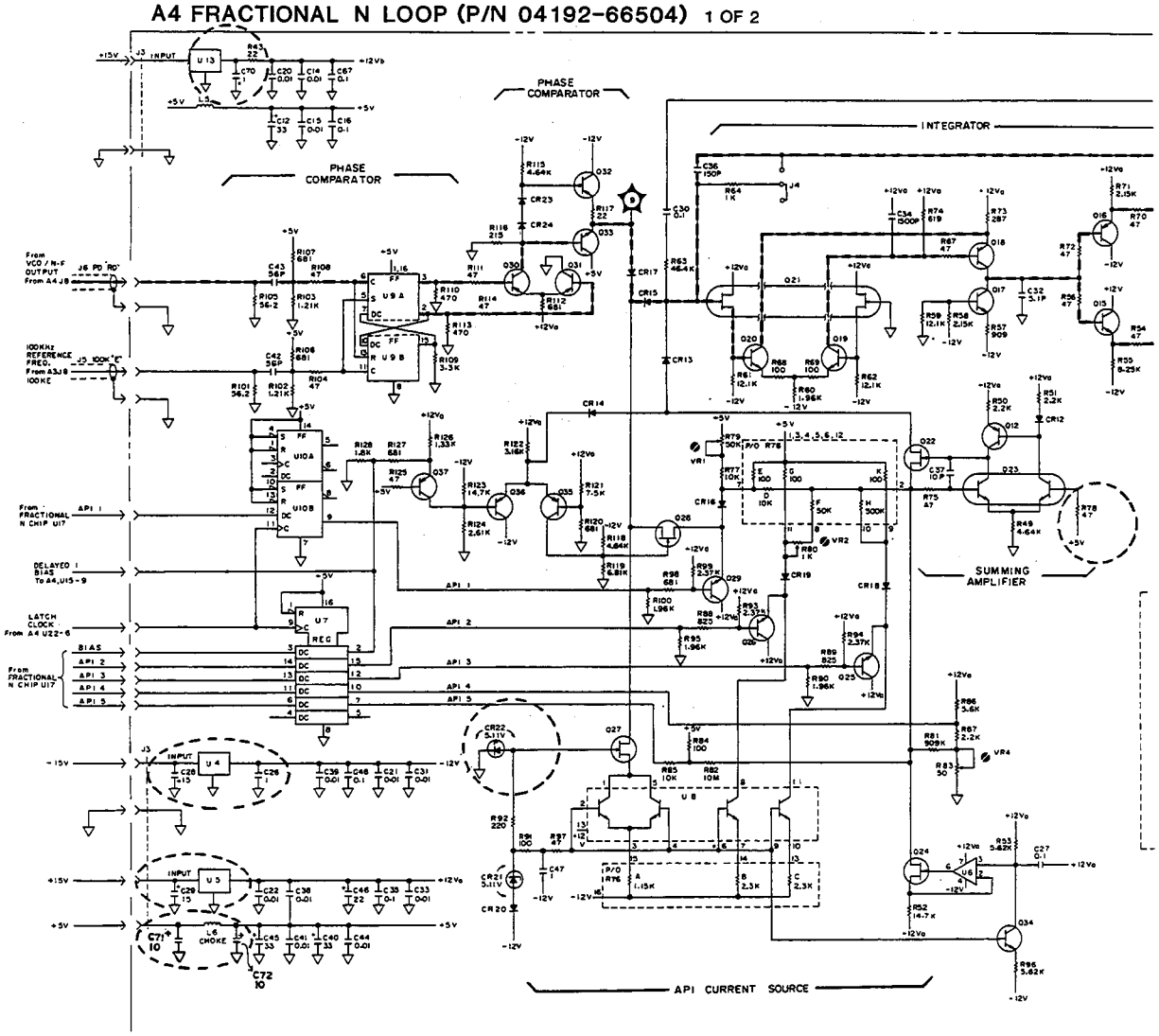


Figure 7-2.

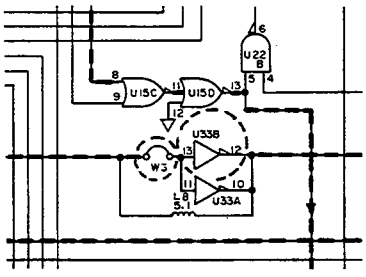


Figure 7-3.

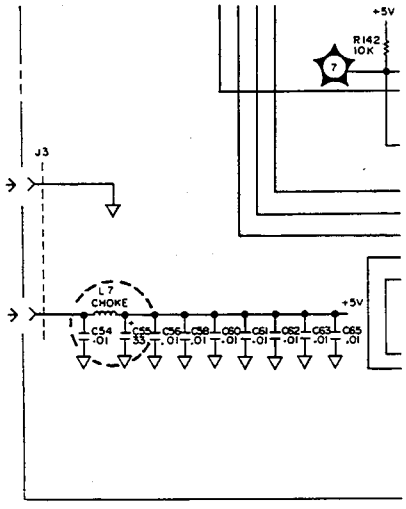


Figure 7-4.

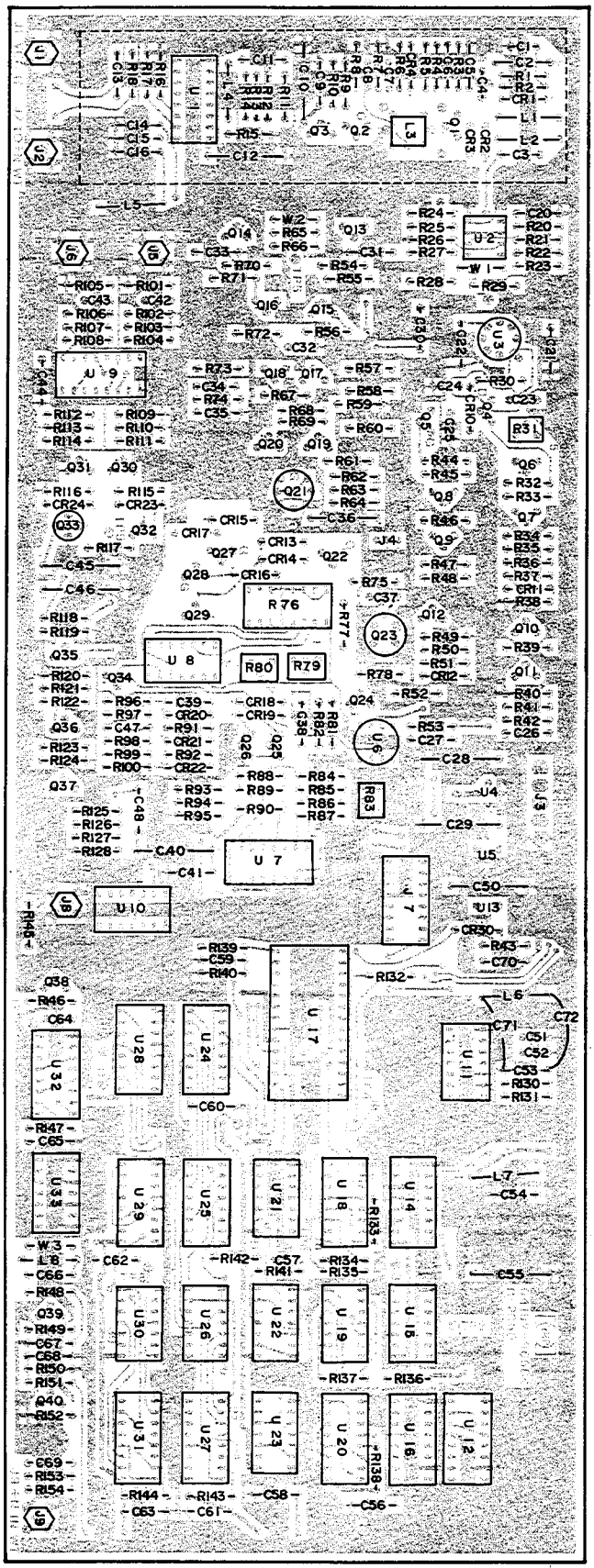

Figure 7-5.

CHANGE 9

Page 8-133, Figure 8-84, A8 Board Schematic Diagram:
Partially change the schematic as shown below:

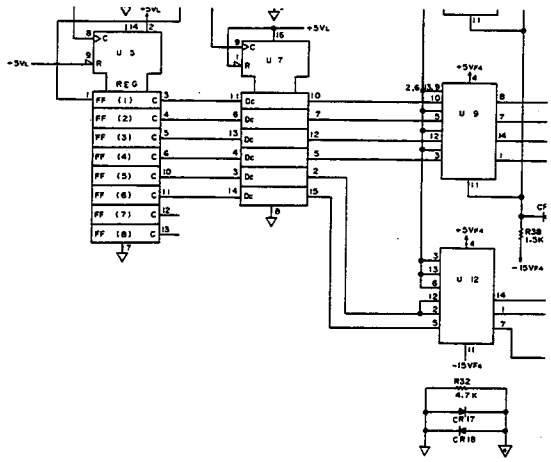


Pages 6-28, 6-29 and 6-30, Table 6-3, Replaceable Parts:
See Table 7-2, Parts Information.

Page 8-129 and Page 8-132, Figure 8-81, A8 Board Component Locations:
Change the component locations as shown below:

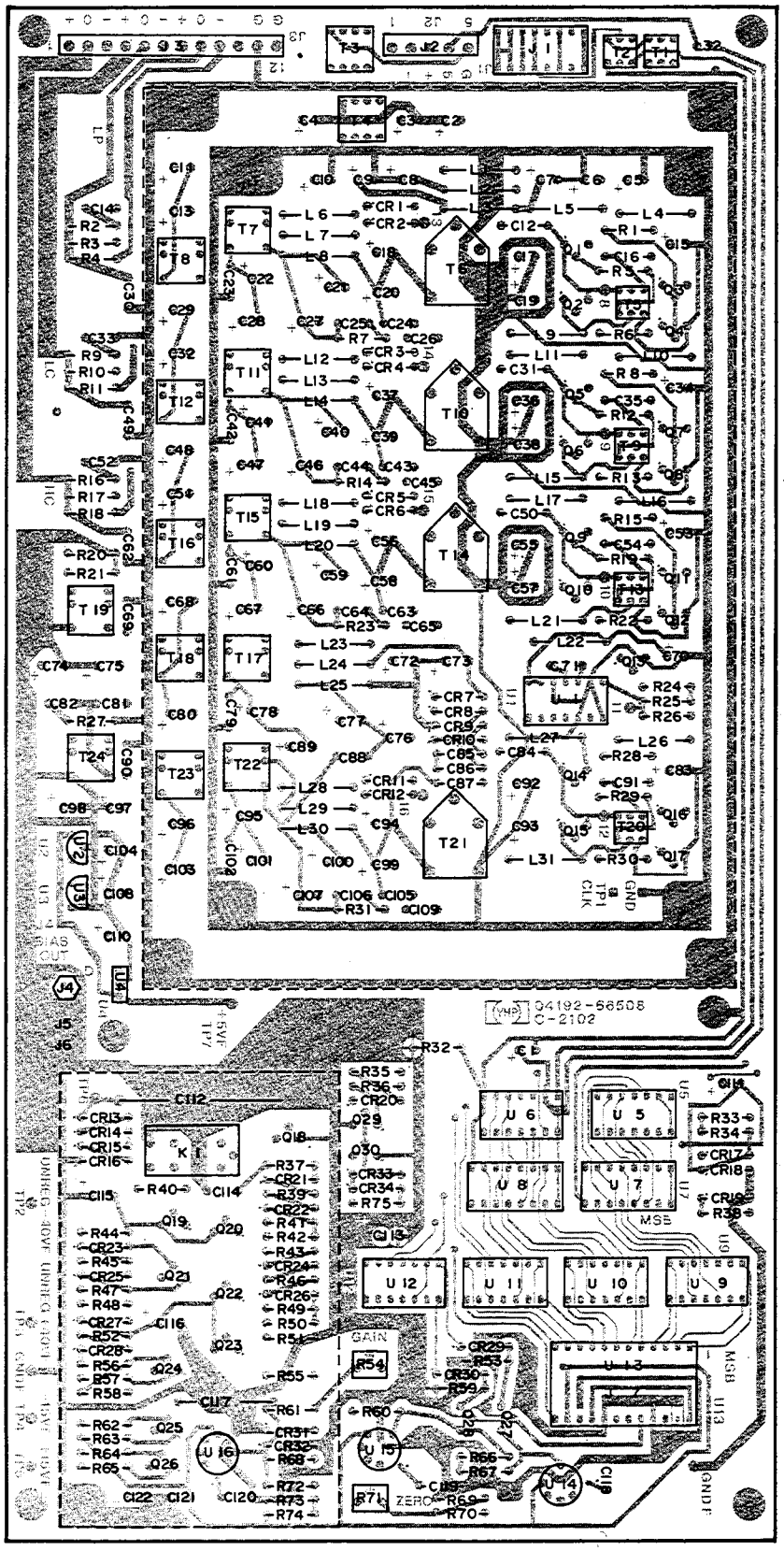

CHANGE 10

Page 8-112 and Page 8-115, Figure 8-68, A4 Board Component Locations:
Partially change the component locations as shown below:

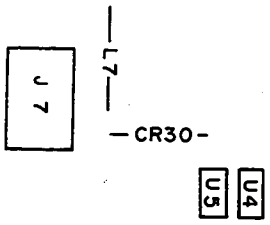


Page 8-115, Figure 8-71, A4 Board Schematic Diagram:
Partially change the schematic as shown below:

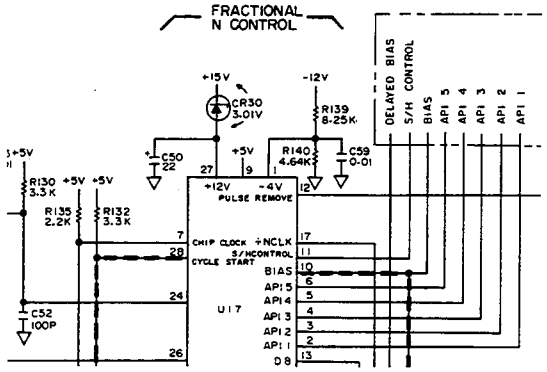


Page 6-15, Table 6-3, Replaceable Parts:
See Table 7-2, Parts Information.

CHANGE 11

Page 8-129 and Page 8-132, Figure 8-81, A8 Board Component Locations:
Partially change the component locations as shown below:

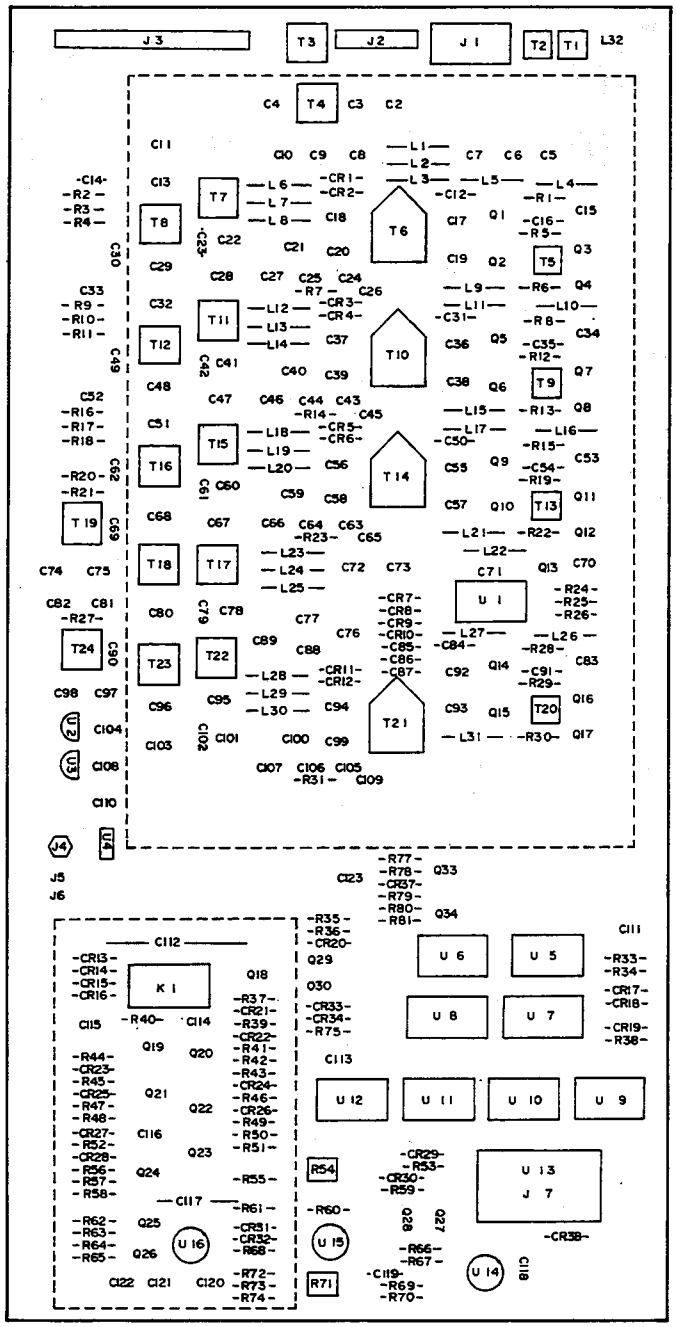

Page 8-133, Figure 8-84, A8 Board Schematic Diagram:
Partially change the schematic as shown below:

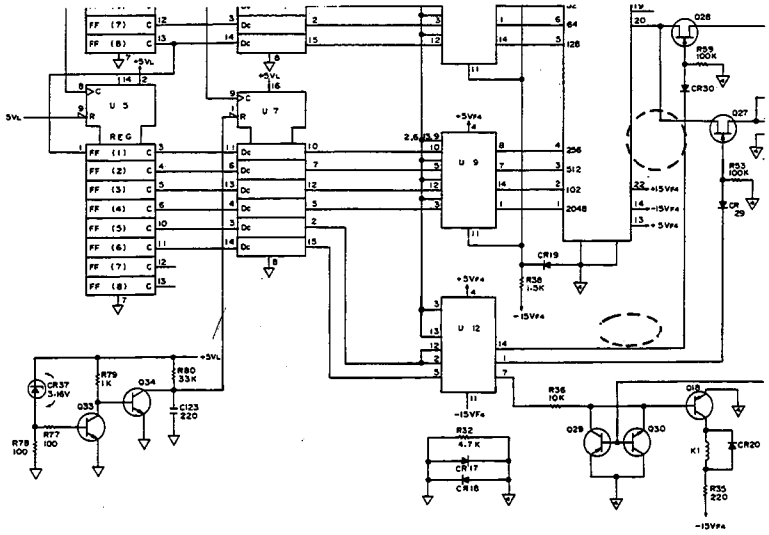

Page 6-29, Table 6-3, Replaceable Parts:
See Table 7-2, Parts Information.

CHANGE 12

Page 6-46, Table 6-6, Parts Identification:
See Table 7-2, Parts Information.

Page 2-2, Figure 2-1, Line Voltage and Fuse Selection:
Change the figure as shown below:

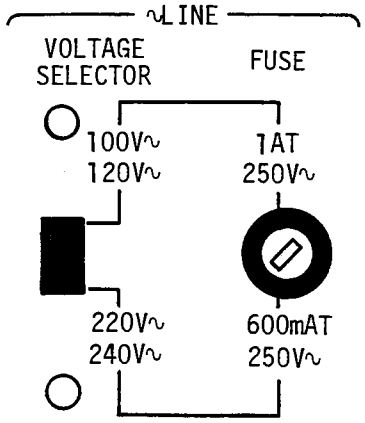

Page 8-127, Figure 8-80, A7 Board Schematic Diagram:
Partially change the schematic as shown below:

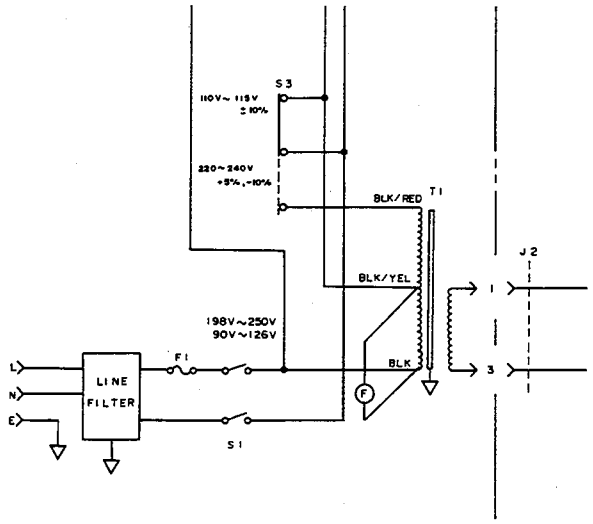


CHANGE 13

Page 8-85, Figure 8-47, A1 Board Schematic Diagram:
Change the value of A1R182 and A1R183 to 20kΩ

See Table 7-2, Parts Information.

CHANGE 14

Page 8-112 and Page 8-115, Figure 8-68 A4 Board Component Locations:
Partially change the component locations as shown below:

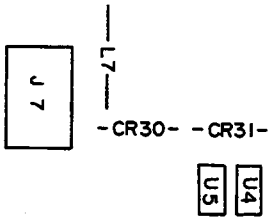

CHANGE 15

Figure 6-3, Replaceable Parts:
See Table 7-2. Parts Information.

Page 8-129 and 8-132, Figure 8-81, A8 Board Component Locations:
Partially change the figure as shown below:

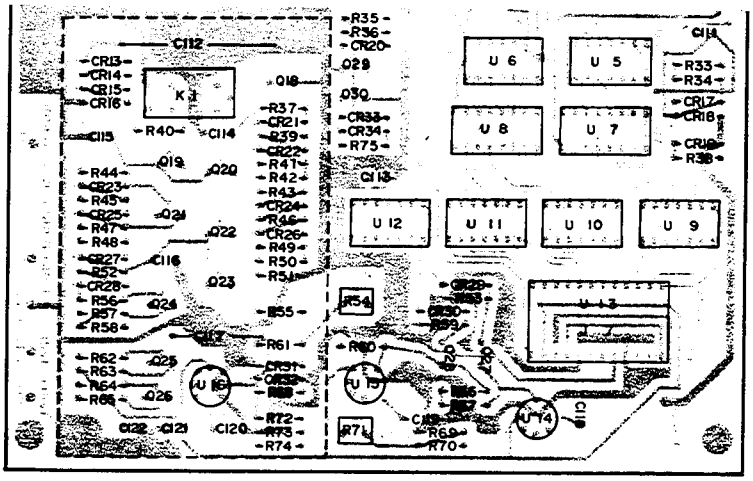


Page 8-133, Figure 8-84, A8 Board Schematic Diagram:
Partially change the figure as shown below:

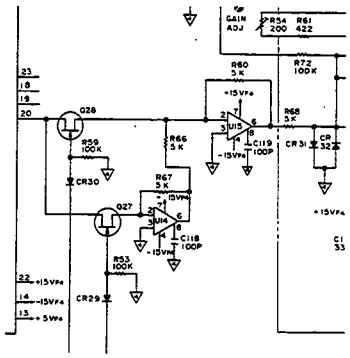


CHANGE 16

Table 6-3, Replaceable Parts:
See Table 7-2, Parts Information.

CHANGE 17

Page 6-5, 6-8, 6-9, and 6-10, Table 6-3 Replaceable parts:
See Table 7-2, Parts Information.

Page 8-78, 8-84 and 8-90, Figure 8-43, A1 Range Resistor/Null Detector Board Assembly Component Locations:
Change the Component Locations as shown below:

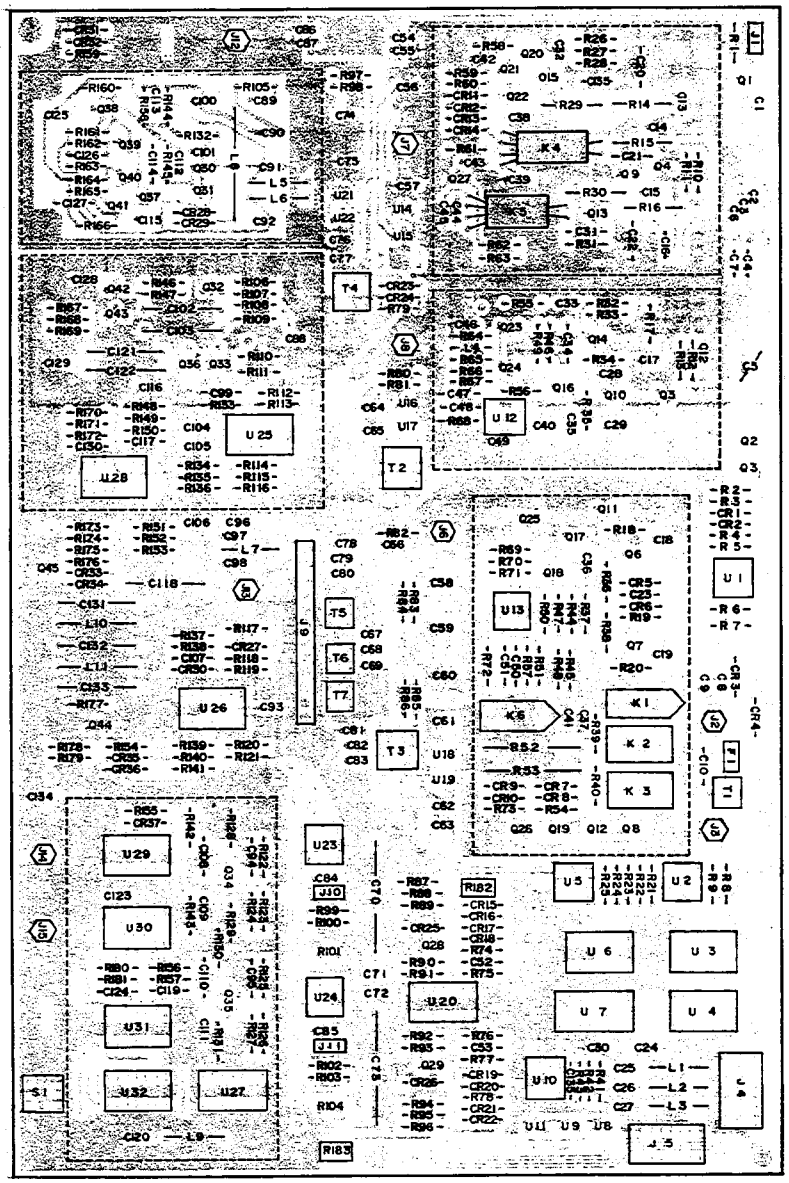

Page 8-96, Figure 8-54, A2 Phase Detector/A-D Converter Board Assembly Component Locations:

Change the Component Locations as shown below:

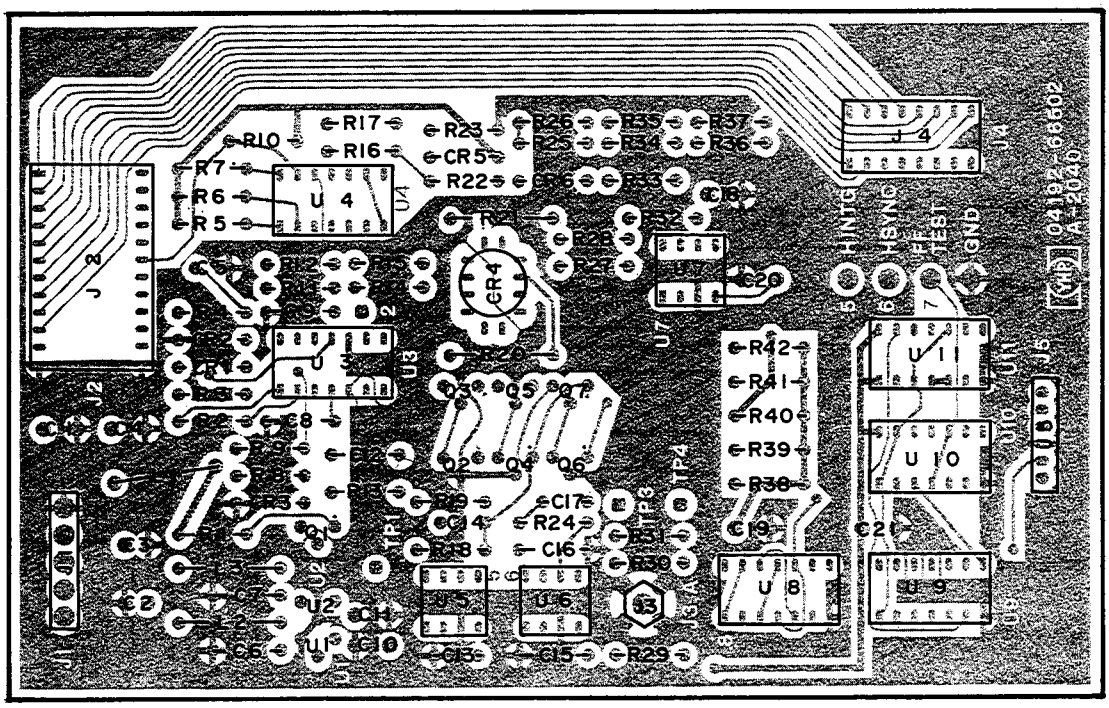


Page 8-85, Figure 8-47, A1 Range Resistor/Null Detector Board Assembly Schematic Diagram:

Change the diagram as shown below:

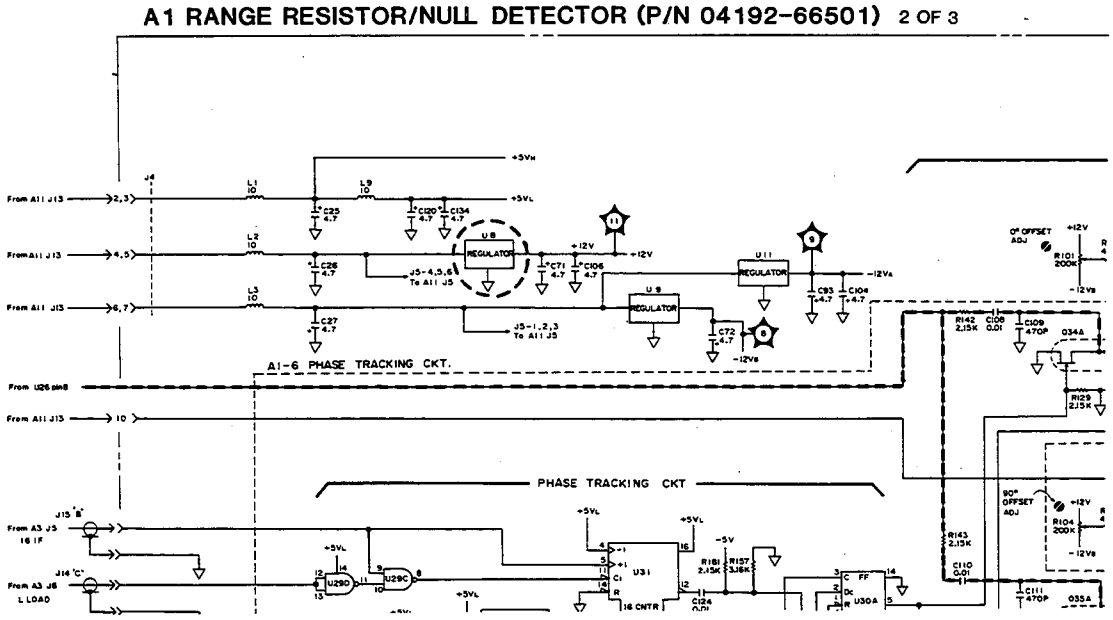

Page 8-91, Figure 8-49, A1 Range Resistor/Null Detector Board Assembly Schematic Diagram:

Change the diagram as shown below:

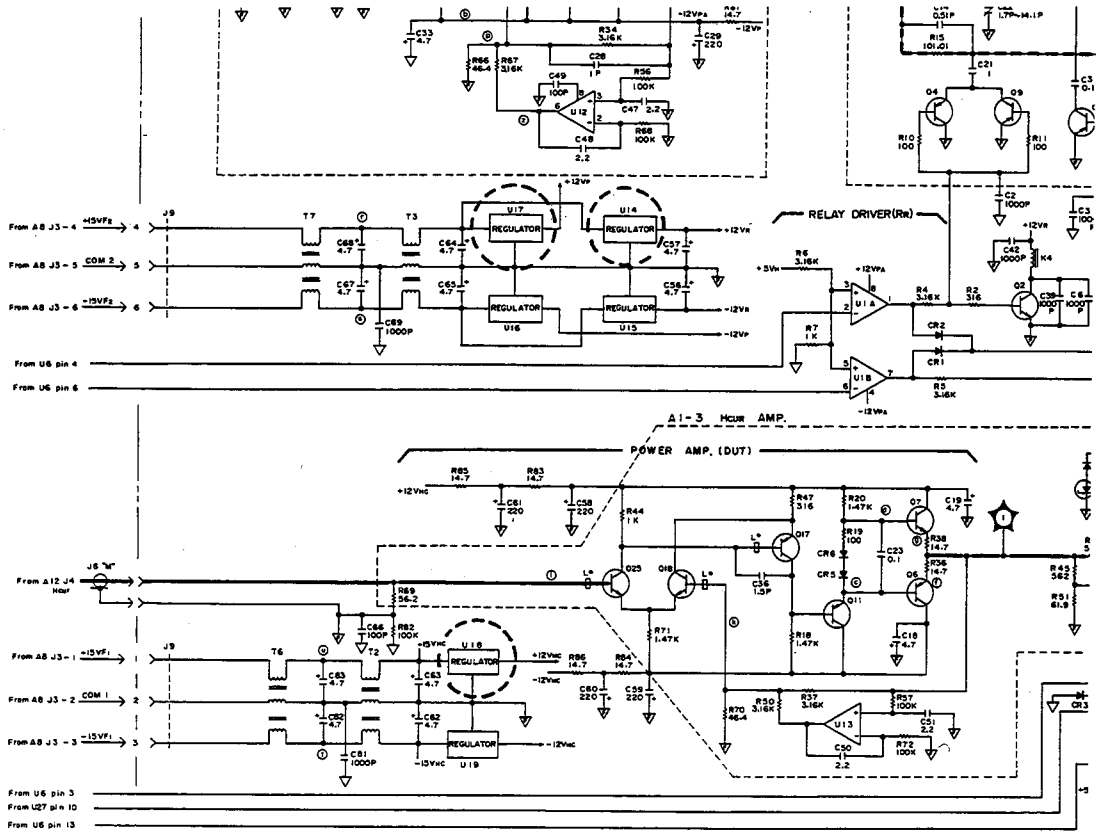


Page 8-97, Figure 8-55, A2 Phase Detector/A-D Converter Board Assembly Schematic Diagram:

Change the diagram as shown below:

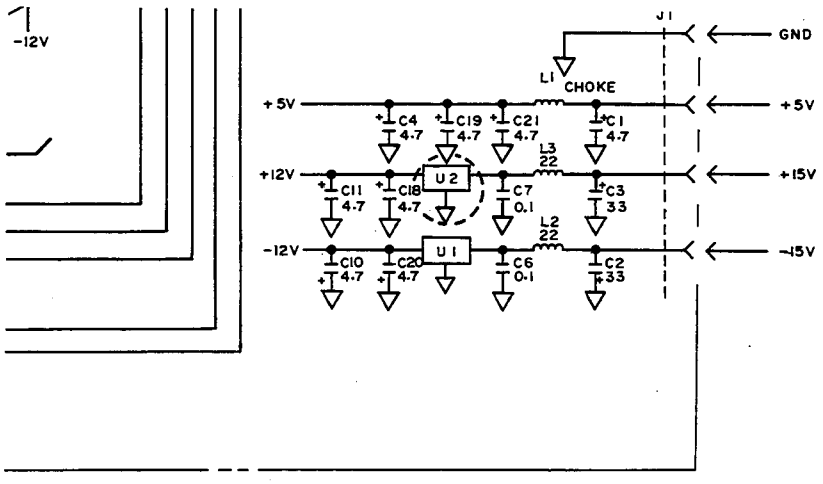

CHANGE 18

Page 6-28 and 6-31, Table 6-3 Replaceable Parts:
See Table 7-2, Parts Information.

Page 8-133, Figure 8-84, A8 Floating Power Supply/Bias Supply Board Assembly Schematic Diagram:
Change the diagram as shown below:

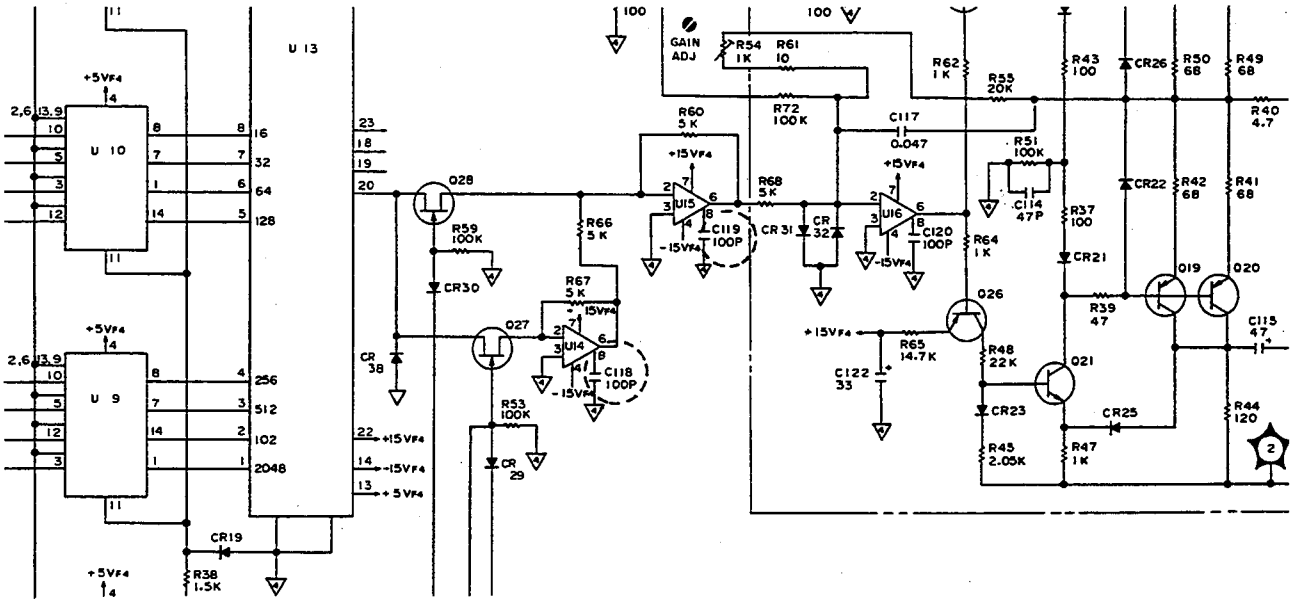


CHANGE 19

Page 6-17, Table 6-3, Replaceable Parts:
See Table 7-2, Parts Information.

Page 8-115, Figure 8-71, A4 Fractional N Loop Board Assembly Schematic Diagram:
Change the diagram as shown below:

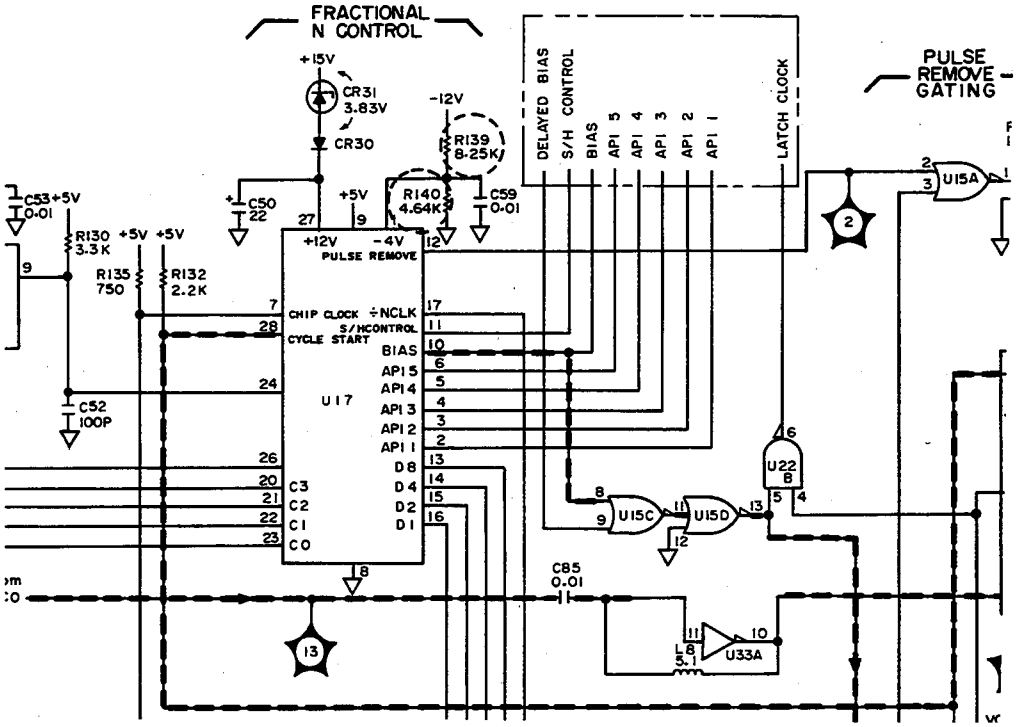


CHANGE 20

Page 6-21, Table 6-3, Replaceable Parts:
See Table 7-2, Parts Information.

Page 8-118, 8-120 and 8-122, Figure 8-74, A6 Microprocesser Digital Control Board Assembly Component Locations:

Add 24-pin IC sockets to the locations shown below:

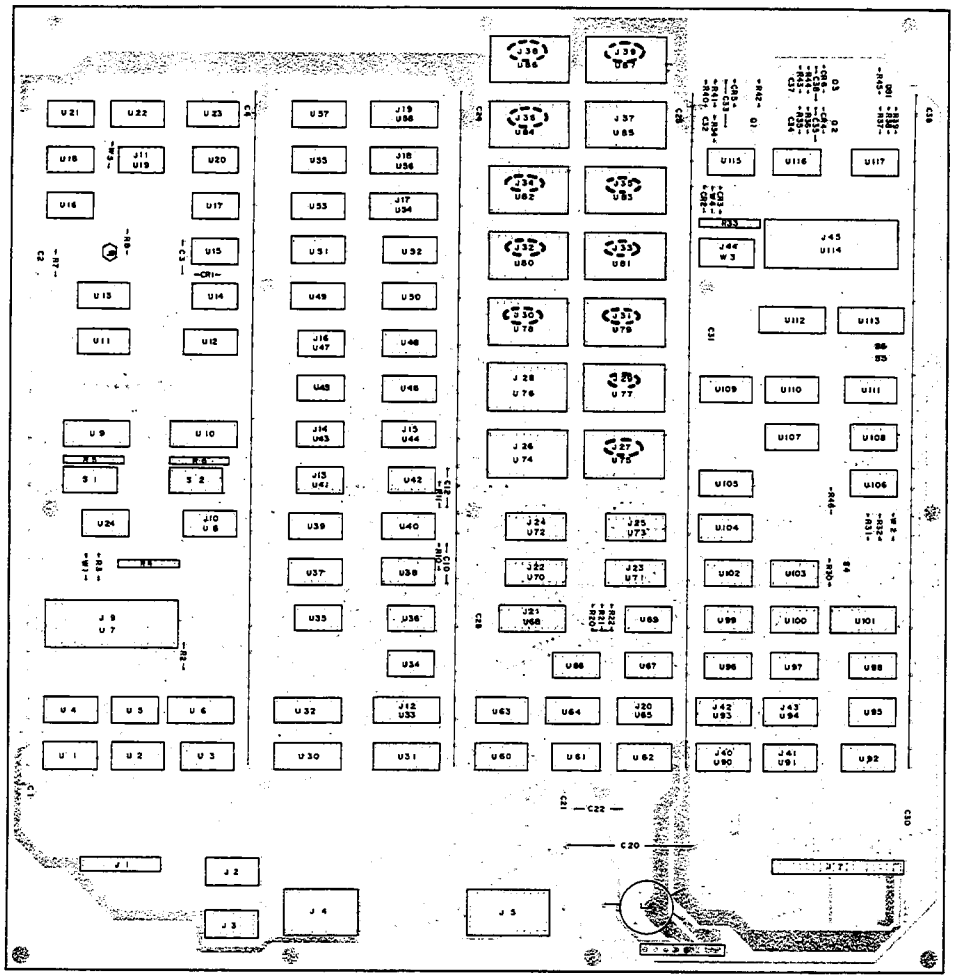

CHANGE 21

Page 8-127, Figure 8-80, A7 Power Supply Board and A10 Battery and Charger Board Assembly Schematic Diagram:

Change the diagram as shown below:

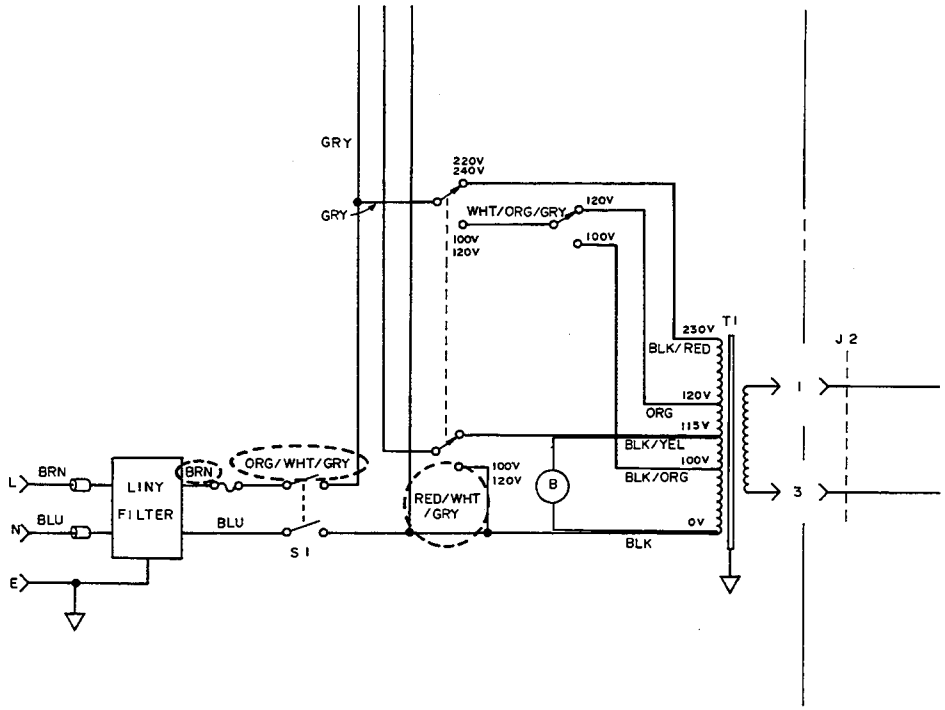

CHANGE 22

Page 5-21. Paragraph 5-39, A1 Lcur AMPLIFIER OUTPUT LEVEL ADJUSTMENT

Change the procedure to read:

a. Set the 4192A's controls as follows:

| | |
|---|---|
| SPOT FREQ | 13MHZ |
| OSC LEVEL | 70mV |
| Other Controls | Initial Settings |

b. through e.: no change

f. Reverse the setting of A1S1 bit 4 (MSB) and adjust A1R182 to set the waveform to 4.0 Vpp. Do not reset A1S1 bit 4 at this time.

g. and h.: no change

i. Reset A1S1 bit 4 to its previous setting and confirm that the waveform is 4.0 Vpp.

CHANGE 23

Page 6-5, 6-6, 6-7, and 6-34, Table 6-3. Replaceable Parts:
See Table 7-2. Parts Information.

Page 8-91, Figure 8-49. A1 Range Resistor/Null Detector Board Assembly Schematic Diagram (sheet 3 of 3):
Change the value of R73 and R54 to 464kΩ.

CHANGE 24

Page 6-12 and 6-15, Table 6-3. Replaceable Parts:
See Table 7-2. Parts Information.

CHANGE 25

Page 3-21, Paragraph 3-33:
Change the specifications for the rechargeable batteries to read as follows:

Operating time: 7500 hours (typical) after full charge.

Recharge time: Time required to fully recharge the batteries is 200 hours.

Life time: 5 years (at 25 ° C).

Page 6-32, Table 6-3. Replaceable Parts:
See Table 7-2. Parts Information.

CHANGE 26

Page 6-45, Figure 6-1:
See Table 7-2, Parts Information.

Page 6-46, Table 6-6. Parts Identification:
See Table 7-2. Parts Information.

CHANGE 27

Page 6-46, Table 6-6. Parts Identification:
See Table 7-2. Parts Information.

Table 7-2. Parts Information (Sheet 1 of 3)

| CHANGE | Page | Note | Reference Designation | HP Part Number | Description |
|---|---|---|---|---|---|
| 1 | 6-26 | C | A7R66 | 2100-3211 | RESISTOR-TRMR 1K 10% 1 TRN |
| | 6-28 | C | A8C71 | 0140-0194 | CAPACITOR-FXD 110pF |
| 2 | 6-4 | C | A1C135 | 0160-2204 | CAPACITOR-FXD 100pF |
| 3 and 8 | 6-14 | A | A4C26 | 0160-0127 | CAPACITOR-FXD 1µF 50VDC |
| | | C | A4C27 | 0160-4571 | CAPACITOR-FXD .1µF 50VDC |
| | | C | A4C28 | 0180-1746 | CAPACITOR-FXD 15µF 20VDC |
| | | A | A4C29 | 0180-1746 | CAPACITOR-FXD 15µF 20VDC |
| | | A | A4C54 | 0160-3847 | CAPACITOR-FXD .01µF 50VDC |
| | | A | A4C55 | 0180-0229 | CAPACITOR-FXD 33µF 10VDC |
| | | A | A4C70 | 0160-0127 | CAPACITOR-FXD 1µF 50VDC |
| | | D | A4C74 | 0180-1083 | CAPACITOR-FXD 33µF |
| | | D | A4C75 | 0180-1083 | |
| | | D | A4C76 | 0180-1083 | |
| | | D | A4C77 | 0180-1083 | |
| | | D | A4C78 | 0180-1083 | |
| | | D | A4C79 | 0180-1083 | |
| | | D | A4C80 | 0180-1050 | CAPACITOR-FXD 100µF |
| | | D | A4C81 | 0180-1085 | CAPACITOR-FXD 4.7µF |
| | | D | A4C82 | 0180-1050 | CAPACITOR-FXD 100µF |
| | | D | A4C83 | 0180-1085 | CAPACITOR-FXD 4.7µF |
| | | D | A4C84 | 0160-0127 | |
| | | D | A4C85 | 0160-4832 | |
| | 6-15 | A | A4CR22 | 1902-0041 | DIODE-ZNR 5.11V 5% |
| | | C | A4L7 | 9100-1788 | CHOKE-WIDE BAND ZMAX=600 |
| | | D | A4L9 | 9100-1788 | CHOKE-WIDE BAND ZMAX=600 |
| | | D | A4L10 | 9100-3139 | INDVCTOR 75µA 15% |
| | | A | A4Q24 | 1855-0082 | TRANSISTORJ-FET P-CHAN |
| | | A | A4Q34 | 1854-0215 | TRANSISTOR NPN |
| | 6-16 | C | A4R11 | 0698-3446 | RESISTOR 383 1% |
| | | C | A4R12 | 0757-1094 | RESISTOR 1.47K 1% |
| | | A | A4R43 | 0683-2205 | RESISTOR 22 5% |
| | 6-17 | C | A4R96 | 0757-0200 | RESISTOR 5.62K 1% |
| | 6-18 | A | A4U6 | 1826-0043 | IC OP AMP |
| | | A | A4U13 | 5080-3070 | IC DRUR TTL LS |
| | | A | A4W3 | 8159-0005 | WIRE 22AWG |
| 3 | 6-26 | C | A7R54 | 0683-2225 | RESISTOR 2.2K 5% |
| | 6-31 | C | A9C4 | 0160-3847 | CAPACITOR-FXD .01µF 50VDC |
| | | C | A9C5 | 0160-3847 | CAPACITOR-FXD .01µF 50VDC |
| | | C | A9C6 | 0160-3847 | CAPACITOR-FXD .01µF 50VDC |
| 3 and 8 | 6-11 | D | A3C80 | 0180-1050 | CAPACITOR-FXD 100µF |
| | 6-13 | C | A3R74 | 0698-3401 | RESISTOR 215 1% .5W |
| | | A | A3R87 | 0757-0401 | RESISTOR 100 1% |
| 4 | 6-30 | C | A8R54 | 2100-3212 | RESISTOR-TRMR 200 10% |
| | | C | A8R61 | 0698-3447 | RESISTOR 422 1% |
| 5 | 6-3 | C | A1C15 | 0160-2241 | CAPACITOR-FXD 2.2pF 500VDC |
| | | C | A1C16 | 0160-2265 | CAPACITOR-FXD 8.2pF 500VDC |
| | | C | A1C22 | 0121-0127 | CAPACITOR-V TRMR-AIR 1.5-4pF |
| 6 | 6-15 | D | A4J10 | 1200-0567 | SKT-IC 28-CONT |
| 8 | 6-14 | A | A4C71 | 0180-0374 | CAPACITOR-FXD 100µF 20V |
| | | A | A4C72 | 0180-0374 | CAPACITOR-FXD 100µF 20V |

A: Add D: Delet C: Change

Table 7-2. Parts Information (Sheet 2 of 3)

| CHANGE | Page | Note | Reference Designation | HP Part Number | Description |
|---|---|---|---|---|---|
| 9 | 6-28 | D | A8C123 | 0180-1052 | CAPACITOR-FXD 220µF 6.3V |
| | 6-29 | D | A8CR37 | 1902-3036 | DIODE-ZNR 3.16V 5% |
| | 6-30 | D | A8Q33 | 1854-0477 | TRANSISTOR NPN 2N2222A |
| | | D | A8Q34 | 1854-0477 | TRANSISTOR NPN 2N2222A |
| | | D | A8R77 | 0683-1015 | RESISTOR 100 5% .25W |
| | | D | A8R78 | 0683-1015 | RESISTOR 100 5% .25W |
| | | D | A8R79 | 0683-1025 | RESISTOR 1K 5% .25W |
| | | D | A8R80 | 0683-3835 | RESISTOR 33K 5% .25W |
| 10 | 6-15 | C | A4CR30 | 1902-3030 | DIODE-ZNR 3.01V 5% |
| | | D | A4CR31 | 1902-3059 | DIODE-ZNR 3.83V |
| 11 | 6-29 | D | A8CR38 | 1901-0050 | DIOD-SWITCHING |
| | | D | A8CR39 | 1901-0050 | DIODE-SWITCHING |
| 12 | 6-46 | C | 23 | 9100-0890 | TRANSFORMET |
| | | C | 24 | 04192-00204 | REAR PANEL |
| 13 | 6-8 | C | A1R182 | 2100-3353 | RESISTOR-TRMR 20K |
| | | C | A1R183 | 2100-3353 | RESISTOR-TRMR 20K |
| 15 | 6-28 | A | A8C118 | 0160-2204 | CAPACITOR-FXD 100pF |
| | | A | A8C119 | 0160-2204 | CAPACITOR-FXS 100pF |
| | 6-31 | C | A8U14 | 1826-0035 | IC OP AMP |
| | | C | A8U15 | 1826-0035 | IC OP AMP |
| 16 | 6-20 | A | A5 M/P | 1251-1998 | CONNECTOR-SGL CONT SKT |
| | | D | A5 M/P | 5040-3323 | INSULATOR |
| 17 | 6-5 | D | A1CR39 | 1902-3136 | DIODE-ZNR 8.06V 12.5MA DO-35 |
| | | D | A1CR40 | 1902-3136 | DIODE-ZNR 8.06V 12.5MA DO-35 |
| | | D | A1CR41 | 1902-3136 | DIODE-ZNR 8.06V 12.5MA DO-35 |
| | | D | A1CR42 | 1902-3136 | DIODE-ZNR 8.06V 12.5MA DO-35 |
| | 6-8 | D | A1R184 | 0683-3315 | RESISTOR 330Ω 5% .25W TC=0-400 |
| | | D | A1R185 | 0683-3315 | RESISTOR 330Ω 5% .25W TC=0-400 |
| | | D | A1R186 | 0683-3315 | RESISTOR 330Ω 5% .25W TC=0-400 |
| | | D | A1R187 | 0683-3315 | RESISTOR 330Ω 5% .25W TC=0-400 |
| | 6-9 | D | A2CR7 | 1902-3136 | DIODE-ZNR 8.06V 12.5MA DO35 |
| | 6-10 | D | A2R43 | 0683-3315 | RESISTOR 330% 5% .25W TC=0-400 |
| | 6-28 | A | A8C118 | 0160-2204 | CAPACIOTO-FXD 100pF ±5% 330VDC MICA |
| | | A | A8C119 | 0160-2204 | CAPACITOR-FXD 100pF ±5% 300VDC MICA |
| 18 | 6-31 | C | A8U14 | 1826-0035 | IC OP AMP LOW-DRIFT TO-99 PKG |
| | | C | A8U15 | 1826-0035 | IC OP AMP LOW-DRIFT TO-99 PKG |
| | 6-17 | C | A4R139 | 0757-0441 | RESISTOR 8.25K 1% .125W |
| | | C | A4R140 | 0698-3155 | RESISTOR 4.64K 1% .125W |

A: Add D: Delete C: Change

Table 7-2. Parts Information (Sheet 3 of 3)

| CHANGE | Page | Note | Reference Designation | HP Part Number | Description |
|---|---|---|---|---|---|
| 20 | 6-21 | A | A6J27 | 1200-0541 | SOCKET-IC 24-CONT DIP |
| | | A | A6J28 | 1200-0541 | SOCKET-IC 24-CONT DIP |
| | | A | A6J29 | 1200-0541 | SOCKET-IC 24-CONT DIP |
| | | A | A6J30 | 1200-0541 | SOCKET-IC 24-CONT DIP |
| | | A | A6J31 | 1200-0541 | SOCKET-IC 24-CONT DIP |
| | | A | A6J32 | 1200-0541 | SOCKET-IC 24-CONT DIP |
| | | A | A6J33 | 1200-0541 | SOCKET-IC 24-CONT DIP |
| | | A | A6J34 | 1200-0541 | SOCKET-IC 24-CONT DIP |
| | | A | A6J35 | 1200-0541 | SOCKET-IC 24-CONT DIP |
| | | A | A6J36 | 1200-0541 | SOCKET-IC 24-CONT DIP |
| | | A | A6J37 | 1200-0541 | SOCKET-IC 24-CONT DIP |
| | | A | A6J38 | 1200-0541 | SOCKET-IC 24-CONT DIP |
| | | A | A6J39 | 1200-0541 | SOCKET-IC 24-CONT DIP |
| 23 | 6-5 | C | A1Q19 | 1854-0129 | Transistor-NPN 25C 1636 |
| | 6-6 | C | A1Q26 | 1854-0129 | Transistor-NPN 25C 1636 |
| | 6-7 | C | A1R54 | 0698-3260 | Resistor 464k 1% 125W |
| | | C | A1R73 | 0698-3260 | Resistor 464k 1% 125W |
| | 6-34 | C | A11Q8 | 1854-0129 | Transistor-NPN 2SC 1636 |
| | | C | A11Q9 | 1854-0129 | Transistor-NPN 2SC 1636 |
| | | C | A11Q10 | 1854-0129 | Transistor-NPN 2SC 1636 |
| 24 | 6-12 | C | A3Q6 | 1855-0119 | Transistor-FET 2SK 43 |
| | 6-15 | C | A4Q2 | 1855-0122 | Transistor-FET 2SK 43-1 |
| | | C | A4Q4 | 1855-0119 | Transistor-FET 2SK 43 |
| | | C | A4Q5 | 1855-0119 | Transistor-FET 2SK 43 |
| 25 | 6-32 | C | A10BT1 | 1420-0126 | Battery-NI-CD |
| | | C | A10BT2 | 1420-0126 | Battery-NI-CD |
| | | C | A10R1 | 0683-1025 | Resistor 1k 5% 25W |
| 26 | 6-45 | C | 1 | 5060-9836 | TOP COVER |
| | | C | 4 | 5060-9848 | BOTTOM COVER |
| | | C | 8 | 5040-7219 | STRAP HANDLE CAP (FRONT) |
| | | C | 10 | 5040-7220 | STRAP HANDLE CAP (REAR) |
| | | C | 11 | 2680-0172 | SCREW |
| | | C | 13 | 2360-0195 | SCREW |
| | 6-46 | C | 1 | 5040-7219 | STRAP HANDLE CAP (FRONT) |
| | | C | 2 | 2680-0172 | SCREW |
| | | C | 5 | 2510-0192 | SCREW |
| | | C | 6 | 5020-8838 | STRUT |
| | | C | 12 | 5040-7220 | STRAP HANDLE CAP (REAR) |
| | | C | 27 | 5020-8808 | REAR FRAME |
| | | C | 36 | 2360-0333 | SCREW |
| | | C | 37 | 5020-8807 | FRONT FRAME |
| | | C | 38 | 04192-00203 | SUB PANEL |
| 27 | 6-46 | C | 5 | 0515-1331 | SCREW |

A: ADD D: DELETE C: CHANGE

# SECTION VIII
# SERVICE

## 8-1. INTRODUCTION

8-2. This section provides the information and instructions required to service the Model 4192A LF Impedance Analyzer. Included are the Theory of Operation and Troubleshooting Guide with Circuit Schematics. The Theory of Operation describes fundamental principles and circuit operating theory of the 4192A with block diagrams. Circuit schematics, locator illustrations, troubleshooting guide, circuit analysis and other technical data necessary for repairs are integrated into the service sheet foldouts. An illustration of the instrument interior is shown in Figure 8-40.

## 8-3. SAFETY CONSIDERATIONS

8-4. This section contains warnings and cautions that must be followed for your protection and to avoid damage to the equipment.

WARNING

MAINTENANCE DESCRIBED HEREIN IS PERFORMED WITH POWER SUPPLIED TO THE INSTRUMENT AND PROTECTIVE COVERS REMOVED. SUCH MAINTENANCE SHOULD BE PERFORMED ONLY BY SERVICE-TRAINED PERSONNEL AWARE OF THE HAZARDS INVOLVED (FOR EXAMPLE, FIRE AND ELECTRICAL SHOCK). WHERE MAINTENANCE CAN BE PERFORMED WITHOUT POWER APPLIED, THE POWER SHOULD BE REMOVED. BEFORE ANY REPAIR IS COMPLETED, ENSURE THAT ALL SAFETY FEATURES ARE INTACT AND FUNCTIONING AND THAT ALL NECESSARY PARTS ARE CONNECTED TO THEIR MEANS OF PROTECTIVE GROUNDING.

## 8-5. THEORY OF OPERATION

8-6. The theory of operation discussion is organized into three sections: basic theory, block diagram discussion, and circuit analysis. The basic theory, beginning with paragraph 8-13, explains the concepts and fundamental theory of the 4192A instrument technique adapted for accurately measuring the DUT and for fully achieving automated measurement performance. The block diagram discussion describes the overall circuit operating theory of the 4192A with block-to-block signal flow. Included are block and timing diagrams. The circuit analysis provides a detailed description of how the circuit on each board functions. For reference convenience when servicing the instrument, a circuit description is included on the service sheets.

## 8-7. RECOMMENDED TEST EQUIPMENT

8-8. The test equipment required to perform operations outlined in this section is listed in Table 4-1. The table includes type of instrument required, critical specifications, use, and recommended model. If the recommended model is not available, equipment which meets or exceeds the critical specifications listed may be substituted.

## 8-9. TROUBLESHOOTING

8-10. This troubleshooting guide provides instructions and information for locating a faulty circuit component. All instructions consider the safety of service personnel performing the procedures. These diagnostic guides are in the form of step-by-step procedures with flow diagrams. The board level troubleshooting diagrams are used to isolate failures to an individual malfunctioning circuit board assembly. The guides for locating a defective component are given on the individual board service-sheets and integrate service support data — test point locations, waveform illustrations, voltage data, timing diagrams, and other technical information in addition to providing schematic diagrams for each board. To facilitate easy troubleshooting of the 4192A Digital Section, the troubleshooting guide for the logic circuit employs signature analysis, incorporating the concept of data stream analysis. A guideline to signature analysis is provided in Figure 8-34.

## 8-11. REPAIR

8-12. Repair explanations tell how to replace defective circuit components. The recommended replacement procedures for components and parts which require special repair, replacement tools, or test equipment should be observed. Correct disassembly and the exchange procedures for such special parts are outlined in Paragraphs 8-115 through 8-123. To prevent damage resulting from improper repair procedure, refer to the appropriate manual section before proceeding with repair.

## 8-13. BASIC OPERATING THEORY

8-14. The descriptions starting with this paragraph explain the measurement principles of the 4192A LF Impedance Analyzer. The design goals of the 4192A are accomplished using state-of-the-art technologies found in existing automatic LCR measurement instruments and high grade signal generators. It is, therefore, important to be familiar with these basic concepts and operating principles before reading the circuit operating theory of the 4192A. The basic operating theory described in the following paragraphs helps you understand the circuit operating theory of the 4192A, in detail.

### 8-15. Auto-Balance Bridge Measurement Circuit

8-16. The impedance measurement function of the 4192A is based on the vector-voltage-current ratio measurement method. In this method, the impedance (or admittance) of the DUT is determined by measuring the vector ratio between the applied test signal voltage and the current flowing through the DUT. In low frequency applications of the vector-voltage-current method, a voltage-to-current (I-V) converter amplifier which has a range resistor feedback circuit is employed to detect the DUT vector current. See Figure 8-1. The I-V converter causes a current to flow through the range resistor equal to the current through the DUT. Thus, the output voltage of the I-V converter is equal to the product of DUT current and the range resistor value. Accordingly, the DUT impedance is determined from the test signal voltage, the output voltage of the I-V converter, and the range resistor value. The potential at the LOW terminal is approximately zero (virtual ground at the feedback node); therefore, the range resistor value has no effect on the current through the DUT. Additionally, the actual test signal level applied to the DUT is constant, regardless of the range resistor value. The frequency bandwidth of the I-V converter amplifier, where the flat gain-phase characteristic is achieved, determines the frequency limitations of this method. Because of the difficulty involved in achieving a broad bandwidth for an amplifier with a high open-loop gain, this method does not lend itself well to high frequency impedance measurements.

8-17. The auto-balance bridge circuit employed in the 4192A permits the vector voltage across the range resistor to be accurately proportional to DUT current, from low frequencies up to the 10MHz region. Thereby, it is possible to extend the useable range of the vector-voltage-current-ratio (VVCR) measurement method to frequencies up to 13MHz. It is possible to explain the principle of the auto-balance bridge in two or three different ways regarding the basic concepts. To simplify the discussion, consider the auto-balance bridge in terms of the two-oscillator model illustrated in Figure 8-2.

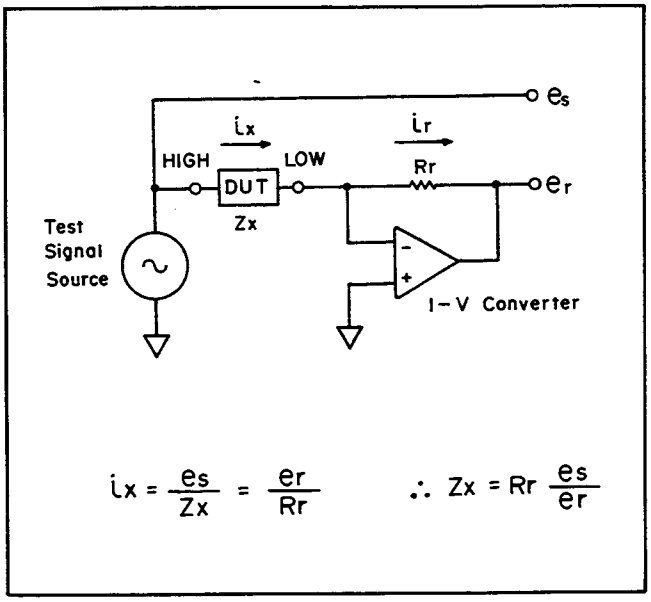


Figure 8-1. Vector-Voltage-Current-Ratio Measurement Method Using the Range Resistor Amplifier.

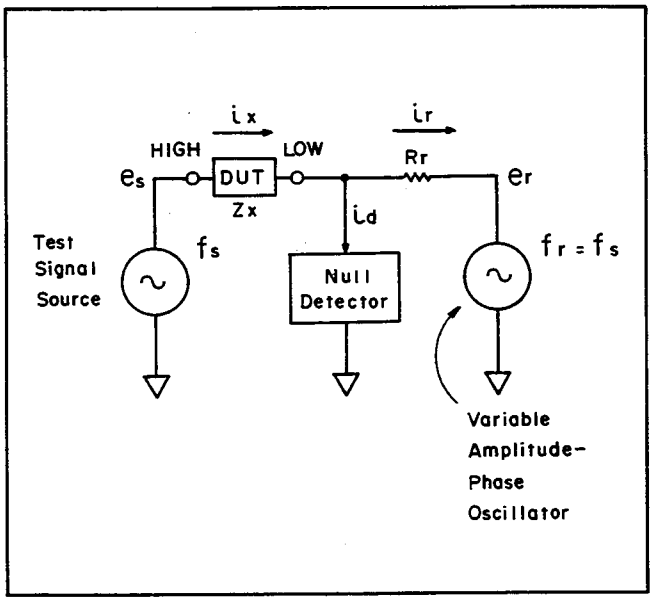


Figure 8-2. Two Oscillator Model of the Auto-Balance Bridge.

8-18. Figure 8-2 shows the basic configuration of the auto-balance bridge circuit. The test signal source applies a test signal, **e**s, to the DUT and causes a current, $i_x$, to flow through the DUT. This yields the current, $i_r$, which flows through the range resistor, Rr. The Variable Amplitude-Phase Oscillator applies a signal, **e**r, of the same frequency as the test signal to the range resistor. Currents $i_x$ and $i_r$ can be balanced by controlling the output of the Variable Amplitude-Phase Oscillator. The Null Detector detects the difference, $i_d$, between $i_x$ and $i_r$ (that is, $i_d = i_x - i_r$). When the Variable Amplitude-Phase Oscillator is adjusted for $i_d = 0$, the impedance, Zx, of the DUT is calculated from the vector voltages, **e**s and **e**r, as follows:

$$i_x = \frac{\mathbf{e}_s}{Z_x}, \quad i_r = \frac{\mathbf{e}_r}{R_r}, \quad i_x = i_r$$

Thus, $$\frac{\mathbf{e}_s}{Z_x} = \frac{\mathbf{e}_r}{R_r} \qquad Z_x = R_r \frac{\mathbf{e}_s}{\mathbf{e}_r}$$

Accordingly, the impedance of the DUT is known by measuring the ratio between the vector voltages, **e**s and **e**r.

8-19. The unbalance current, $i_d$, has the information required to balance the bridge. Thus, the feedback control of the Variable Amplitude-Phase Oscillator from the null detector output automatically balances the bridge. See Figure 8-3. Here, the balance stability is related to the noise level of the **e**r signal. Especially, unavoidable phase noise (FM noise) generated by the Variable Amplitude-Phase Oscillator, referenced to the phase of the test signal, will cause some instability in the balancing of the bridge.

8-20. To improve stability, the **e**r signal is controlled by a Modulator circuit in place of the Variable Amplitude-Phase Oscillator. The test signal is routed to the Modulator where it is transformed into the **e**r signal controlled by the output from the null detector. See Figure 8-4. Because the frequency of the modulator output, **e**r, is exactly equal to that of the test signal (even if the test frequency fluctuates), the balance instability problem, inherent in the two-oscillator method, is eliminated. To produce the **e**r signal, the Modulator varies the amplitude and phase of the **e**s input signal in response to the null detector output. In comparison with the range resistor amplifier method, the combination of the Null Detector and the Modulator may be considered an ideal feedback amplifier with a realized 13MHz bandwidth. A brief description of the basic Modulator circuit is provided in Figure 8-5.

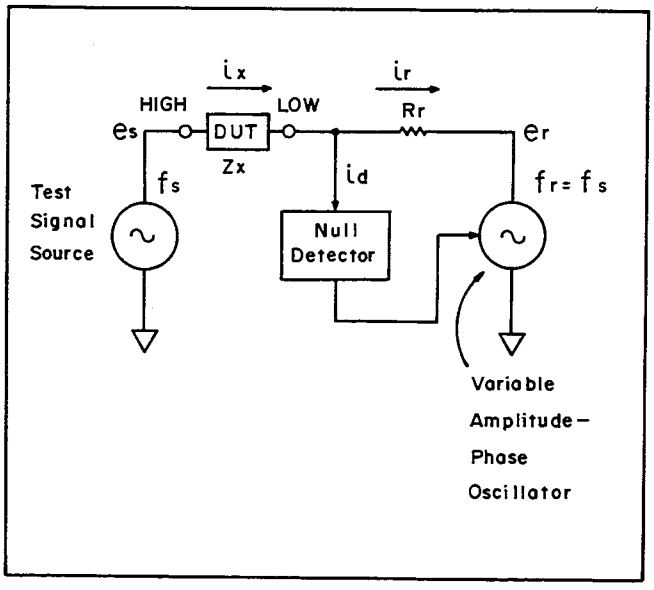


Figure 8-3. Principle of the Auto-Balance Control.

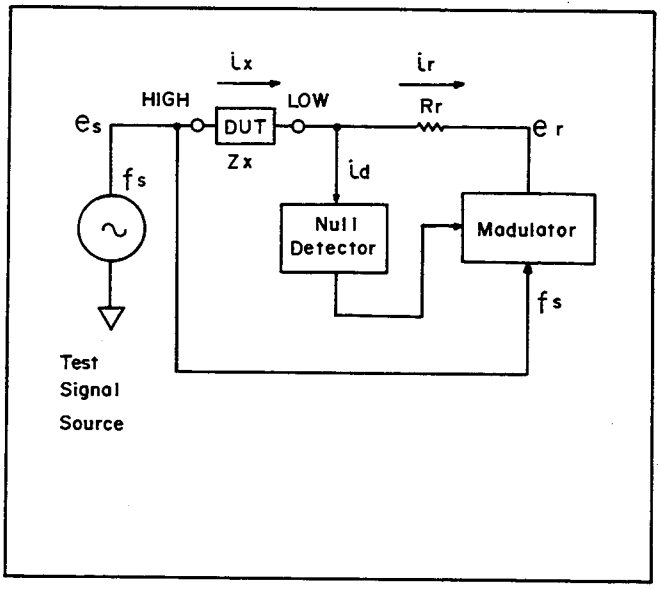


Figure 8-4. Actual Auto-Balance Bridge Circuit.

## MODULATOR CIRCUIT OPERATING PRINCIPLE

The Modulator of the auto-balance bridge operates to develop the vector signal of the range resistor current required to balance it to DUT current. Figure A shows the basic circuit configuration of the Modulator. When the Bridge circuit is unbalanced, the Null Detector picks up the unbalance current through the UNKNOWN "L" (Lpot) terminal. The null detector output vector indicates how the bridge is unbalanced for the real and imaginary vector components of the range resistor current (or DUT current). To control the Modulator according to the vector information of the detected unbalance current, the null detector output is phase detected for its orthogonal phase components. The positive or negative dc levels of the phase detector outputs are proportional to the magnitudes of these phase components. Reverse-phase components yield reverse-polarity voltage outputs from the phase detectors. The vector modulators vary the amplitudes of the four phase orthogonal vector signals, which are produced from test frequency input signal, in response to the null detector output vector components. The 0°/180° vector modulator provides an amplitude-controlled output which is in-phase with the test frequency input when the 0° phase detector output is a positive voltage and, conversely, provides a reverse phase output for a negative phase detector output voltage. Thus, the 0°/180° vector modulator output signal is represented by a vector on the real axis of the coordinates as shown in Figure B. The 90°/-90° vector modulator operates similarly to the 0°/180° vector modulator with respect to the 90° phase shifted input signal. The 90°/-90° vector modulator output signal is represented by a vector on the imaginary axis (see Figure B). In theory, it is possible to make all the required vectors by adding orthogonal vectors. As a result of this vector modulation, the magnitudes of the real and imaginary vector components of the null detector output are transferred to the orthogonal vectors of the vector modulator outputs. The summing amplifier

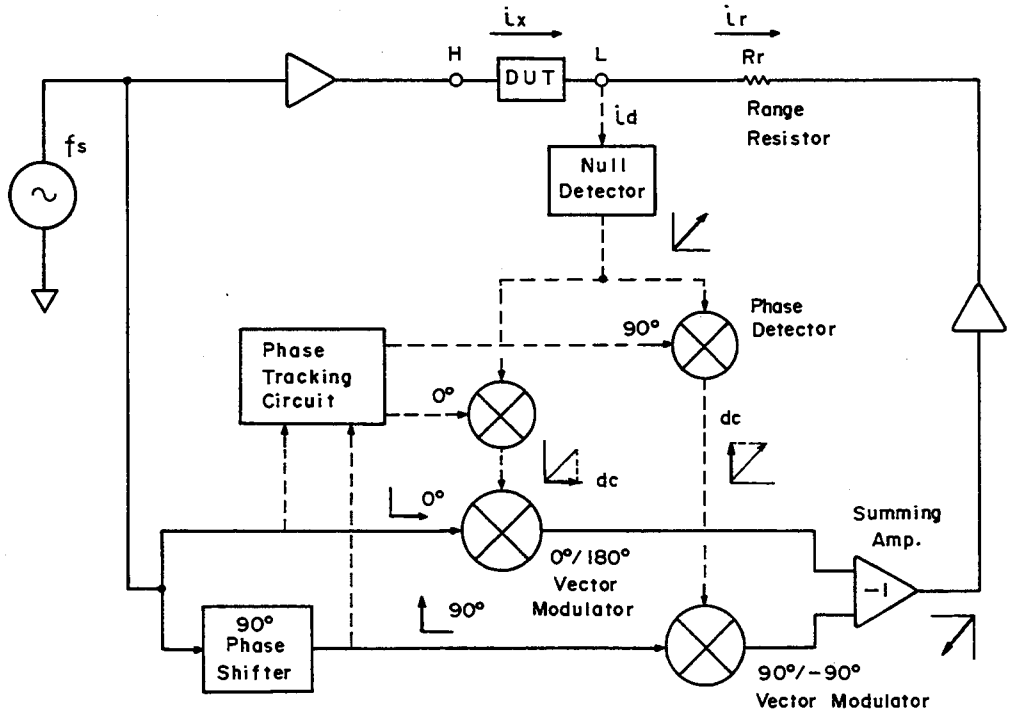


Figure A. Modulator Operating Principle

Figure 8-5. Principle of The Modulator.

sums the signals output from the 0°/180° and 90°/-90° vector modulators and, simultaneously, reverses the phase of the resultant vector signal (the summing amplifier performs an inverting amplification). Consequently, the summing amplifier output, **e**r, is a reverse directional vector for the unbalance current. The **e**r signal responds to the unbalance current so as to suppress an increase in the unbalance current. Thus, the unbalance current approaches zero. Because the **e**r signal is controlled with respect to the individual magnitudes of the real and imaginary components of the unbalance current, the bridge can reach accurate balance even if the balance control loop (the Null Detector and the Modulator circuits) has a phase error related to frequency.

If the phase shift in the balance control loop is so large that the bridge cannot be automatically balanced, the phase characteristic of the balance control loop can be compensated by properly changing the phase of both the 0° and 90° reference phase signals for the phase detectors (in reference to the test frequency signal) maintaining their 90° phase relationship. The phase tracking circuit shifts the reference phases depending on the frequency and ensures the bridge being automatically balanced over a broad frequency range.

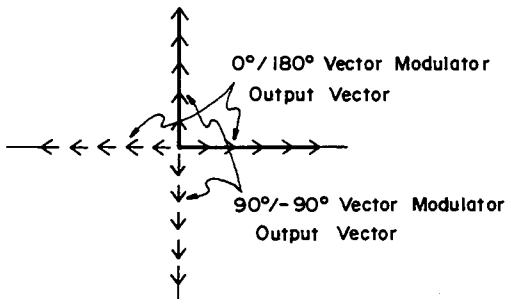


Figure B. Vector Representation of the Vector Modulator Outputs.

8-21. Vector Voltage Ratio Detector

8-22. The Vector Voltage Ratio Detector (VRD) detects the individual real and imaginary vector components of the two input vector signals—the test signal applied to the DUT and the voltage across the range resistor—and provides the A-D conversion outputs which represent the magnitudes of the four vector components. Detection of the vector component voltages is performed through three major processes: 1) Signal selection in the process amplifier, 2) phase detection, and 3) A-D conversion. The basic theory of the vector voltage ratio measurement is described as follows.

8-23. When the bridge is balanced, the impedance, Zx, (or admittance Yx) of the DUT, the test signal applied to the DUT, and the voltage across the range resistor are related to each other by the equation:

$$Zx = Rr \frac{\dot{e}s}{\dot{e}r}$$

or

$$Yx = \frac{1}{Rr} \frac{\dot{e}r}{\dot{e}s}$$

where, Rr is range resistor value,
$\dot{e}s$ is the voltage applied to the DUT (that is, the test signal voltage),
$\dot{e}r$ is voltage across the range resistor.

Figure 8-6 shows the basic circuit configuration of the VRD section. For accurate measurement of the vector voltages, the Process Amplifier detects the $\dot{e}s$ and $\dot{e}r$ signals with differential inputs. The Process Amplifier alternately selects and sequentially feeds the $\dot{e}s$ and $\dot{e}r$ signals to the Phase Detector. To derive the vector ratio of the $\dot{e}s$ and $\dot{e}r$ signals, the Phase Detector separates then into their orthogonal phase components using a set of detection phase signals which are exactly 90 degrees out of phase with each other. Figure 8-7 is a graphic representation of the relationship between the measurement signals ($\dot{e}s$ and $\dot{e}r$) and the detection phase signals ($V_{D1}$ and $V_{D2}$). With these detection phases, the $\dot{e}s$ and $\dot{e}r$ signals are divided into the phase components $\dot{e}a$, $\dot{e}b$, $\dot{e}c$, and $\dot{e}d$. The impedance or admittance value of the DUT is calculated from the four phase components in accordance with the following equations:

$$Zx = Rr \frac{\dot{e}s}{\dot{e}r} = Rr \frac{\dot{e}c + j\dot{e}d}{\dot{e}a + j\dot{e}b}$$

$$= Rr \frac{\dot{e}a\dot{e}c + \dot{e}b\dot{e}d + j(\dot{e}a\dot{e}d - \dot{e}b\dot{e}c)}{\dot{e}a^2 + \dot{e}b^2}$$

$$Yx = \frac{1}{Rr} \frac{\dot{e}r}{\dot{e}s} = \frac{1}{Rr} \frac{\dot{e}a + j\dot{e}b}{\dot{e}c + j\dot{e}d}$$

$$= \frac{1}{Rr} \frac{\dot{e}a\dot{e}c + \dot{e}b\dot{e}d + j(\dot{e}b\dot{e}c - \dot{e}a\dot{e}d)}{\dot{e}c^2 + \dot{e}d^2}$$

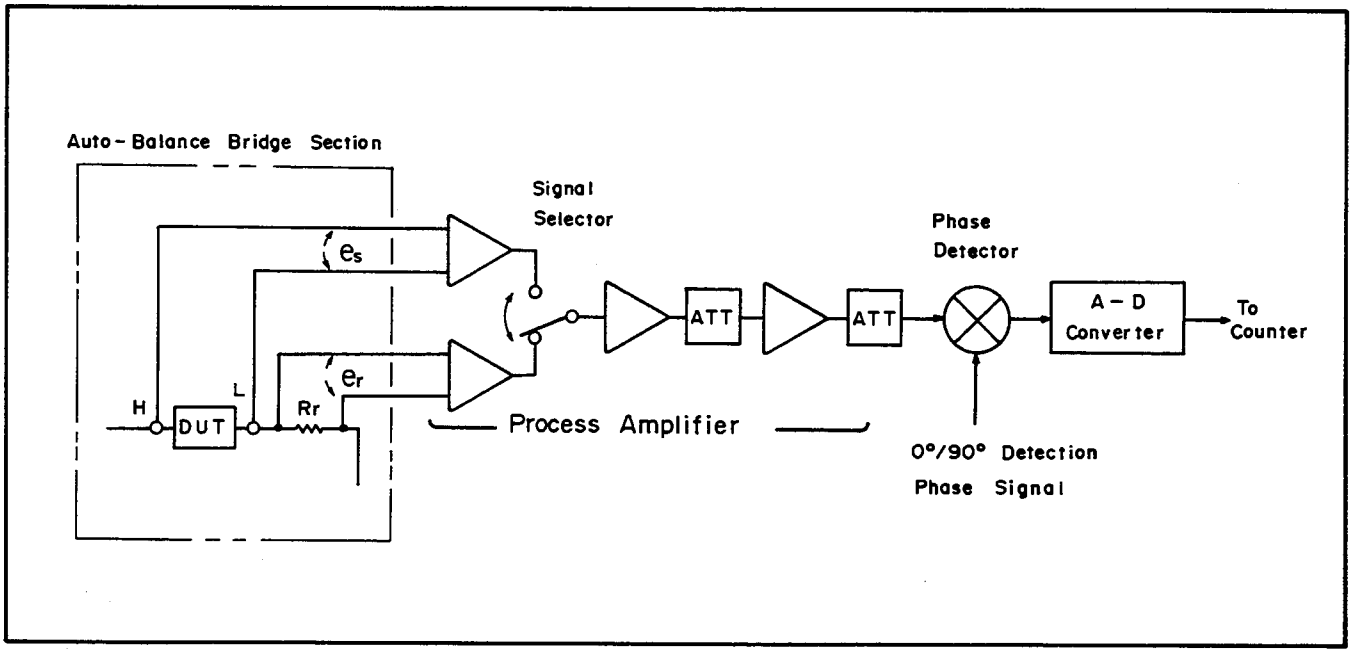


Figure 8-6. Vector Voltage Ratio Detector Basic Block Diagram.

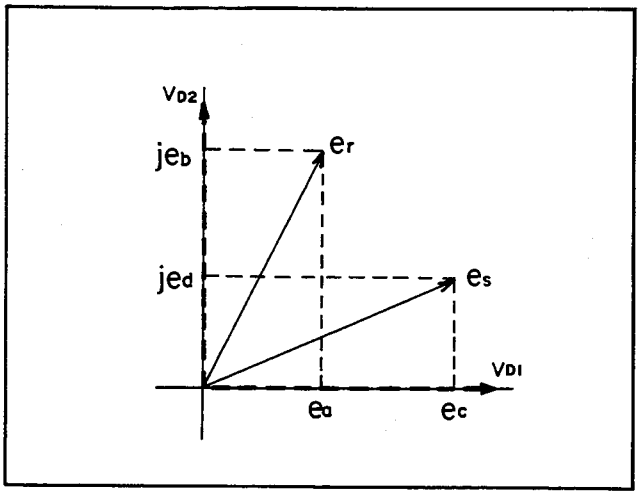


Figure 8-7. Phase Detection Vector Diagram.

Note

In the basic vector ratio detection of low-frequency impedance measuring instruments, either the **e**s or **e**r signal is separated into orthogonal vector components using a detection phase signal which is referenced to the phase of the other measurement signal (**e**r or **e**s). For example, the **e**s signal is taken as the reference for the phase angle of the **e**r signal and, the **e**r signal is divided into its real and imaginary components :

$$\mathbf{e}_r = \mathbf{e}_a + j\mathbf{e}_b$$

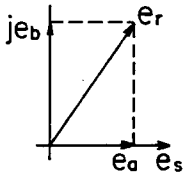


The **e**a and **e**b vector components are obtained by using detection phase signals which are in-phase or 90 ° out of phase with the **e**s signal. The vector ratios **e**a/**e**s and **e**b/**e**s represent the real and imaginary components of the DUT admittance; that is, the conductance and susceptance values, respectively. In a typical voltage ratio measurement which uses a dual slope integration technique, an integrator charges and discharges with the **e**a (or **e**b) and **e**s signals as illustrated below:

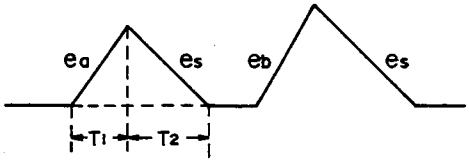


T1 : Constant charge period by **e**a signal

T2 : Discharge period by **e**s signal

The charge and discharge relationship is represented by the following equations:

$$k_1\mathbf{e}_1T_1 + k_2\mathbf{e}_2T_2 = 0$$

$$k\frac{\mathbf{e}_a}{\mathbf{e}_s} = \frac{T_2}{T_1} \propto Gx \quad (k = \text{constant})$$

As the charge time T1 is fixed, the **e**a/**e**s value (conductance) can be derived by measuring time T2. Since the propagation delays in the amplifiers, lines, and other circuits related to the phase detection cause a slight phase shift in the detection phase signal at high frequencies, this method cannot avoid an increase in vector ratio measurement error at high frequencies.

In this four component vector detection method for the **e**s and **e**r signals, the calculated Zx and Yx values are constant for rotation of the coordinate axis around the origin. Therefore, the phase relationships of the detection phase signals and the measurement signals have no effect on the calculation results if the relative phase angle of the detection phase signals is exactly 90 degrees.

Since any possible phase shift in the circuits rotates both the $V_{D1}$ and $V_{D2}$ detection phases by the same angle, an exact orthogonal phase relationship is maintained. Resistance and reactance (conductance and susceptance) values of the DUT are calculated as follows :

$$Rx = Zx|\text{real} = Rr\,\frac{\mathbf{e}_a\mathbf{e}_c + \mathbf{e}_b\mathbf{e}_d}{\mathbf{e}_a^2 + \mathbf{e}_b^2}$$

$$Xx = Zx|\text{imaginary} = Rr\,\frac{\mathbf{e}_a\mathbf{e}_d - \mathbf{e}_b\mathbf{e}_c}{\mathbf{e}_a^2 + \mathbf{e}_b^2}$$

$$Gx = Yx|\text{real} = \frac{1}{Rr}\,\frac{\mathbf{e}_a\mathbf{e}_c + \mathbf{e}_b\mathbf{e}_d}{\mathbf{e}_c^2 + \mathbf{e}_d^2}$$

$$Bx = Yx|\text{imaginary} = \frac{1}{Rr}\,\frac{\mathbf{e}_b\mathbf{e}_c - \mathbf{e}_a\mathbf{e}_d}{\mathbf{e}_c^2 + \mathbf{e}_d^2}$$

8-24. To measure the magnitude of each vector component (**e**a, **e**b, **e**c, and **e**d), the phase-detected vector voltages are sequentially converted into time periods. The A-D converter performs this conversion in four cycles (one cycle for each vector component) per DUT measurement as follows:

In the first conversion cycle, for example, the **e**c signal charges an integrator for a constant time Tl. Then, the integrator is discharged with a dc reference voltage (Es or -Es) until the decay slope of the output reaches zero level. Because the amount of the charge and discharge quantities is zero, relation between the integrator input voltages and time periods is:

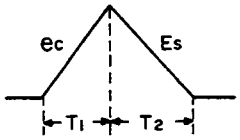


$$k_1 \mathbf{e}_c T_1 = k_2 E_s T_2$$

$$\mathbf{e}_c = k E_s \frac{T_2}{T_1}, \quad E_c \propto T_2$$

where, constant k is the product of (process amplifier gain) x (phase detector efficiency) x (integrator time constant). The magnitude of **e**c is known by measuring time T2. The other vector components are measured in the same manner.

The timing of the vector voltage ratio detector input/output signals is illustrated in Figure 8-8. To facilitate understanding the VRD operating sequence, Figure 8-8 shows the A-D converter output in the form of the dual slope integration method. Actual waveform of the multi-slope A-D converter employed in the 4192A is different from the figure, but follows the same vector component measurement sequence.

8-25. The A-D conversion sequence includes an auto offset cycle to eliminate the effects of residual dc offset voltages in the VRD section. The auto offset cycle precedes the four vector component measurement cycles each time a DUT measurement is taken. During the offset measurement period, the process amplifier's (**e**s and **e**r) signal selector switches are opened to accept no input. The A-D converter yields an output proportional to the comprehensive residual offset voltage of the Phase Detector and the A-D converter itself.

The measured dc offset voltage, Eo, is arithmetically subtracted from each of the measured vector component voltages as:

$$ea' = ea - Eo$$
$$eb' = eb - Eo$$
$$ec' = ec - Eo$$
$$ed' = ed - Eo$$

where the prime mark (') indicates compensated values.

8-26. The basic measurement parameter of the 4192A differs depending on the impedance of the DUT. When the DUT's impedance value is measured on a range below 100Ω, the 4192A basically calculates the vector impedance component values Rx and Xx. For DUTs which have higher impedance values, the 4192A calculates the vector admittance component values Gx and Bx. Other measurement parameter values are subsequently calculated from the measured Rx and Xx (Gx and Bx) values using the stored parameter conversion formulas.

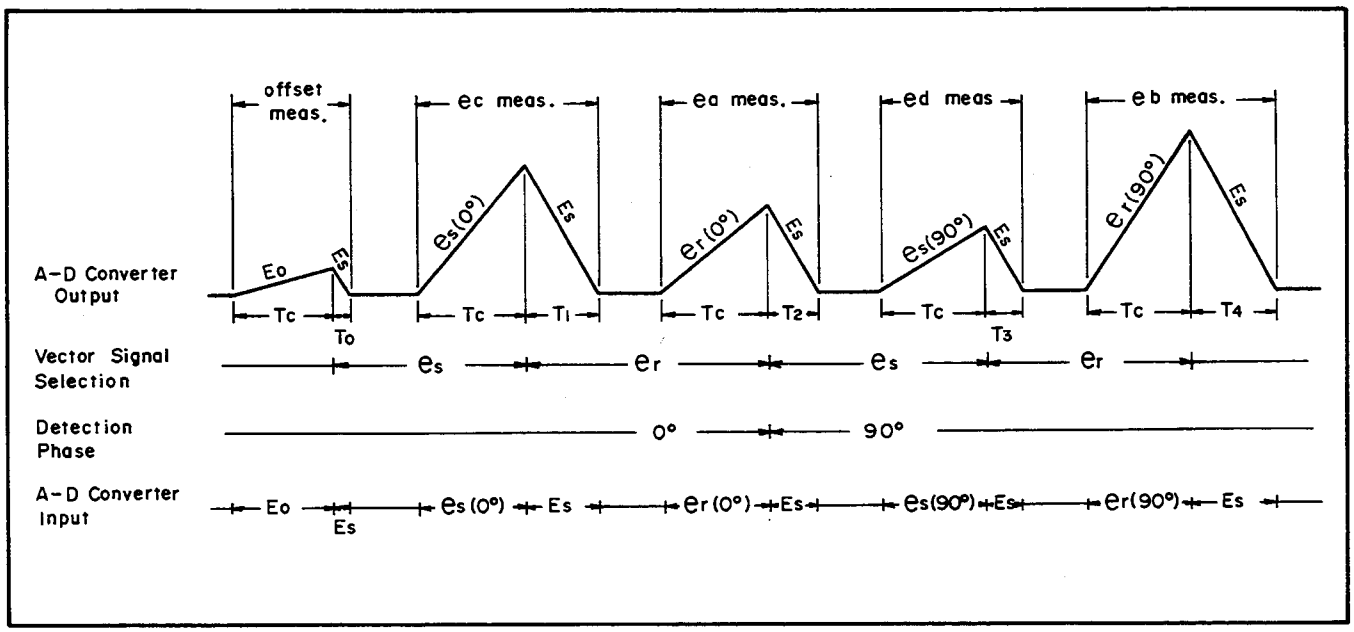


Figure 8-8. Vector Voltage Ratio Detection Timing.

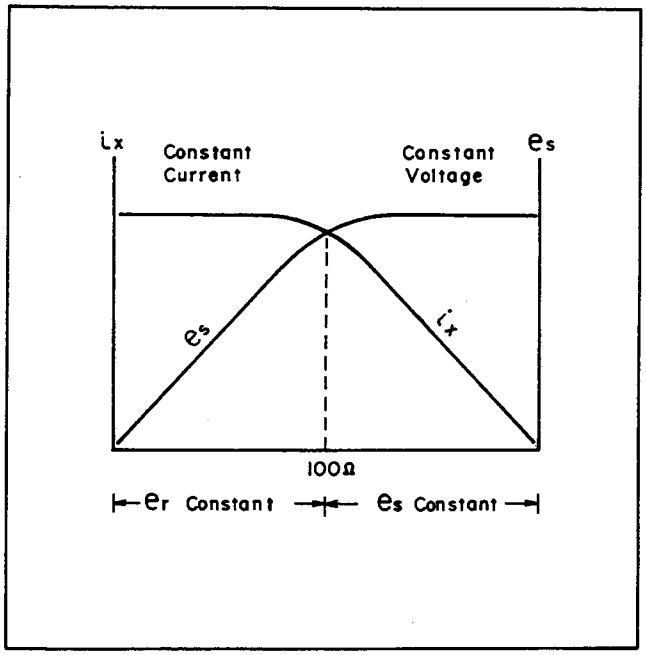


Figure 8-9. Test Signal Voltage and Current Relationship to DUT's Impedance.

8-27. When a high impedance DUT is measured, the test signal applied to the DUT is constant regardless the DUT's value. Therefore, the **e**s voltage is constant and the voltage across range resistor (**e**r) is inversely proportional to the DUT's impedance (that is, **e**r is directly proportional to the admittance). On the other hand, when a low impedance DUT is measured, a 100Ω source resistor (test signal source output resistance) causes a constant test signal current to flow through the DUT. In this case, the range resistor voltage, **e**r, is constant and the voltage across the DUT (**e**s) is proportional to the DUT's impedance. The relation between the test signal voltage/current and the DUT's impedance value is given in Figure 8-9. At test frequencies below 38kHz, the source resistance is set to 1kΩ at the 10kΩ measurement range and to 10kΩ on the 100kΩ and 1MΩ ranges.

8-28. Range resistor value is selected as either 100Ω, 1kΩ and 10kΩ in the middle resistance value range where the inherent residuals of the resistors do not deteriorate the resistance accuracy up to the 10MHz region. To magnify measurement range capabilities, the gain of the process amplifier can be increased by 10 or 100. This permits development of vector voltage ratios equivalent to those obtained when lower or higher range resistor values are used. For example, when the process amplifier gain is increased by 10 during specific A-D converter operating cycles, the calculated Rx and Xx values are 10 times that measured without the amplification process.

Note

When **e**c and **e**d signals are amplified by 10 in the Process Amplifier, calculated resistance value Rx is magnified and is given by the equation below:

$$Rx' = Rr \frac{10\,\mathbf{e}a\,\mathbf{e}c + 10\,\mathbf{e}b\,\mathbf{e}d}{\mathbf{e}a^2 + \mathbf{e}b^2}$$

$$= 10Rr \frac{\mathbf{e}a\,\mathbf{e}c + \mathbf{e}b\,\mathbf{e}d}{\mathbf{e}a^2 + \mathbf{e}b^2} = 10Rx$$

8-29. The Zero Offset Adjustment (Open and Short) function measures the residual impedance of the test fixture under short-circuit conditions and the stray admittance under open-circuit conditions. Correction calculations in the subsequent DUT measurements are made using the following equations and equivalent circuit model for the residuals.

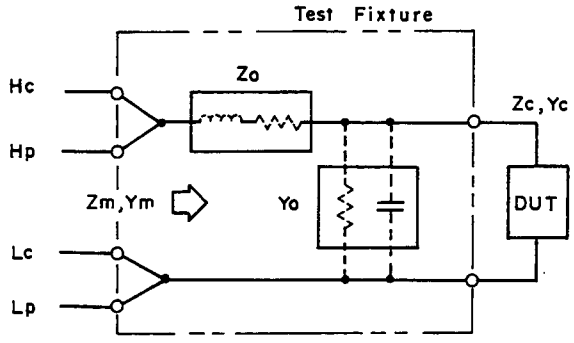


$$Zc = \frac{Zm - Zo}{1 - YoZm} \qquad (YoZo << 1)$$

$$Yc = \frac{Ym - Yo}{1 - ZoYm}$$

where, Zc : Corrected impedance value
Yc : Corrected admittance value
Zo : Residual impedance value
Yo : Stray admittance value
Zm : Measured DUT impedance value
Ym : Measured DUT admittance value

8-30. Amplitude-Phase Measurement Circuit

8-31. Generally, instruments that have amplitude-phase measurement capabilities for four-terminal network analysis are constructed of two independent voltmeter sections in order to simultaneously accept two channel inputs and a phase meter to detect the relative phase difference between the two signals, as shown in Figure 8-10. This configuration has a great advantage in measurement speed because both inputs are measured simultaneously. The amplitude-phase measurement of the 4192A is accomplished using a single channel vector voltage ratio detector which also operates to measure the vector signals from the auto-balance bridge in impedance measurements. Figure 8-11 shows the block diagram of the measurement circuits related to the amplitude-phase measurement function. The signal source, the source resistor circuit, and the VRD section are part of the impedance measurement circuit, also. Regarding the analog measurement circuit, the amplitude-phase measurement function is made possible by merely adding two input terminals (CHANNEL A and CHANNEL B) and the input selector switches to the VRD.

8-32. When the function of the 4192A is set to B-A mode (relative gain), the VRD alternately accepts the CHANNEL A and CHANNEL B inputs and separately detects their individual vector component magnitudes. The process amplifier signal selector switches sequentially select the input signals in a manner similar to the impedance measurement. The timing of the vector component measurement is illustrated in Figure 8-12.

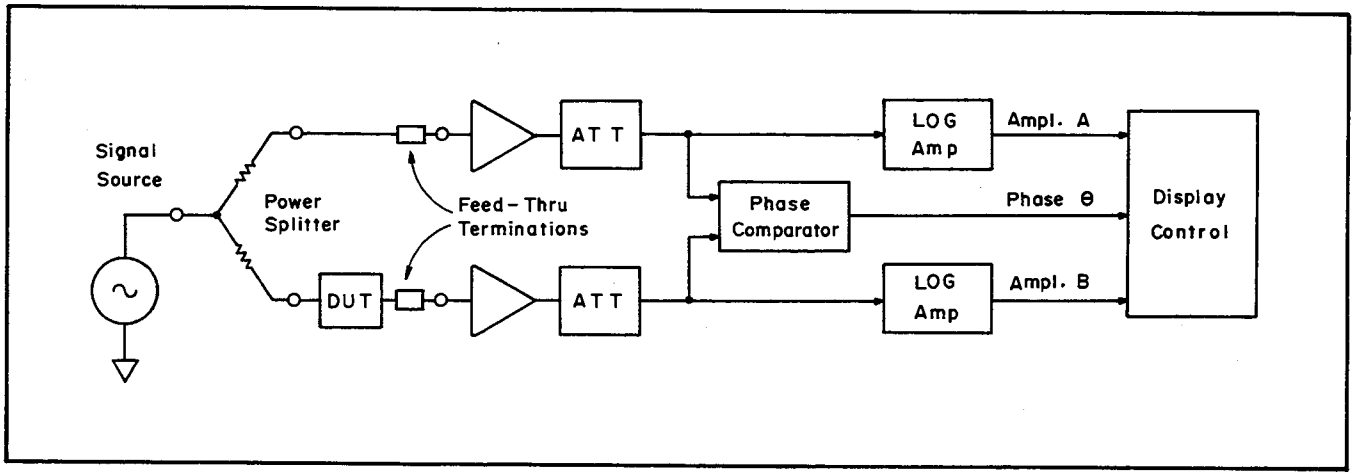


Figure 8-10. Typical Network Analyzer Construction.

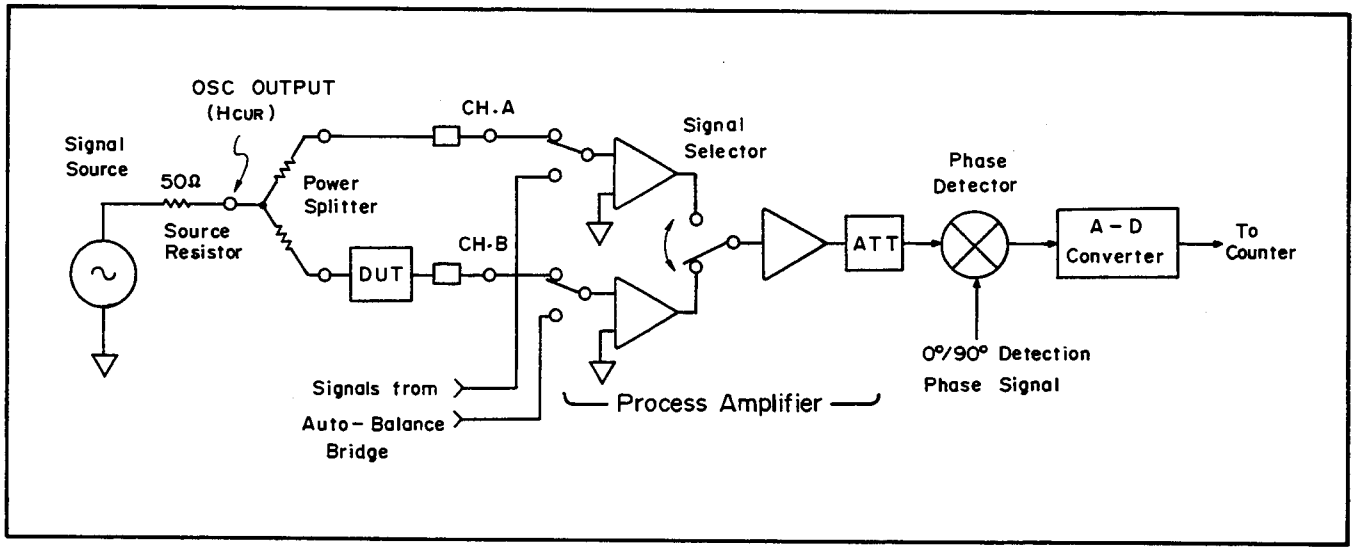


Figure 8-11. Amplitude-Phase Measurement Circuit Basic Block Diagram.

When the input signals are separated into Va, Vb, Vc, and Vd vector components, the amplitude ratio is calculated from the following equation:

$$B - A \text{ (in dB)} = 20 \log \frac{V_B}{V_A} = 20 \log \frac{\sqrt{Vc^2 + Vd^2}}{\sqrt{Va^2 + Vb^2}}$$

where, $V_A = Va + jVb$
$V_B = Vc + jVd$

The phase angle of the CHANNEL B input signal, measured in reference to CHANNEL A input, is calculated as:

$$\theta = \tan^{-1} \frac{VbVc - VaVd}{VaVc + VbVd}$$

The gain of the process amplifier is controlled in accurate 20dB steps for the respective inputs so that the detected vector components have appropriate magnitudes for the A-D converter input. The gain control increases the process amplifier gain not only by factors of 10 and 100 (used in impedance measurements), but also by a maximum factor of 1000 for the input signal amplitude below approximately -60dBm. Thereby, the dynamic range of the measurement is extended to 100dB. Because both input signals are measured with the same VRD circuit, an extremely high accuracy amplitude-ratio measurement is realized, eliminating the channel balance tracking errors (at the sacrifice of measurement speed).

8-33. When the 4191A is set to amplitude A or B (absolute) measurement mode, the VRD exclusively measures either the CHANNEL A or the CHANNEL B input. To measure the absolute amplitude of the input, the gain of the process amplifier is accurately calibrated with respect to standard input voltages. The VRD gain is appropriately controlled to select the input sensitivity similarly to ranging of voltmeters.

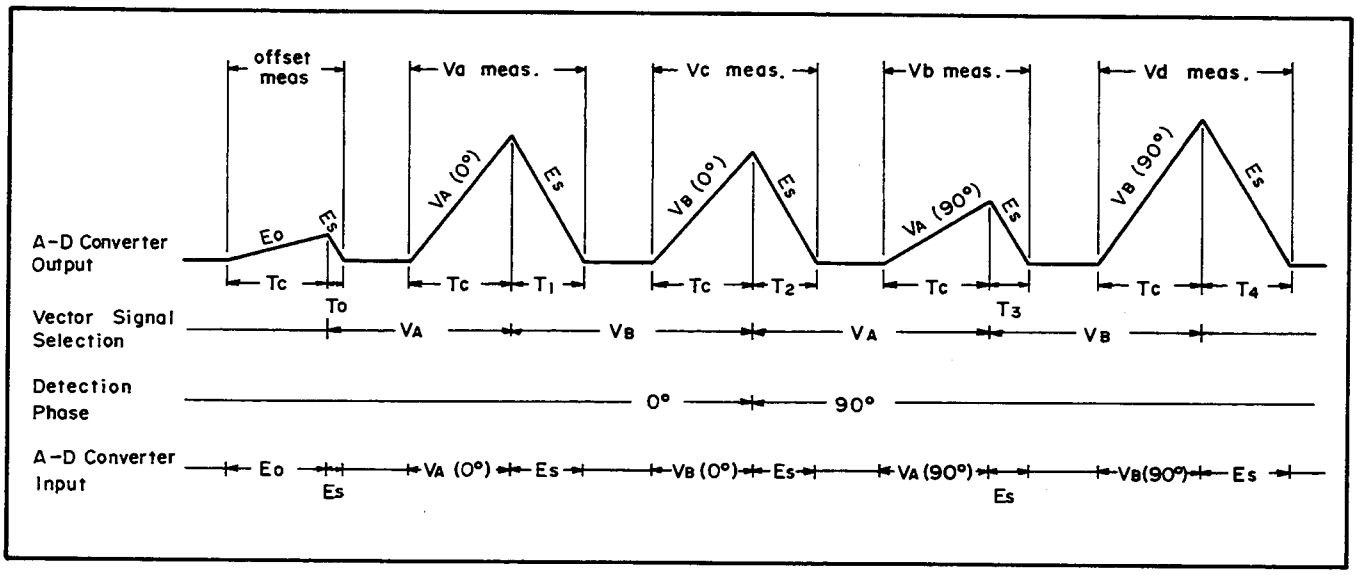


Figure 8-12. Amplitude-Phase Measurement Timing.

## 8-34. BLOCK DIAGRAM DISCUSSION

### 8-35. Analog Measurement Section

8-36. The measurement circuit of the 4192A is conceptually divided into three subsections: (1) the signal source, composed of the A3 Reference Frequency Generator and the A4 Fractional N Loop; (2) the auto-balance bridge, composed of the A1 Range Resistor/Null Detector and the A12 Modulator; and (3) the vector ratio detector (VRD), composed of the A2 Phase Detector/A-D Converter and A11 Process Amplifier. The block diagram of the 4192A measurement circuit is shown in Figure 8-22. For simplicity, the block diagram is drawn for function and signal flow and does not, therefore, show complete details. The bold lines in the block diagram show the main test signal flow and the dashed lines show the balance control loop of the bridge circuit.

### 8-37. Signal Source

8-38. The test signal is a 5Hz to 13MHz sine wave, synthesized from the output of the 40MHz crystal oscillator on the A3 board and the tunable 40.00000500 - 53MHz VCO on the A4 board. To control the frequency of the VCO so that the test frequency can be set with minimum 1mHz resolution, fractional N synthesis is employed in the frequency control PLL. The fractional N method enhances the frequency resolution of the test signal, permitting fast response to transient frequency changes.

In a conventional frequency synthesis PLL, because the output frequency is given as the product of the reference frequency and the divisor (integer) of the down-counter, a multi-stage PLL system is required to realize the conflicting goals of a high resolving power, fast loop response, and low phase-noise demanded for the test signal source. Using a low reference frequency to improve the resolution necessitates a loop filter with a large time constant. This, however, deprecates transient response, i.e., increases the time required to settle the loop.

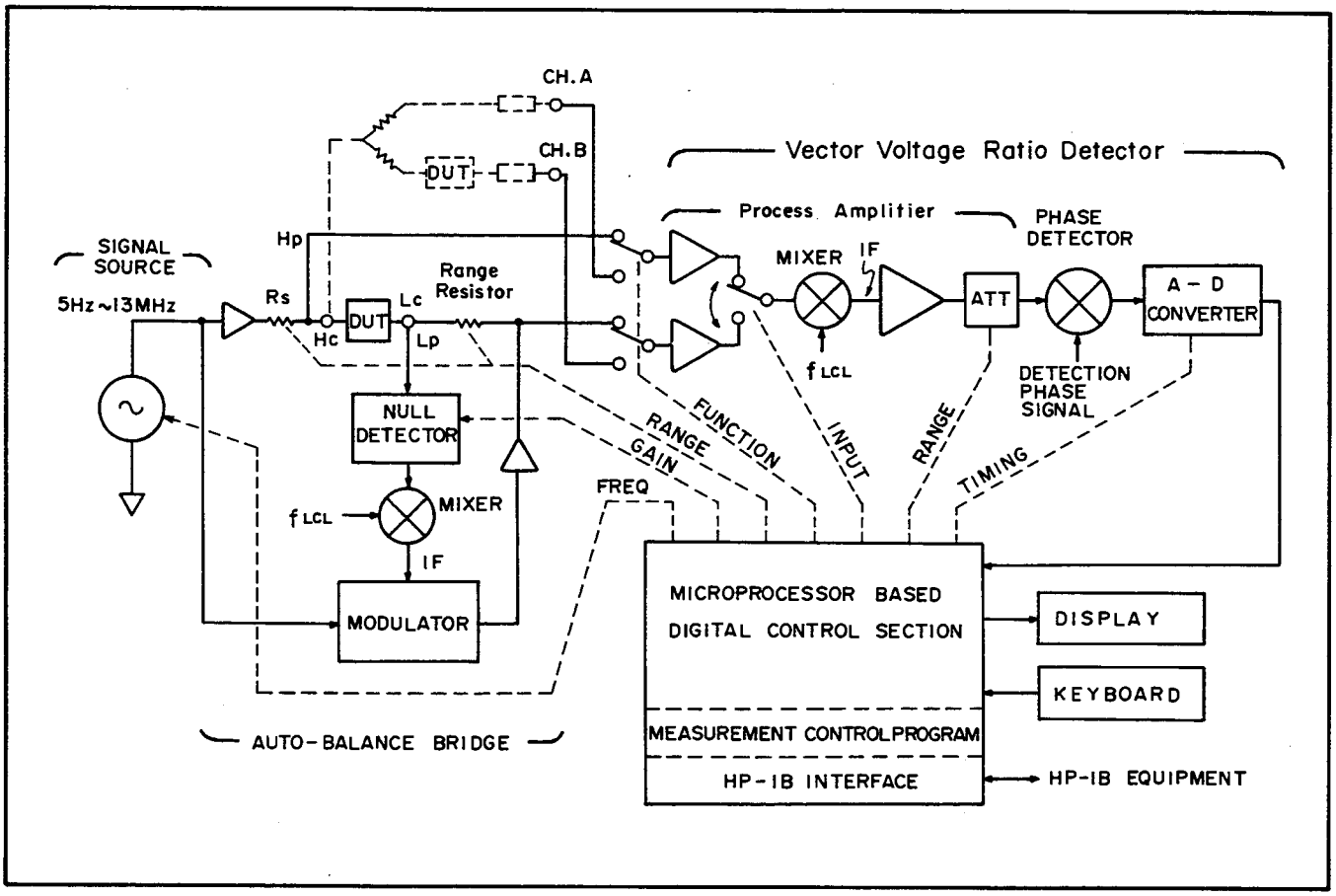


Figure 8-13. 4192A Block Diagram.

The fractional N frequency synthesis technique ensures that the output frequency can be stepped up or down in small increments by dividing down the VCO frequency with fractional divisors. The ÷N/÷N+1 counter (A4 board), called Fractional Down Counter, can divide down the VCO frequency using an integer divisor (N) or a fractional divisor (N.F). The ÷N/÷N+1 counter is preset to the integer part, N, of the fractional divisor (actually, the preset number is a nine's complement of N), and temporarily changes to N+1 on the timing found by the Phase Accumulator. Consequently, the averaged divisor is coincident with the number (fractional) required to settle the VCO output to the desired frequency for the full digits.

The block diagram of the ÷N/÷N+1 counter is shown in Figure 8-14. The cascaded programmable counters divide down the VCO output frequency in the steps of the loop reference frequency (100kHz) in accordance with the integer number of the programmed divisor. The ÷2/÷3 down counter, preceding the programmable counters, temporarily changes to ÷3 mode (from ÷2 mode) during one output cycle period when a command called Pulse Swallow is input. Thus, the ÷N/÷N+1 counter can delay the timing of the output for one cycle of the input each time a Pulse Swallow command is received.

This allows control of minimal shifts in the divided frequency without relation to the reference frequency which determines the resolution of the ordinary PLL frequency synthesizer circuit. When the Pulse Swallow operation is made, the phase difference between the phase detector inputs continuously expands (owing to the frequency difference) causing changes in the duty cycle of the output. See Figure 8-16. The level of the phase detector output increases in proportion to this phase difference and returns to a minimum each time the difference becomes (or exceeds) a multiple of 360 degrees. The cycle of the variance coincides with the frequency difference between the ÷N/÷N+1 counter output and the 100kHz loop reference signal. This is also equal to the number of pulse swallow operations per second. Because the phase detector output controls the VCO frequency, if such output is directly applied to the control input of the VCO, the VCO frequency is modulated. To eliminate the modulation, as well as to settle the VCO to the frequency determined by the average divisor, the Analog Phase Interpolator (API) circuit generates a reverse current signal which cancels the variance in the VCO control signal, and adds to the phase detector output. See the block diagram of the API circuit given in Figure 8-15.

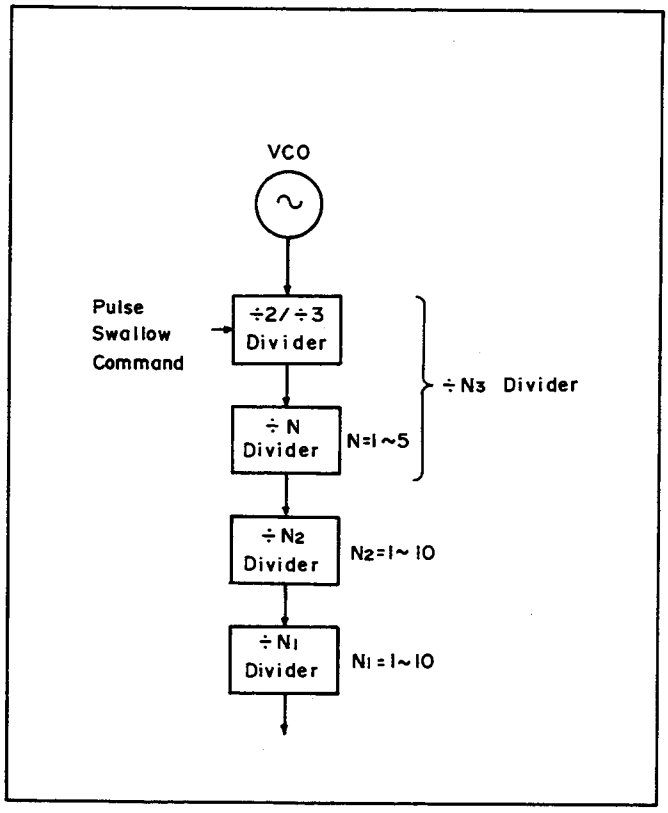


Figure 8-14. ÷N/÷N+1 Counter Block Diagram.

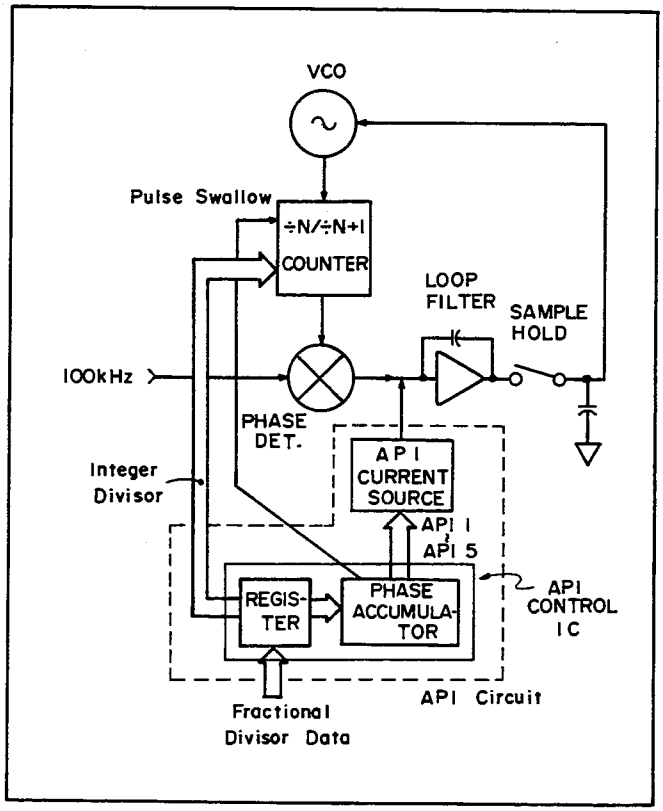


Figure 8-15. API Circuit Block Diagram.

As the phase difference between the phase detector inputs can be calculated for each cycle period from the frequency difference caused by the pulse swallow operation (and the number of input signal cycles counted from a given initial condition), the API circuit can develop the appropriate compensation current output on the basis of the arithmetically estimated magnitudes of the phase detector output. Here, it is important to note that the output of the phase detector is originally determined by the fractional part of the divisor (for the fractional down counter) which controls the VCO in frequency steps lower than the loop reference frequency. Therefore, the fractional part of the divisor determines the required compensation output of the API circuit.

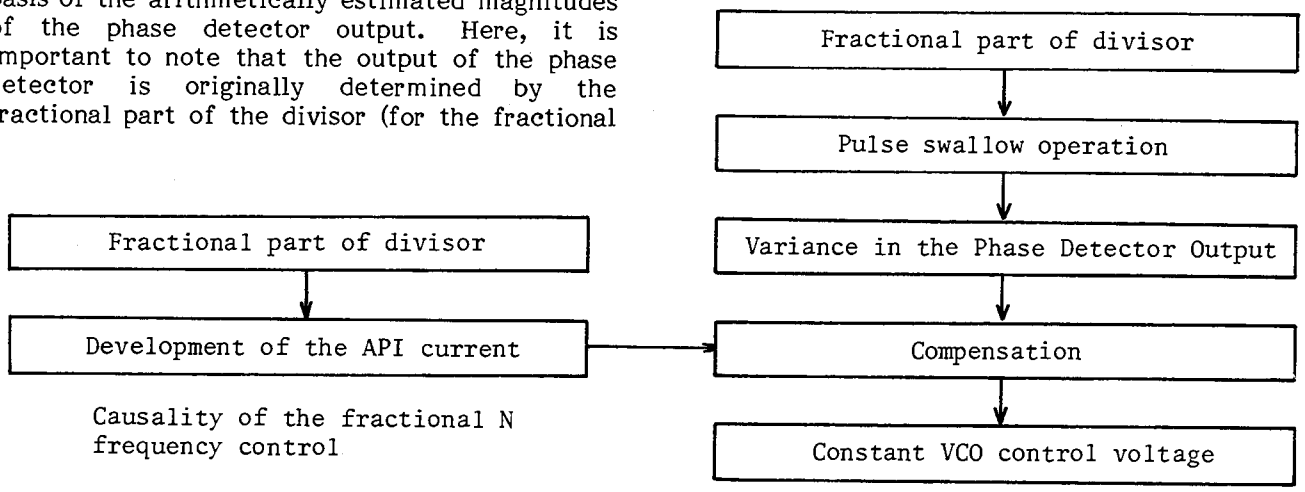


Causality of the fractional N frequency control

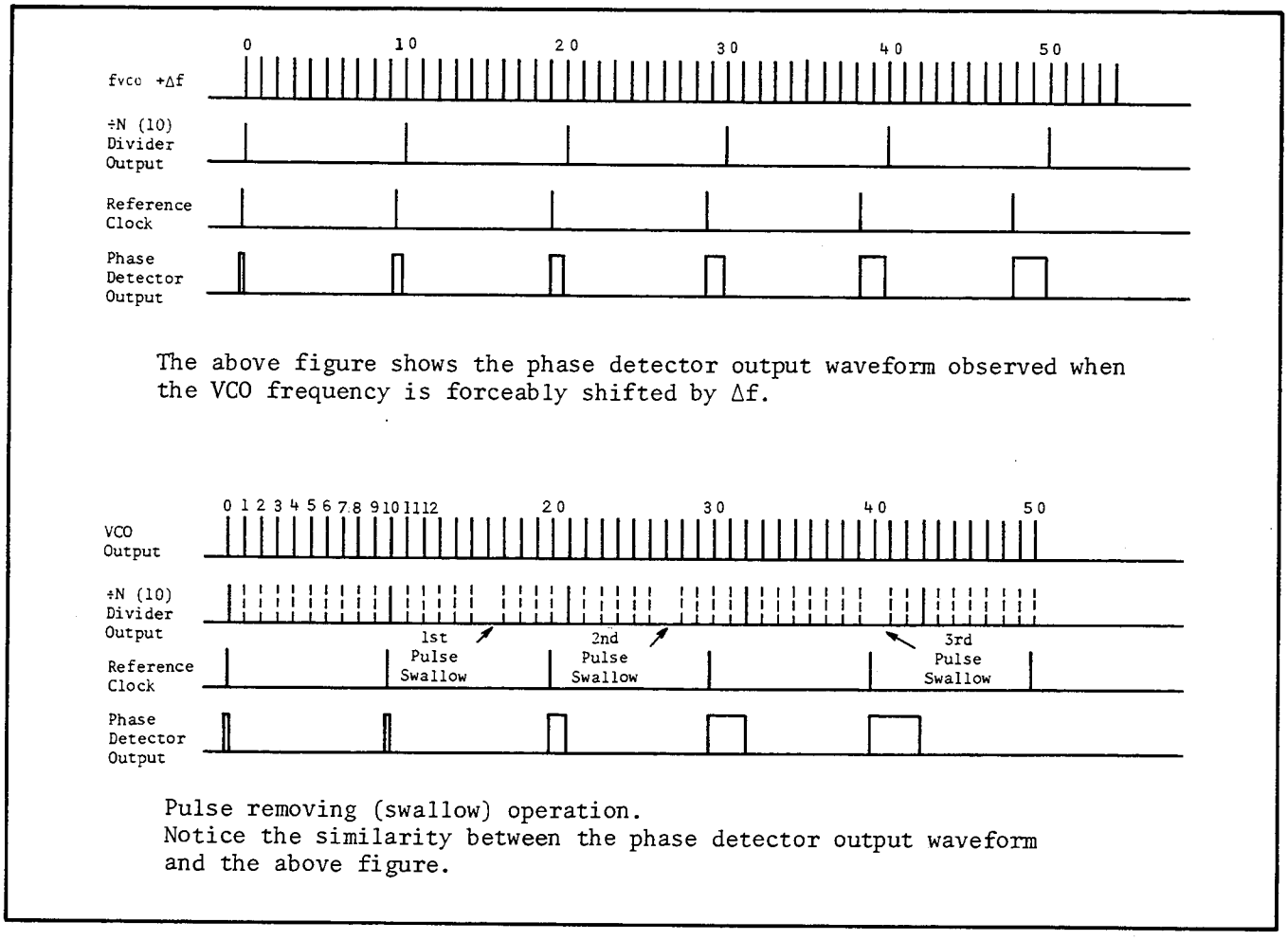


The above figure shows the phase detector output waveform observed when the VCO frequency is forceably shifted by Δf.

Pulse removing (swallow) operation.
Notice the similarity between the phase detector output waveform and the above figure.

Figure 8-16. Phase Relationship of the Phase Detector Inputs.

8-39. For more details, the function of the Analog Phase Interpolater is described as follows:

The divisor data of the fractional down counter consists of two digit groups. For example, when the desired test frequency is 12.311111MHz, the VCO must generate 52.311111MHz (40MHz is subtracted from 52.311111MHz to produce the test frequency), which is 523.11111 times the 100kHz loop reference frequency. The divisor, therefore, is 523.11111, and consists of an integer part 523 and a fractional part 0.11111.

The integer 523 is converted into its nine's complement, 476, and set in the programmable counters of the Fractional Down Counter. The fractional part 0.11111 is loaded into the Accumulator. The accumulator repeatedly adds the input number (fractional) to the result of the previous addition synchronously with the fractional down counter output. The increment of the number (accumulated number) stored in the Phase Register corresponds to the increment of the phase difference between the phase detector inputs. Let's look at the relationship between the accumulated numbers and the phase difference using the illustration in Figure 8-17.

When the VCO is settled at the frequency given as (integer part of divisor x 100kHz reference frequency), and when the Accumulator starts with the decimal input number 0.11111, the phase of the fractional down counter output shifts 39.9996° from that of the reference signal after one cycle period. After two cycle periods, the phase difference becomes double, that is 79.9992°, and the content of the Phase Register is 0.22222. The phase difference coincides with (360° x accumulated number). When the accumulated number exceeds 1 (the phase difference exceeds 360°), the Adder outputs the carry signal as the Pulse Swallow command, causing the fractional down counter to delay counting the VCO signal for one cycle period. Accordingly, the number of pulse swallow operations per second is (the fractional part of divisor x 100kHz reference frequency). Because the phase detector output controls the VCO frequency so that the fractional down counter output approaches the reference frequency, the VCO frequency must shift by the number of pulse swallow operations from the frequency given as (integer part of divisor x 100kHz reference frequency). Consequently, the VCO frequency is given as:

$f_{VCO}$ = (Integer part of divisor) x 100kHz + (Number of pulse swallow operations per 1 second)

= (Integer part of divisor) x 100kHz + (decimal number of divisor) x 100kHz

= (Full fractional divisor) x 100kHz

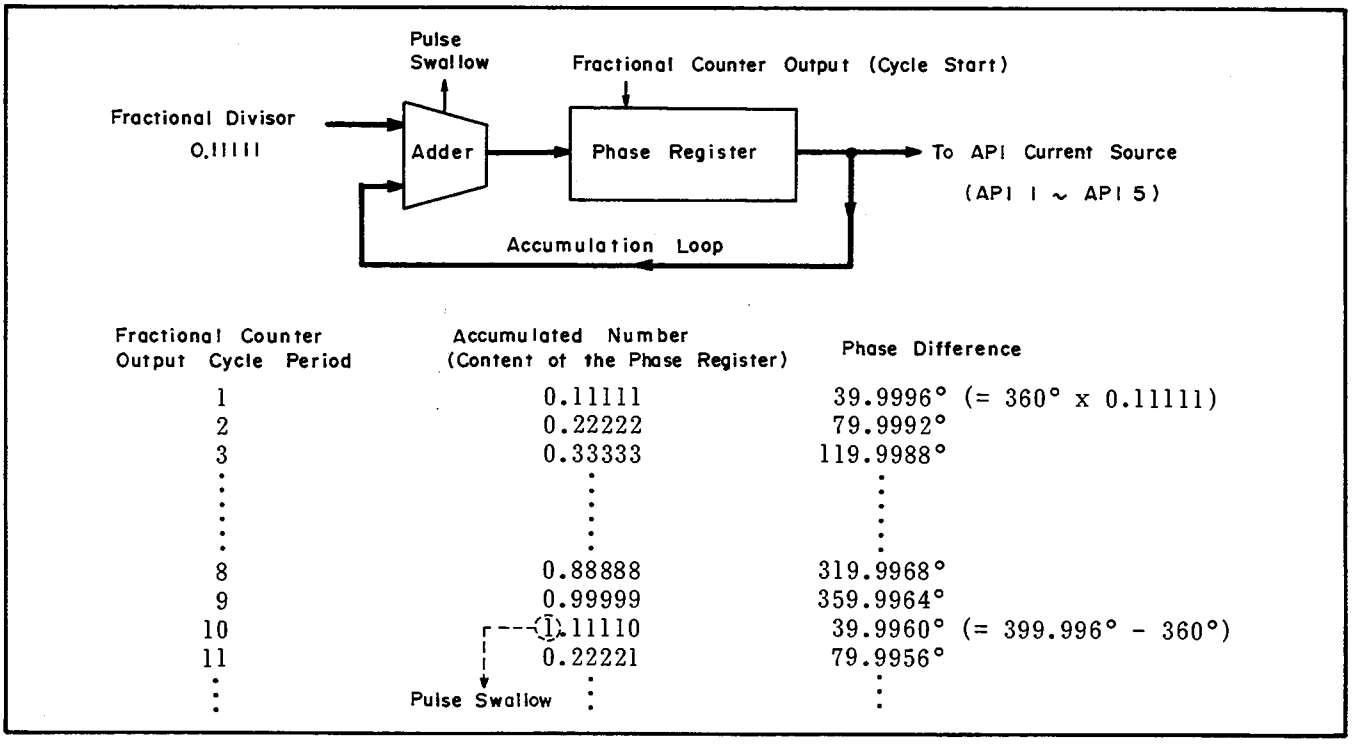


Figure 8-17. Phase Accumulator Operating Principle.

Actually, if not properly compensated, the $f_{vco}$ is modulated in response to the ripple of the phase detector output, caused by the pulse swallow operation. The API current source is a D-A converter which outputs a current to cancel the ripple on the basis of the phase register output data. Figure 8-18 shows the basic block diagram of the API current source. To perform the compensation with high speed as well as to ensure fast loop response, the loop filter (integrator) has a very small time constant. The compensation is made for each cycle of the phase detector output (100kHz) by means similar to dual slope integration.

Initially, a bias current (Ibias) starts charging the integrator simultaneously with the Cycle Start signal and continues for a constant time T. Then, an API output current ($I_{API}$) flows in addition to the bias current (thus, the charge current is Ibias - $I_{API}$) for period T2. The magnitude of the API current and the period T2 are determined by the control inputs of the API current source (API 1 to API 5 phase register output data). After a hold time, provided until the phase detector yields an output, the integrator discharges with the phase detector output current for the period T4 corresponding to the detected phase difference. The sample hold circuit retains the resultant VCO control voltage after the API operating periods. Thereby, the VCO continues stable oscillation for all the selected frequencies.

8-40. Reference Signal

8-41. The 100kHz reference signal for the fractional N loop is divided down from the output of the 40MHz crystal oscillator on the A3 board. Therefore, the fractional synthesizer necessarily syncs with the 40MHz output. The 40MHz oscillator can be locked to an external 1MHz or 10MHz reference frequency to enhance the frequency accuracy of the test signal. The sampler compares the external reference frequency with the 10MHz divided from the internal 40MHz and brings the 40MHz crystal oscillator frequency to an accurate 40MHz. If the external reference signal is outside the capture range of the frequency lock control, the Unlock Detector signals the Microprocessor.

8-42. Test Signal Output

8-43. The fractional N synthesizer output, 40.000005000MHz to 53.000000MHz, is mixed with the 40MHz crystal oscillator signal on the A12 board to generate the 5.000Hz to 13.000000MHz test signal. The level of the 40MHz signal is variable at the input of the mixer to permit setting the test signal to the desired amplitude. The test signal level setting data determines the dc current of the D-A converter output fed to the PIN diode attenuator which controls the amplitude of the 40MHz signal. The test signal is fed from a power amplifier that has low output impedance and is applied to the DUT through the source resistor on the A1 board.

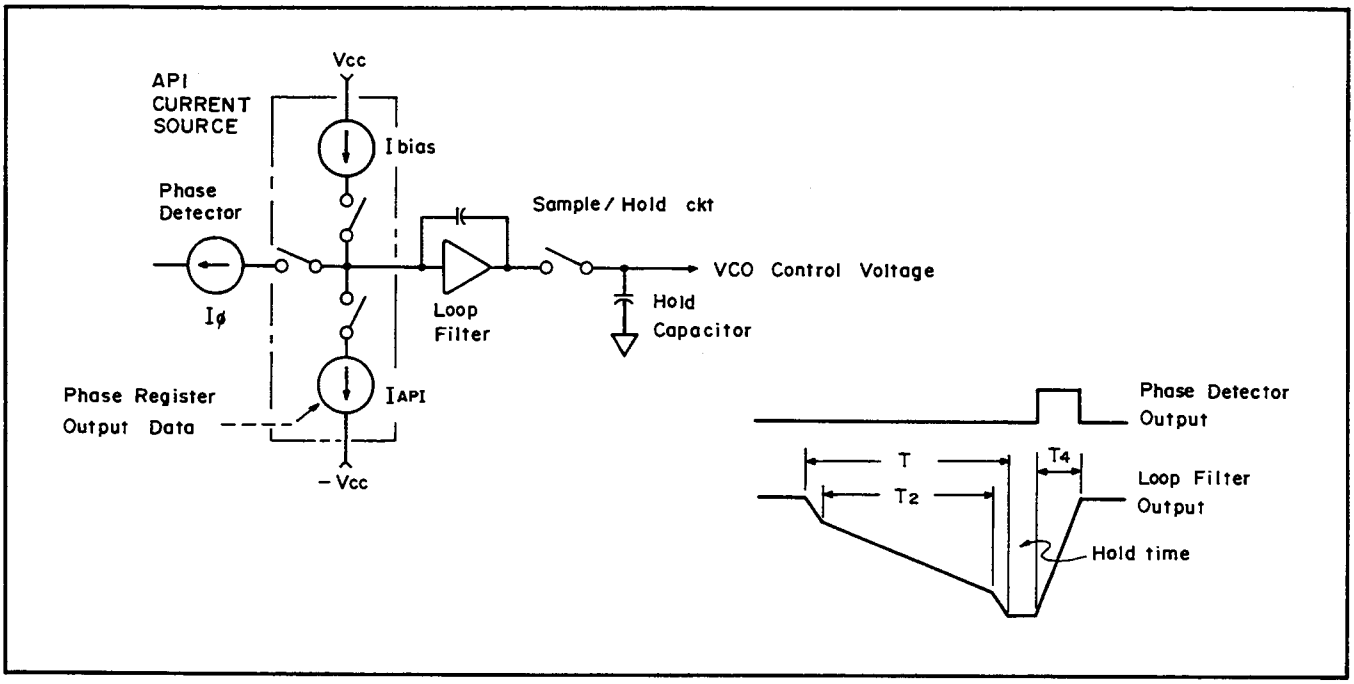


Figure 8-18. API Current Source Basic Block Diagram.

8-44. Auto-Balance Bridge

8-45. The Null Detector and the Modulator circuits compose the balance control loop of the bridge. To ensure that the auto-balance operation is accomplished at all test frequencies between 5Hz and 13MHz, the 4192A employs a unique vector IF technique and two frequency conversion mixers. One is located in the Null Detector and the other is in the modulator output circuit. The unbalance current which results when the bridge is not completely balanced is detected by the high sensitivity I-V converter through the LPOT terminal. The unbalance (vector) signal is mixed with the local oscillator signal which has a frequency equal to the test signal frequency plus IF. By this frequency mixing, the frequency of the unbalance signal is converted into an IF (constant) signal. The gain of the IF amplifiers following the mixer is controlled to maintain the sensitivity of the balance control loop almost constant against changes in the test signal level and DUT impedance. The unbalance vector IF signal is then phase detected and separated into its orthogonal vector (phase) components. The IF conversion obviates the need for different detection phase signals for various test frequencies. The phase detectors output dc voltages proportional to the magnitudes of the respective vector components. This vector information is transferred to the 40MHz signal fed from the A3 board in the following manner:

The dc voltage representing the 0° phase component actuates the 0°/180° Modulator to control the amplitude and phase (in-phase or reverse phase) of the 40MHz signal. The dc voltage representing the 90° vector component controls the amplitude and phase of the 40MHz signal which is shifted 90°. in reference to the source. The modulator outputs for both channels are summed and, consequently, an opposite (direction) vector of the unbalance signal is developed. The second mixer, following the Modulators, re-converts the frequency of this vector to the test frequency by mixing with the fractional N loop output signal. Finally, the signal from this mixer is applied to the range resistor to counter-balance the bridge circuit. If the bridge cannot be balanced with the given measurement conditions, the Unbalance Detector on the A1 board detects an unbalance vector IF signal with an abnormarily large amplitude.

8-46. Phase Tracking of the Bridge Control Loop

8-47. A unique phase tracking circuit on the A1 board permits digital rotation of both the 0° and 90° detection phase angles in accurate 22.5° steps. This enables compensation of the phase characteristic of the balance control loop so that the balancing is completely performed at all the test frequencies. The compensation adjustment is made manually at low frequencies. Phase tracking control for the full frequency range is automatic. The Phase Tracking Adjustment switches provide the 22.5° step phase shift by the 16 possible states of a 4-bit switch. The phase tracking control rotates the detection phases, set by the switch, in accordance with the step control program based on the typical frequency-phase characteristic of the balance control loop at high frequencies.

8-48. IF Signal Source

8-49. The local oscillator frequency used for the IF conversion is supplied by a stable PLL oscillator on the A3 board which generates a 40MHz minus IF. This source frequency is mixed with the output of the fractional N loop and is dropped to the requisite frequency corresponding to the test frequency plus IF. The frequency of the IF signal is selected as either 69.444kHz or 78.125kHz to prevent spurious interference which arises when the test frequency and the IF signal frequency are close (and the relationship of their harmonics). The automatic selection of the IF signal maintains the frequency difference between the IF signal and the test signal (and their harmonics up to the fifth order) at more than 1kHz. The relation between the test frequency and the selected IF signal frequency is summarized in Table 8-1.

8-50. Floating Measurement Circuit Configuration

8-51. The principle of four-terminal pair measurements demands that the test signal current be exactly equal at all points in the closed loop measuring circuit. Accordingly, leakage current flowing to ground must be kept extremely low. To meet this condition, the measurement circuit around the UNKNOWN

terminals is isolated from the circuit common of other circuits. That is, the outer conductors of the test cables, the range resistors, the source resistors, the null detector input circuit, and the process amplifier input circuit are floating above instrument ground. The floating measurement circuit configuration is shown in the schematic in Figure 8-23. This floating configuration allows the four terminal method to be used at low frequencies instead of the transformer isolation generally used. Additionally, because the test signal current does not flow outside if an arbitrary point in the measurement circuit is grounded (no return path exists), measuring DUTs which have a grounded terminal is possible. Actually, a portion of the test signal current leaks through the grounded terminal and returns to another point in the measurement circuit through the impedances between the floating circuit and ground which are provided to lower the sensitivity to external noises, so the measurement accuracy is affected only slightly.

8-52. Process Amplifier Stage

8-53. The switch circuit at the input stage of the process amplifier changes the measurement circuit for either impedance parameter measurements or amplitude-phase measurements. When making an amplitude-phase measurement, all of these switches are set to opposite positions from those shown in the block diagram (Figure 8-22). Then, the process amplifier accepts the inputs for CHANNEL A and CHANNEL B to be measured in place of the signals obtained from the bridge circuit. In B-A measurements and all the impedance parameter measurements, two channel inputs are alternately selected by the switches at the output stage of the input buffer amplifiers to independently measure those vectors in sequence (the parameter values are calculated from the measured vectors). For absolute amplitude A or B, the input for either CHANNEL A or CHANNEL B is measured. In all cases, the selected input signal is converted into an IF signal to achieve high accuracy attenuation, amplification, and phase detection at all test frequencies. The gain of the mixer is increased from 0dB to a maximum of 18dB in 4.5dB steps when the test signal level is decreased. Since the vector ratio is constant as long as the same amplification (or attenuation) is applied to both vectors, the variable gain mixer improves the accuracy of measurements performed with a low test signal level.

The IF signal is cleaned with the IF filter (LPF), eliminating spurious signals, harmonics, and noise outside the 90kHz pass band. To expand the measurable vector ranges, attenuators in the three IF amplifier stages are controlled. When measuring a low level vector, the attenuators are so controlled that the amplified signal has sufficient level for accurate phase detection. Conversely, when the input level is high, the attenuators decrease the amplitude to avoid saturating the circuit. In addition to expanding the measurement range capability, gain control for the IF amplifiers is also performed in conjunction with the setting of the test signal level.

Table 8-1. Test Frequency and IF Signal Frequency Relationship.

| IF | Test Frequency |
|---|---|
| $f_{IF}$ = 78.125kHz<br>$f_{IF}$ = 69.444kHz | 5Hz 38kHz 40kHz 51kHz 53kHz 74kHz 83kHz 116kHz 118kHz 153kHz |
| $f_{IF}$ = 78.125kHz<br>$f_{IF}$ = 69.444kHz | 153kHz 159kHz 233kHz 236kHz 311kHz 314kHz 389kHz 392kHz 13MHz |

8-54. Phase Detection

8-55. The phase detector separates the 0 ° or 90 ° phase vector component in reference to the 0 ° or 90 ° detection phase signal (phase detector drive signal output from the phase shifter) from the process amplifier output. Phase detection is performed in turn for each vector component of the two vector measurement signals which are alternately selected in the process amplifier. The detection phase is thus shifted by 90 degrees in accordance with the measurement control program. The phase detector output is averaged for conversion into a dc signal proportional to the magnitude of the detected vector component.

8-56. A-D Conversion

8-57. The integration A-D converter transforms the analog vector voltage measurement data into time interval data which is counted with the number of clock pulses by the counter in the digital control section. The integrator charge time is automatically controlled to be a multiple of the test signal period, between 20ms and 200ms (normal speed mode). Thereby, the effect of the test frequency components remaining in the dc signal does not appear at the output of the A-D converter because the characteristic of the normal mode rejection (NMR) effectively reduces the sensitivity to them. The line frequency noise superposed on the test signal is also eliminated by the charge time control. As a result of this charge time control, the charge quantity of the A-D converter varies in proportion to its time as well as to the input current. To achieve a wide dynamic range, adaptable for large variations in the charge quantity, and to enhance conversion speed, a multi-slope integration technique is incorporated in the A-D converter. The basic concepts of the multi-slope integration technique are outlined as follows :

The maximum voltage of the dual slope A-D converter output is limited by the saturation of the integrator. Therefore, expanding the dynamic range requires that a high dc source voltage be applied to the A-D converter. However, if the integrator is discharged at a constant rate before it is saturated and if it is subsequently charged until the constant charge period terminates, as shown in Figure 8-19, a high level input can be accepted without increasing the dc supply voltage. Because the discharge quantity subtracted in the charge period is known, the magnitude of the input can be calculated from the measured discharge time, as in dual slope A-D conversion. Proceeding on this discussion, the discharge in the integrator charge period may be performed many times to prevent saturation even by a greater input. This multi-slope (type) A-D converter is constructed using a comparison of the integrator output voltage to a reference threshold level and a discharge time control as shown in Figure 8-20.

When the integrator charge voltage reaches the threshold level, the FLVL level comparator causes the current source switch at the input of the integrator to close. The integrator discharges for a constant time Td with an input current, -Is, applied from the current source (the sum of the input current is Iin - Is). Then the current source switch is opened and the integrator restarts charging with the input current, Iin. Hence, the waveform in the charge

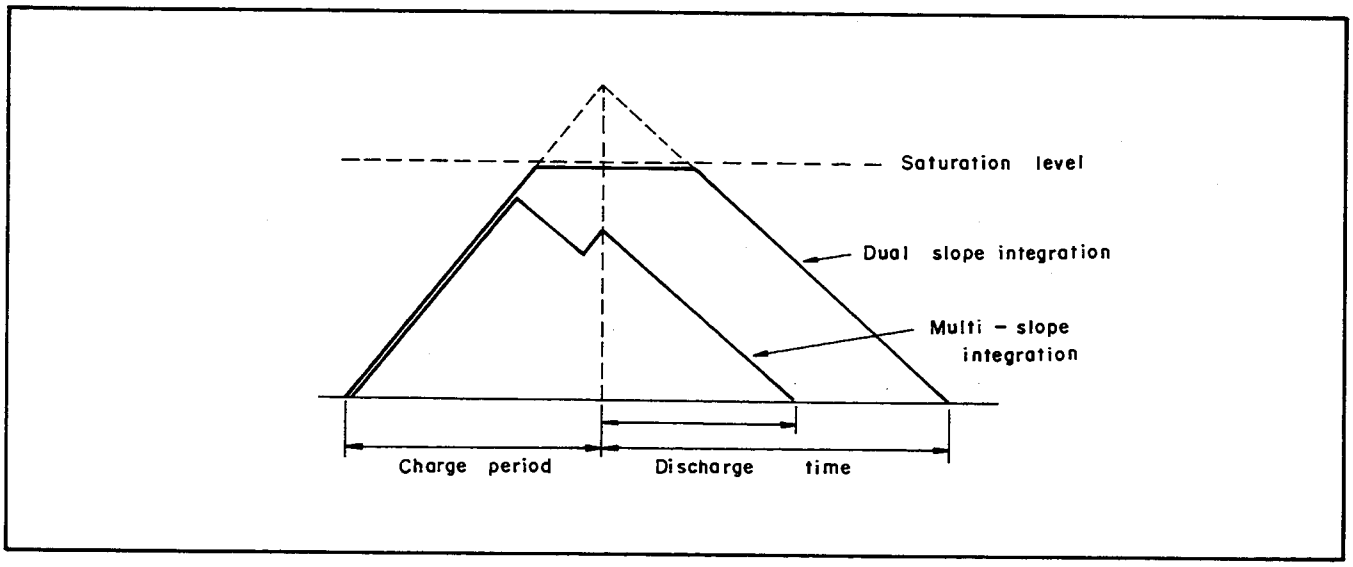


Figure 8-19. Principle of the Multi-Slope A-D Convertion.

period becomes a periodic sawtooth whose amplitude rises and falls between two levels. As a greater input speeds charging and decreases the voltage drop during the Td period, the number of sawtooth cycles automatically increases with the input level. A low level charge input which does not reach the threshold level produces a straight charge waveform as in ordinary dual slope A-D converters. The magnitude of the input is, thus, calculated from the number of sawtooth cycles and the discharge time.

Discharge is fast until the voltage reaches the SLVL threshold level of the vernier region where it slows down to improve the resolution of the time count. The SLVL comparator detects the discharge ramp voltage as it approaches the zero base level (exceeding the SLVL threshold level) and decreases the discharge current Is to 1/128. The counting in the vernier region is made by a different counter than that operating in the fast discharge period. Thereby, the slow discharge in the vernier region enhances the resolution of the A-D conversion corresponding to the discharge current ratio. The A-D converter is operated five times per measurement; an offset compensation cycle is initially performed to eliminate the effect of the residual dc offset voltages from the results of the subsequent operating cycles and then the magnitudes of the 0° and 90° components of the selected vectors are individually measured.

8-58. Internal dc Bias Source

8-59. The internal dc bias source produces an accurate dc voltage from the digital input data using the D-A conversion technique and applies the output (dc bias voltage) to the DUT through the closed circuit loop of the four-terminal pair measurement circuit. Figure 8-21 is a simplified schematic showing the internal dc bias circuit configuration. The bias source is floating above the circuit common of other circuits in order to supply the bias voltage output to the floating measurement circuit. The bias network, consisting of a balan transformer and a capacitor, allows connection of the dc bias source in the test signal current loop of the measurement circuit with a low additive (series) impedance. The bias voltage is applied between the outer conductor of the four-terminal pair measurement cable (inside the instrument) and the floating circuit common of the test signal source output circuit through the bias network. This yields the bias voltage between the HCUR and LCUR of the UNKNOWN terminals. Because the floating measurement circuit construction demands isolation of the bias circuit from ground, an external dc bias input circuit is not provided.

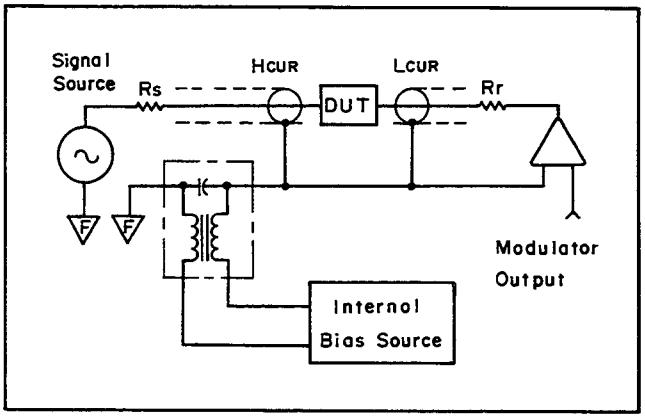


Figure 8-21. DC Bias Circuit Simplified Schematic.

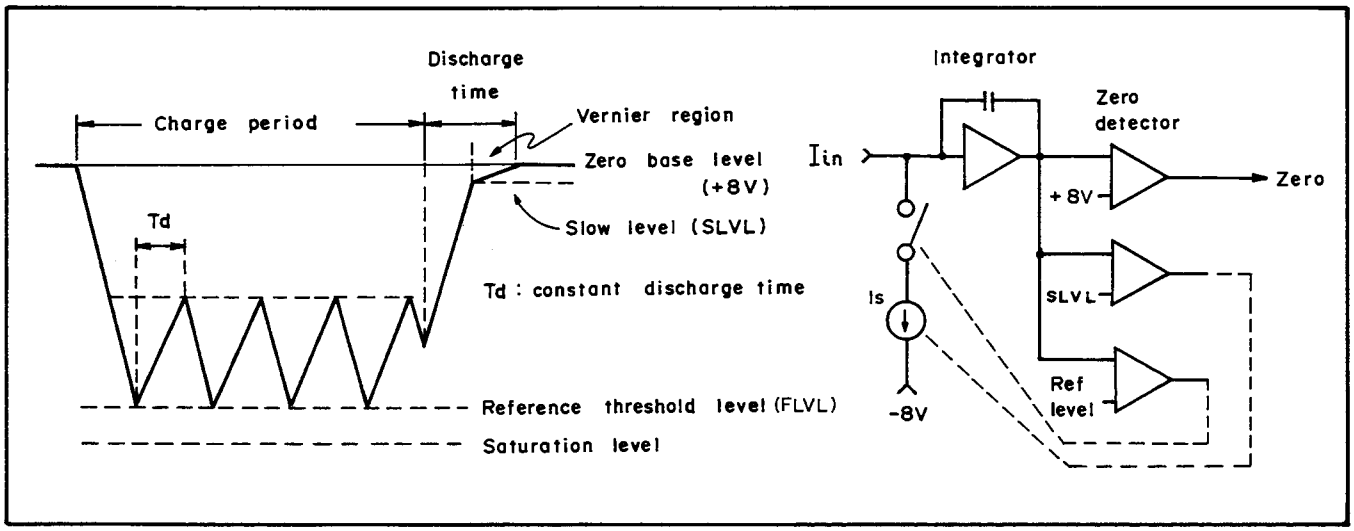


Figure 8-20. A-D Converter Charge/Discharge Control.

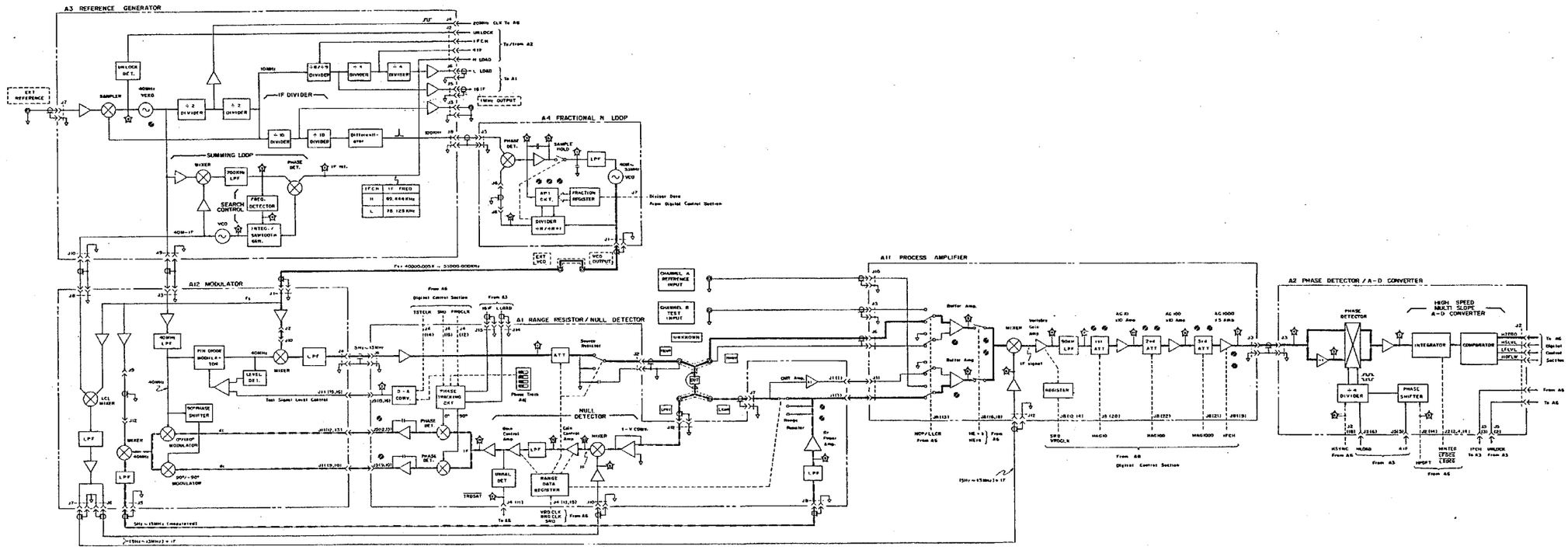


Figure 8-22. Analog Measurement Section Block Diagram.

Note: The floating measurement circuit section, indicated by the dotted lines, has an isolated circuit common and is powered from the Floating Power Supply on the A8 board.

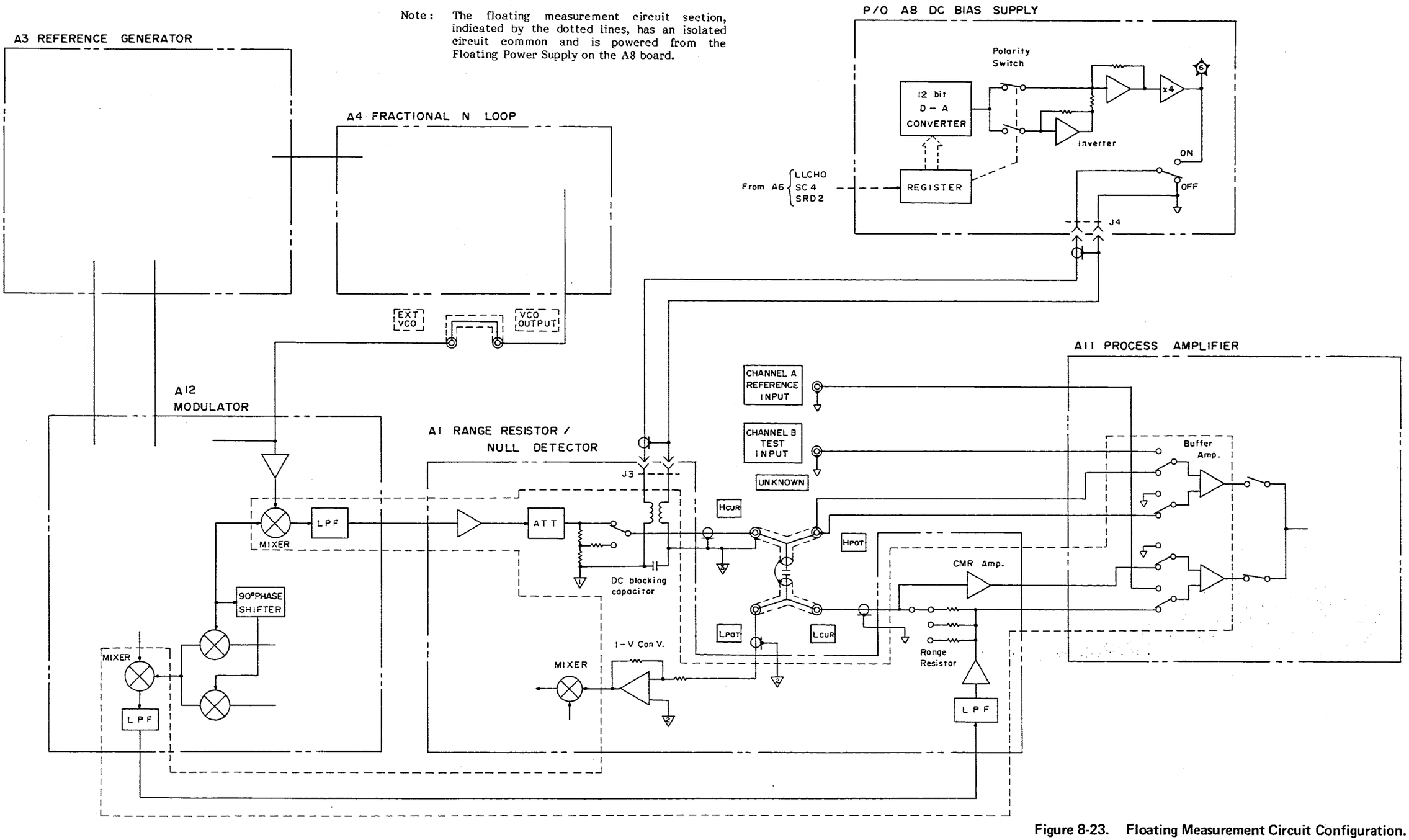


Figure 8-23. Floating Measurement Circuit Configuration.

8-60. Digital Control Section

8-61. Figures 8-29 and 8-30 are the block diagrams of the 4192A digital control section. The digital control section consists of the A6 Microprocessor Digital Control board and A5 Display and Keyboard Control board assemblies.

8-62. A6 Microprocessor Digital Control

8-63. The A6 board contains the following circuits: MPU (Micro-Processor Unit), Memory, HP-IB, VRD Control, Serial Port, and Front-Panel Control. The MPU section is the heart of the A6 board. It controls the timing of the digital circuits, the process of programmed measurements, and the response to input commands. An outline of the MPU circuit operating theory follows.

8-64. The Q1 Turn-On Reset Circuit initializes the Microprocessor after a 1 second (0.5 to 1.5 second) delay when the instrument is turned on. The Microprocessor then accesses the program ROM to read the stored data. The program is run one step at a time, synchronized with two complementary 1.25MHz clock signals (CLK$\phi$1 and CLK$\phi$2) supplied by the $\phi$1/$\phi$2 Driver. The relationship between the high and low periods of each signal is shown in Figure 8-24. The source of the clock signals is a 20MHz signal, output from the A3 board.

8-65. I/O Signals

8-66. The U114 microprocessor handles all digital data processing as well as providing timing control for the analog measurement circuit. The microprocessor is interfaced with other devices via the Data Bus Line, Address Bus Line, and several control lines. These I/O (Input/Output) lines have the following functions:

Data Bus Line (8 bit):
Bidirectional bus line for transfer of program and measurement data to and from the Microprocessor.

Address Bus Line (16 bit):
Unidirectional bus line from the Microprocessor for addressing program ROM's and data RAM's. Additionally, sets HP-IB Interface Adapter, or one of the data registers to enable data transfer to and from the Microprocessor via the Data Bus Line.

Control lines (B·VMA, B·R/$\overline{W}$, $\phi$2):
The B·VMA (Bus · Valid Memory Address) line controls synchronous access timing of RAMs, ROMs, and the HP-IB Interface Adapter. Additionally, this line controls the timing of the Device Selector outputs in conjunction with the $\phi$1 clock signal. The B·R/$\overline{W}$ (Bus/Read/Write) control line sets the RAMs, ROMs, HP-IB Interface Adapter, and I/O Data Buffer to "Read" or "Write" operating mode to control the direction of data transfer (time sharing) on the Data Bus Line to or from the Microprocessor. (B·R/$\overline{W}$ control logic is described further in paragraph 8-72.) The $\phi$2 clock signal line provides a 1.25MHz clock pulse for timing control in the digital control circuit.

8-67. The IOBE( I/O Bus Enable) line causes the I/O Data Buffer (U68) to link the Microprocessor to the transmitter/receiver device through the Data Bus line on the appropriate synchronous timing for a data transfer (see Figure 8-24). The I/O Data Buffer takes the required direction for the microprocessor to read or to write data via the Data Bus line. The B·R/$\overline{W}$ control signal determines the direction of the I/O Data Buffer.

8-68. Memory

8-69. The Program Control ROM has a 28K byte capacity and contains the analog section control programs and digital data processing routines (counting, calculation, data transfer, and storage). To accept the measurement control instructions from the Program ROM, the Microprocessor sequentially addresses the ROM through the Address Bus line. The U110 and U111

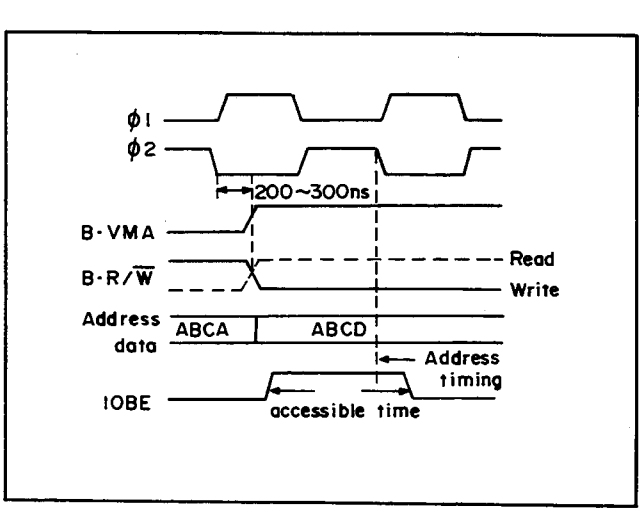


Figure 8-24. Address Timing Control.

ROM Chip Selector decodes address bits 11 through 15 to the 14 bit chip select signals (RS0 to RS12 and RS15) which cause the appropriate ROM to write out stored data onto the Data Bus line. The measurement control instructions, output from the ROM, are stored in the Serial Register (U63) of the Serial Port circuit or the Measurement Control Register (U31 and U33).

8-70. The Microprocessor also addresses the 2 killobyte Data RAM and bus line control devices (address registers and HP-IB Interface Adapter) to sequentially execute microprocessor program steps in accordance with the program stored in the ROM. The Data RAM is used to momentarily store front-panel control setting data, measurement results, and temporary data yielded from calculations. The state of the address bit 10 designates a set of two RAM's (each RAM has 4 bit input) to store or write out 8 bit data. The $\overline{\text{RAME}}$ (RAM Enable) signal causes the RAM to be accessible on the appropriate timing for complete memorization of input data. The Standby Battery on the A7 board preserves the data stored in the RAM when there is an ac power-loss. Simultaneously, the protective circuit on the A7 board outputs the Power Fail signal and disables addressing of the RAM to prevent storage of random data at the instant power is lost. During normal operation, the battery is recharged from a +5V dc voltage source.

8-71. Read/Write Control

8-72. The Read/Write ($B \cdot R/\overline{W}$) timing control signal is sent to the various storage devices, registers, decoders and the HP-IB interface adapter to control the transfer of data as follows:

Read: Causes a selected register or storage device to output stored data, or sets bus driver or HP-IB Interface Adapter to the drive mode. Microprocessor accesses (Reads) the data sent from the addressed device.

Write: Enables a selected register or RAM to store data, or sets decoder or HP-IB Interface Adapter to the receiver mode. Microprocessor sends (writes) data to the enabled device.

Read/Write control is performed in conjunction with the appropriate address signals to enable the correct device for the data transfer.

8-73. The outputs of the U107 Device Selector enables/disables the individual function blocks to link with the Microprocessor. The selected (enabled) circuit block has access to the Microprocessor through the Data Bus line.

8-74. The U8 and U105 I/O Address Decoders decode address bits 0 through 3 to the 12 bit timing control signals which control the operation of the various digital devices (registers, counters, drivers and flip-flops) in the VRD Control, Serial Port, Status Buffer and Interrupt Control circuits. These timing control signals are functionally similar to the $R/\overline{W}$ control signal; that is, they enable/disable individual devices in each circuit section in accordance with the programmed sequence.

8-75. IRQ Circuit

8-76. The U103 IRQ gate signals the input of an IRQ (Interrupt Request) to the Microprocessor. The five IRQ control lines ($\overline{\text{KBP}}$, $\overline{\text{HINTEG}}$, $\overline{\text{ADEND}}$ $\overline{\text{488IRQ}}$ and $\overline{\text{ENPFI}}$) transmit the request to the function control input from the keyboard, A-D Converter (A2 board) or the HP-IB control line. When a 4192A function is selected or changed, the IRQ line goes LOW. Normal measurement sequence control of the Microprocessor immediately pauses, except during integrator operating periods (multi-slope A-D conversion operation), to determine the nature of the control input from the contents of the U104 Interrupt Status Register (Serial Polling). Program address then jumps to the IRQ service routine to control the function control prior to program processing. The IRQ control line is always active to allow servicing of interrupt requests.

8-77. Serial Port

8-78. The U63 Serial Register in the Serial Port circuit momentarily stores the (static) control data to initiate the test signal, measurement range, and dc bias voltage entered from the keyboard or via HP-IB remote control. The Serial Register also stores data for setting the analog recorder output voltages. This control data designates the states of the analog switches to be set for the given measurement condition and provides input data for programmable devices in the dc bias supply and analog recorder output circuits. The stored data is transferred to the latches in the analog measurement section (and the A8 DC Bias Supply and A9 Analog Recorder Output) through the SRD 1, SRD 2, or SRD 3 Serial Data Line. This data transfer is made to the appropriate latch in the following manner:

First, the control data is sent to the U63 Serial Register and the $\overline{\text{S-PE}}$ (Serial Pole Enable) signal is set to store the input data in the register. Next, address bits 0 to 3, given by the program data, are stored in the U65 register. The U60 Serial Data Clock Decoder decodes this address data to the 6 bit analog control clock signals (SC0 - SC4; FREQ CLK, RNG CLK, TST CLK, VRD CLK, DC BIAS CLK, ANALOG OUT CLK) synchronously with the $\phi 2$ signal divided by 8. These clock signals cause specific latch(es) to store the data and to output the control signals to individual analog switches. The U64 octal counter drives the SRD Clock Register in periods of 8 cycles of the $\phi 2$ signal with which the Serial Register syncs. Thus, the Serial Register serially outputs an 8 bit data stream onto the Serial Data Line during one period of the analog control clock signal.

8-79. VRD Control

8-80. The VRD Control circuit controls the measurement functions in the A2 Phase Detector/A-D Converter to measure the vector ratio of the IF vector signals. Additionally, this circuit counts 4MHz clock during the discharge period of the integrator, and stops counting when the ZERO signal is received from the A-D converter. As A-D conversion requires accurate timing control for correct circuit operation, the sequential time periods of the control signals are developed from the integration time counters and delay generators which operate in sequence, independent from the programmed control by the microprocessor. The microprocessor provides the timing for the VRD Control to start control of the A-D Converter. The VRD Control directs the multi-slope integration operation of the A-D Converter as follows:

The block diagram of the VRD Control circuit in Figure 8-25 is referred to throughout the following discussion. To determine the period of the integrator charge time, the Microprocessor sets a data (number) N to the program input of the 20 bit Preset Counter (U13, U46, U48, U50 and U52). Then, the HSTITG signal sets the U47 Flip Flop causing the $\overline{\text{HINTG}}$ control line to go LOW. The $\overline{\text{HINTG}}$ signal closes the integrator input switch to charge the integrator (with the phase detector output). Simultaneously, the Preset

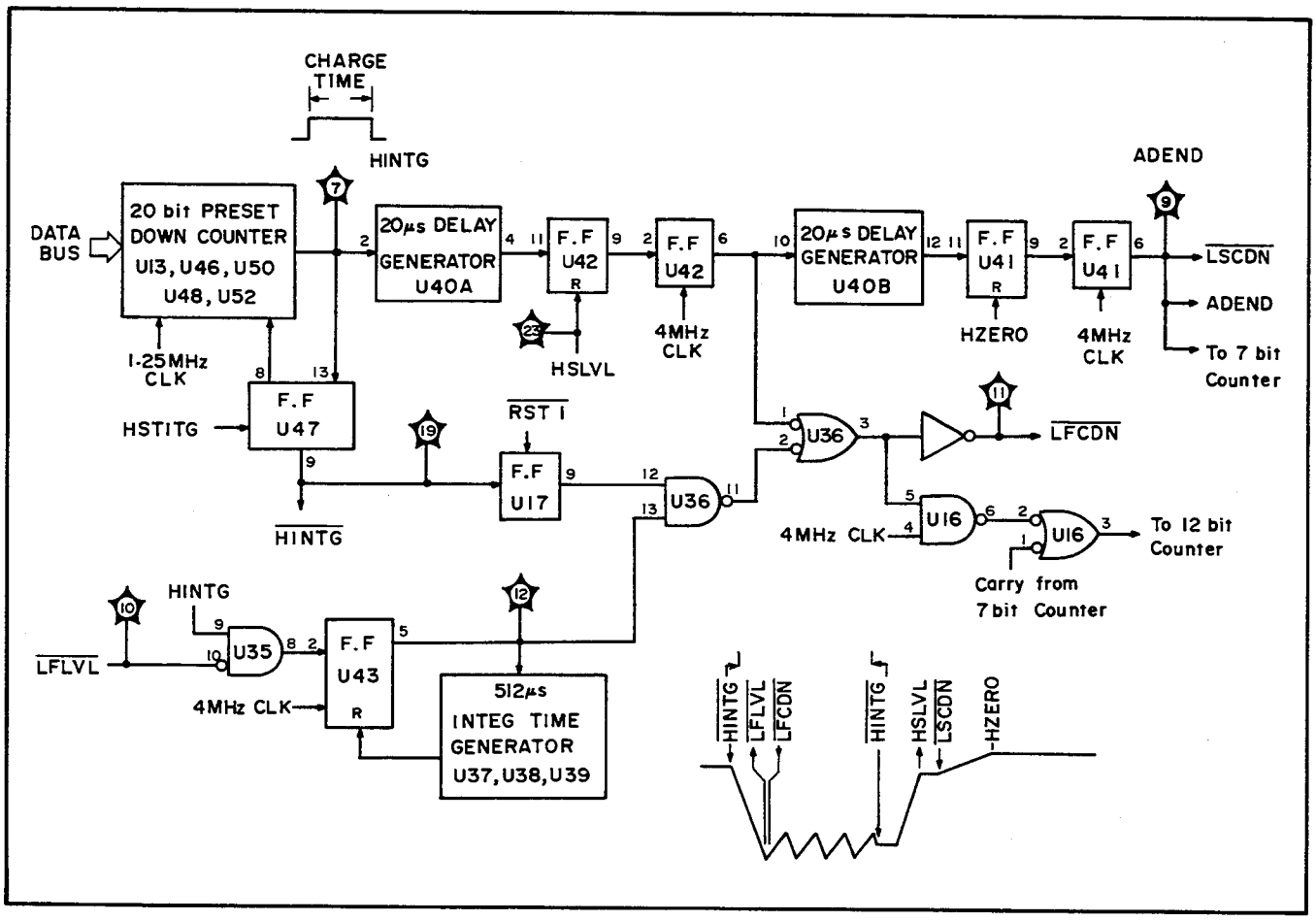


Figure 8-25. VRD Control Circuit Block Diagram.

Counter starts counting the 1.25MHz clock signal to provide the charge time determined as the programmed number N x 800μs (period of the 1.25MHz signal). When the integrator reaches the FLVL threshold level, the FLVL comparator on the A2 board pulls down the $\overline{\text{LFLVL}}$ line to LOW. The U43 Flip Flop synchronously activates the 512μs Integration Time Generator with the 4MHz clock signal. The $\overline{\text{LFCDN}}$ line goes LOW and causes the integrator to discharge during the 512μs period obtained by counting 2048 cycles of the 4MHz signal. The discharge in the charge period is repeated each time the $\overline{\text{LFLVL}}$ line goes LOW before the Preset Counter terminates the charge period. When the total number of 1.25MHz input pulses reaches N, the Preset Counter resets the U47 Flip Flop. The $\overline{\text{HINTG}}$ control line returns to HIGH causing the integrator input switch to open.

The 20μs Delay Generator (U40A) sets the U42 Flip-Flops 20μs after the charge period is terminated. The integrator holds the charged input during this time. Then, $\overline{\text{LFCDN}}$ line goes LOW to discharge the integrator simultaneously with opening of the U16 counter input gate. The 12 bit Counter (U49, U51 and U53) starts counting the 4MHz clock pulses supplied through the input gate. When the discharge slope of the integrator reaches the SLVL threshold level, the SLVL comparator on the A2 board resets the U42 Flip Flops. Simultaneously, the $\overline{\text{LFCDN}}$ signal returns to HIGH and the counter input gate blocks the 4MHz signal (to stop counting). The 20μs Delay Generator (V40B) following the U42 Flip Flops provides a 20μs hold time for the integrator. Thereafter, the Delay Generator sets the U41 Flip Flops to pull down the $\overline{\text{LSCDN}}$ line to LOW. The integrator starts discharging slowly the rest of the input with a low discharge current. In place of the 12 bit Counter, the 7 bit Counter (U55 and U57) counts the 4MHz pulses to detect the slow discharge period. A simplified schematic of the 12 bit and 7 bit counter circuits is shown in Figure 8-26. The 7 bit Counter transfers a carry pulse to add 1 count to the content of the 12 bit Counter each time the total number of 4MHz input pulses exceeds the full count. When the decay slope of the integrator output reaches zero, the HZERO signal from the Zero Detector (A2 board) resets the U41 Flip Flops. The $\overline{\text{LSCDN}}$ line returns to HIGH causing the 7 bit Counter to stop counting. The U41 Flip Flops concurrently drive the ADEND line, which is an input of the IRQ circuit, with the $\overline{\text{LSCDN}}$ line to signal completion of an A-D converter operating cycle to the Microprocessor. The Microprocessor sequentially accesses the Data Register (U54, U56 and U58) to read the stored counter outputs.

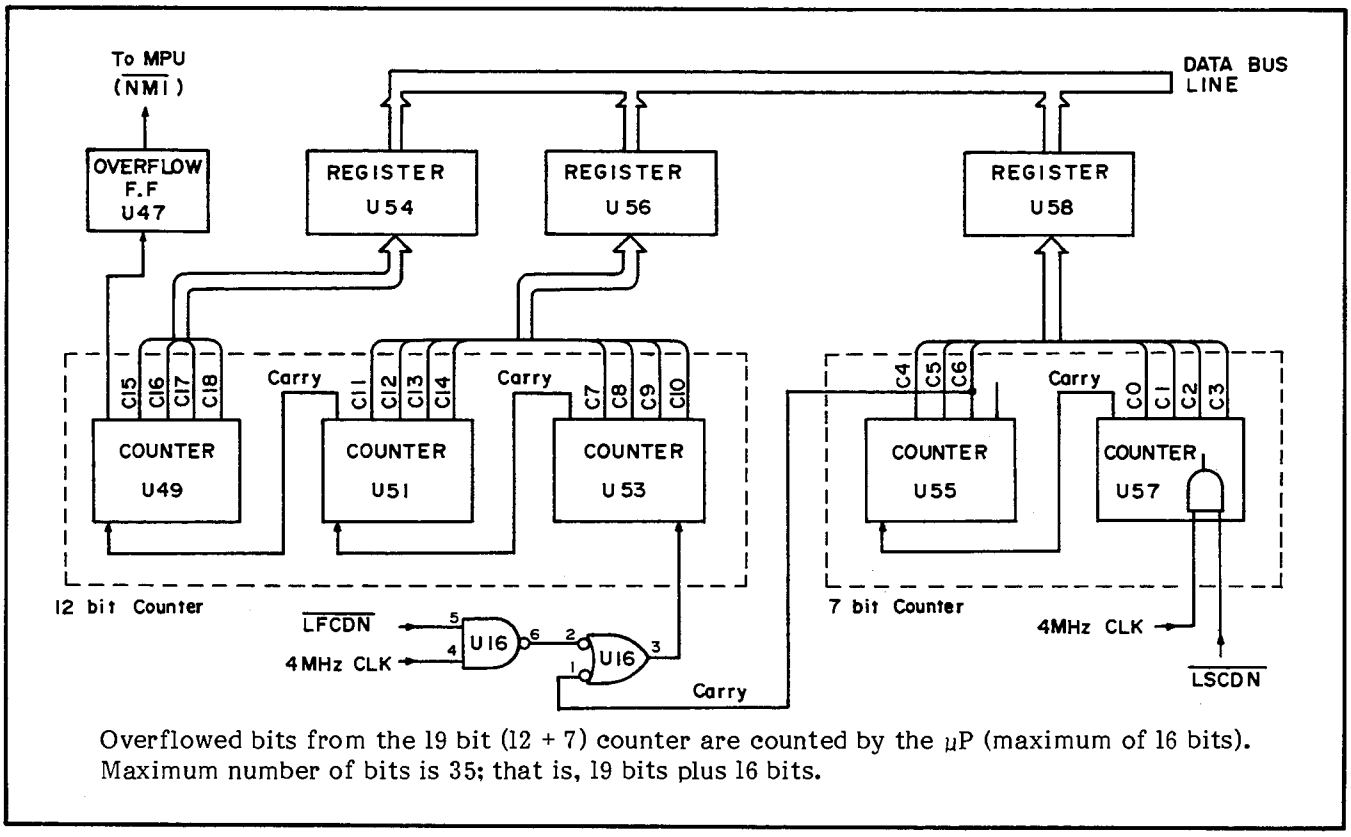


Overflowed bits from the 19 bit (12 + 7) counter are counted by the μP (maximum of 16 bits). Maximum number of bits is 35; that is, 19 bits plus 16 bits.

Figure 8-26. A-D Conversion Data Counter Simplified Schematic.

8-81. Measurement Control Register

8-82. Analog measurement sequence control signals which do not require accurate control timing (such as A-D conversion) are set in the U31 and U33 Measurement Control Register from the Program ROMs. The stored data is replaced each time the states of the individual analog switches in the All Process Amplifier or the A12 Phase Detector/A-D Converter are to be changed.

8-83. Fractional N Control Register

8-84. The U30 Fractional N Control Register receives the fractional divisor data through the Data Bus line and transfers it to the Fractional N Control Chip (A4 board) in 4 bit parallel-data serial fashion. The INV (Instruction Valid) and ECLK signals cause the Fractional N Control Chip to store the transferred data.

8-85. Status Buffer

8-86. The Status Buffer (U9, U10, U11 and U32) outputs the data for the states of the S1 Cable Length Selector and S2 Special Function Selector DIP switches onto the Data Bus Line by a request from the Microprocessor. The Microprocessor accesses the Status Buffer to read the selected functions and the data (set by the switches) after the instrument is turned on. Also, the U32 buffer accepts an external trigger input, Cable Length switch setting data (from the front panel) and the status annunciation signals (VCOH, VCOL, UNLOCK and $\overline{\text{TRDSAT}}$) from the analog measurement section. The Microprocessor monitors these signals each time a measurement starts and manages measurements in response to them. If the $\overline{\text{TRDSAT}}$ signal goes LOW, for instance, the measurement sequence initializes when the auto-offset cycle of the A-D Converter is completed. Additionally, UCL error message is displayed on the front-panel.

8-87. HP-IB Interface

8-88. All HP-IB interface functions are handled by the U7 HP-IB Interface Adapter. The Interface Adapter controls the "handshake" between the Microprocessor and external HP-IB equipment on an HP-IB program basis. The architecture of the Interface Adapter is shown in Figure 8-27. The 8 pairs of registers in the Interface Adapter store data transferred to/from peripherals as directed by asynchronous operation of the Control Bus signals. Each register pair stores one bit of data on the 8 bit data bus line. When the instrument is turned on, the $\overline{\text{IO3}}$ control line is set to LOW. The Microprocessor accesses the HP-IB address data in the U6 Register to display the instrument address number on the front-panel. The Microprocessor accesses the Interface Adapter by causing the $\overline{\text{488E}}$ control line to go LOW. Address bits 0, 1, and 2 select the internal register of the Interface Adapter which is to store or write out the data. An interrupt control request from the external HP-IB controller pulls down the $\overline{\text{488IRQ}}$ output line of the Interface Adapter causing the $\overline{\text{488IRQ}}$ input of the IRQ gate (U103) to go LOW. Thus, the Microprocessor is requested to respond to the interrupt input.

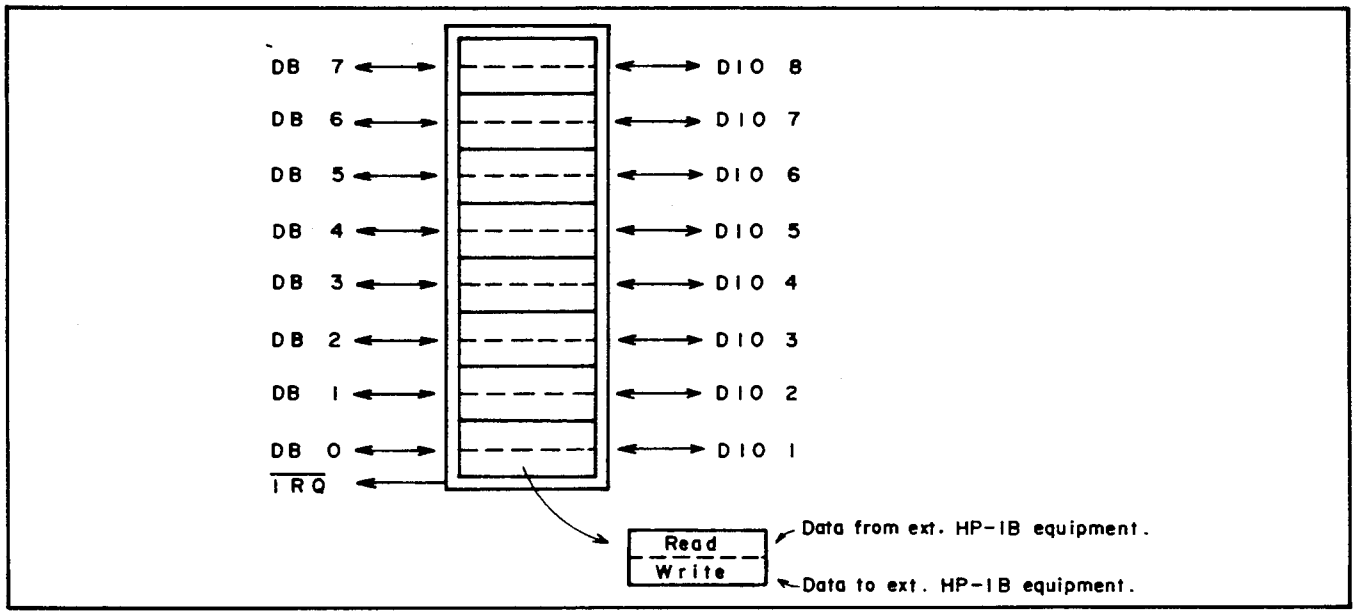


Figure 8-27. HP-IB Interface Adapter Internal Register Configuration.

8-89. Front-Panel Control

8-90. The Front-Panel Control section mediates the data transferred to/from the A5 Display and Keyboard Control. When a control key on the front-panel is pressed, the $\overline{KBP}$ interrupt signal resets the U99 Flip-Flop causing the IRQ line to go LOW. Thereby, the interrupt request from the keyboard is input to the Microprocessor. While a keyboard switch is on, the state of the KBD bus line (KB0 - KB7) represents the address of the key actuated. The $\overline{KBRD}$ signal then enables the U101 Keyboard Status Buffer so that the Microprocessor accesses the KB signals via the Data Bus Line.

8-91. The Display Data RAM (U90 through U94) stores a complete set of the on-off combinations of all the display elements on the A5 board. When the $\overline{LWRT}$ signal is HIGH, the U90 and U91 RAMs store parallel 8 bit display data from the Microprocessor. Similarly, the $\overline{UWRT}$ signal actuates U93 and U94 RAMs. Before beginning transfer of the measurement display data, the address data, which determines the initial state of the Display Scan Counter output (SA0 - SA3), is sent to the Display Data RAM. This selects the RAM address for initial storage of the transferred display data. Successively, the display data is sent to the Display Data RAM through the Data Bus Line. The U92 Display Scan Counter simultaneously advances the RAM address from the preceding address for every set of incoming display data. The 8 bit display data is previously coded by the Microprocessor as appropriate for driving the seven-segment displays (or indicator lamps) when the data is, in turn, written out from the RAM. The 4-bit RAMs store the 8 bit display data in the following manner :

U90 and U91 : Stores 7-segment numeric display data for DISPLAY A and DISPLAY B along with display data for multiplier lamp and unit lamp indicators (includes BIAS and X-Y recorder output indicators).

U92 and U93 : Stores 7-segment numeric display data for FREQ/BIAS display along with display data for lamp indicators in the function control keys.

Since the Display Scan Counter starts counting from the desired address number, it is possible to change part of the memory in the RAM to new display data.

8-92. Each set of two display data RAMs stores 16 sets of 8 bit display data. When the $\overline{LWRT}$ and $\overline{UWRT}$ signals are LOW, the Display Data RAM writes out the stored data onto the $\overline{CA}$ ($\overline{CA0}$ - $\overline{CA7}$) and $\overline{CB}$ ($\overline{CB0}$ - $\overline{CB7}$) bus lines, as addressed by the Display Scan Counter. To display numeric data, the RAM outputs the display segment signals which illuminate the numeric figure of each count digit of the displays. The RAM address signals (SA0 - SA3) are simultaneously decoded by the Anode Scan Decoder (A5 board) to periodic anode scan signals which activate, in sequence, each digit. Synchronous operation of the Display Data RAM and the Anode Scan Decoder accomplishes matrix drive of the display. The lamp indicators are also controlled in the same manner.

8-93. A5 Display and Keyboard Control

8-94. The A5 board is divided into two sections: The Display section and Keyboard Control section. The Display Section consists of Display Drivers and various numeric displays and indicators. The display data signals from the Display Data RAM (A6 board) gain the power to drive the display elements by the Cathode Drivers (U13, U14, U15 and U16). The $\overline{CA}$ and $\overline{CB}$ output bus lines ($\overline{CA0}$ - $\overline{CA7}$ and $\overline{CB0}$ - $\overline{CB7}$) deliver the display data signals to all the display elements connected to the respective bus lines. The display elements on each bus line are subdivided into 16 groups corresponding to the address numbers of data written out from the Display Data RAM. The U3 Anode Scan Decoder decodes the 4 bit address signals (SA0 - SA3) to 16 bit anode drive signals (AN0 - AN15), which activate each group of display elements in the address order assigned to the display data. Accordingly, the display elements are sequentially lit for the periods of 1/16 display cycle time (128μs).

8-95. The U11 Key Scan Counter outputs periodic KB signals (KB3 - KB5) synchronized with the 7.8kHz DSCLK input signals. These 3 bit output signals are decoded by the U12 Key Scan Decoder to keyboard scan signals ($\overline{Y0}$ - $\overline{Y5}$), which, in turn, enable the individual keys of eight key groups (descriminated by X line numbers). Each control key in the key group is enabled, in sequence, to perform its specific function. When a key (for example, "SPOT" key) is pressed, one of the keyboard output lines $\overline{X0}$ through $\overline{X7}$ goes LOW at the moment the pushbutton switch input is pulled down (set LOW) by the keyboard scan signals. In this example, the $\overline{X3}$ line goes LOW when the U12 Decoder sets its $\overline{Y0}$ control output line to LOW. The U18 Priority Encoder converts the 8 bit output signals of the keyboard into 4 bit signals ($\overline{KB0}$, $\overline{KB1}$, $\overline{KB2}$ and $\overline{KB6}$) as well as pulling down the $\overline{KBP}$ line to LOW. The gate input of the U11 Key Scan Counter goes HIGH and subsequently the Key Scan Counter stops. The states of the Key Scan Counter output (KB3 - KB5) and the keyboard output given by the $\overline{KB0}$, $\overline{KB1}$, $\overline{KB2}$, and $\overline{KB6}$ signals are coordinated with the address of the key pressed. The $\overline{KBP}$ line goes LOW causing the IRQ gate on the A6 board to issue an interrupt request. The Microprocessor reads the key scan counter and the keyboard output data to identify the pushbutton function actuated.

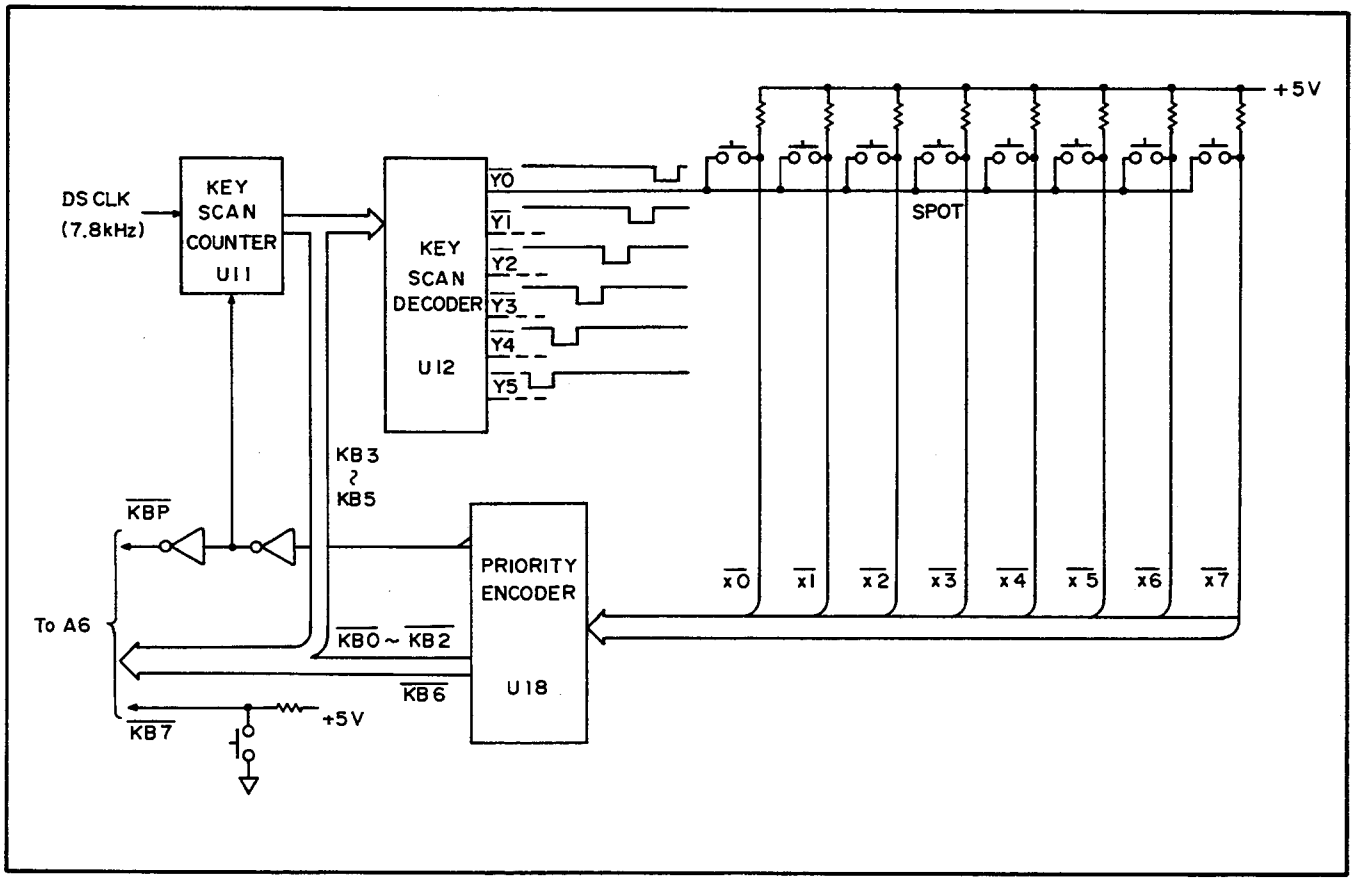


Figure 8-28. Matrix Keyboard Operating Principle.

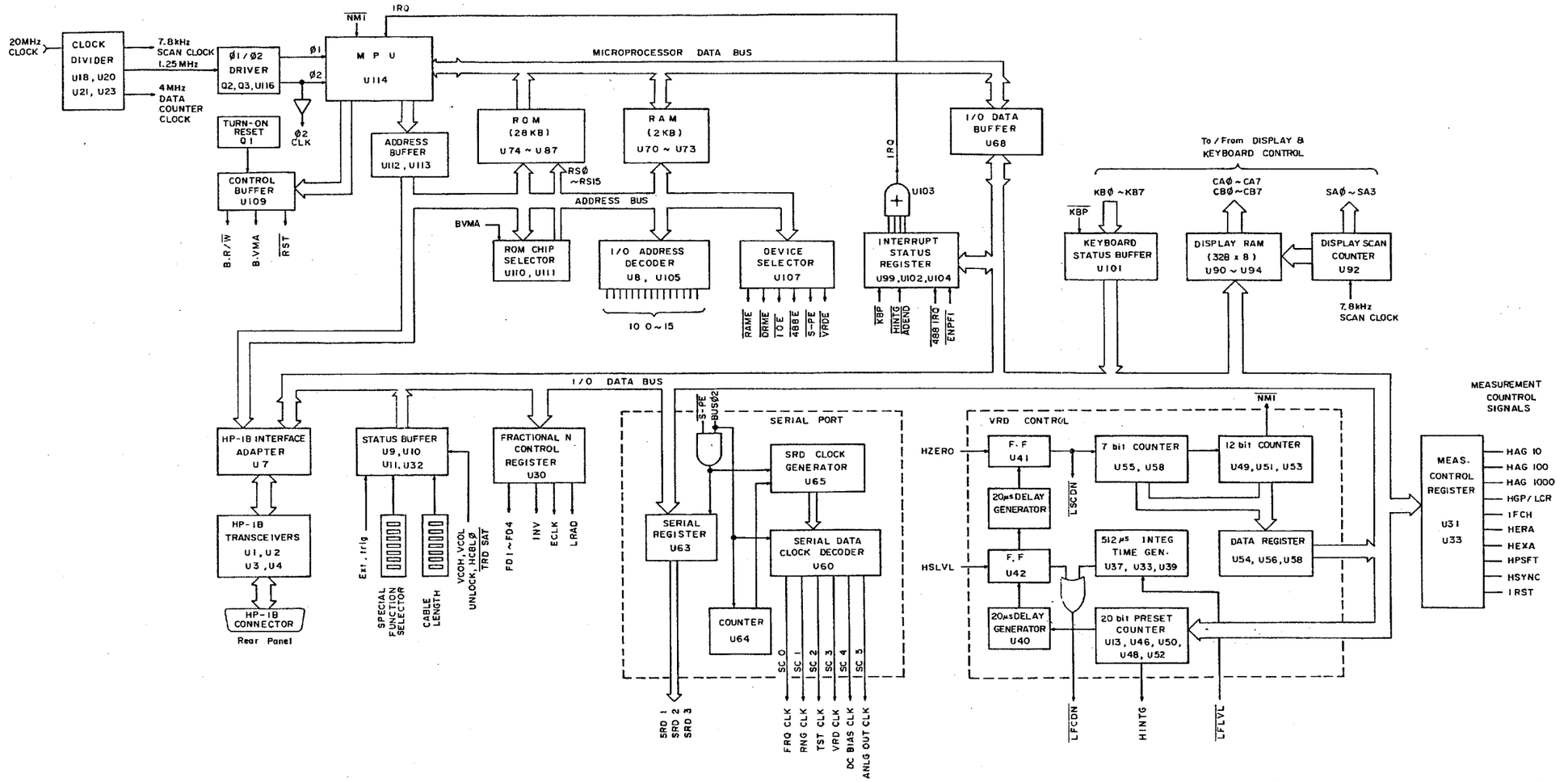


Figure 8-29. Digital Control Section Block Diagram — A6 Microprocessor Digital Control.

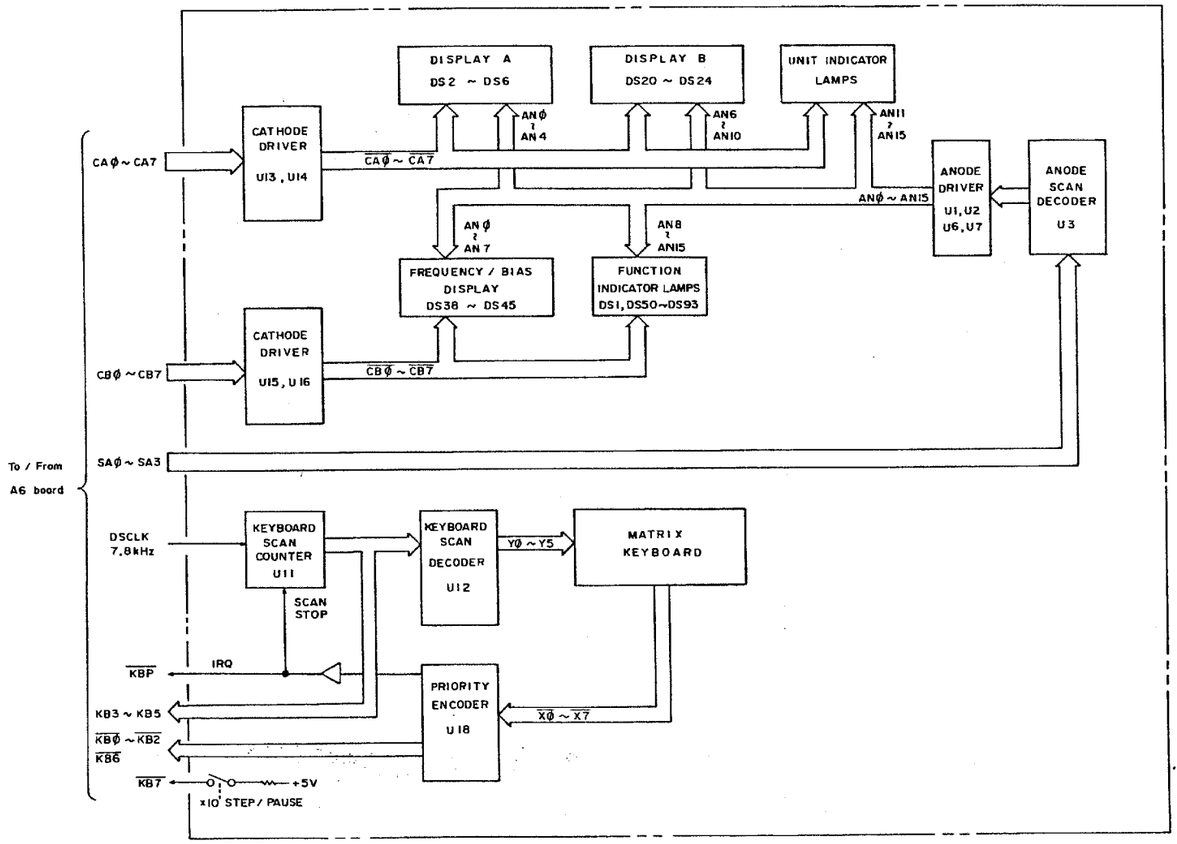


Figure 8-30. Digital Control Section Block Diagram — A5 Display and Keyboard Control.

8-96. TIMING DIAGRAM DISCUSSION

8-97. Figure 8-31 shows the waveforms and timing relationships of the measurement control signals in the basic measurement sequence. An explanation of the function and timing of the individual control signals is summarized in the Timing Diagram Notes. A brief discussion of the timing diagram is described below : When the instrument is triggered (internally or externally), the offset measurement period of the A-D Converter is initiated. To initiate the offset measurement cycle, the IRST, HINTG, LFCDN, HOLD 1, HOLD 2, and LSCDN signals from the digital control section actuate the A-D Converter on the timings shown in the diagram. During this period, the A-D Converter outputs the LFLVL, HSLVL, and HZERO signals required by the digital control section to manage the control sequence and to count the magnitude of the measured (residual offset) input. The periods when the 4MHz CLOCK GATE signal is HIGH are counted to determine the discharge quantity of the A-D Converter (equal to the magnitude of the input). After completion of the offset measurement cycle, the A-D Converter is operated four cycles to measure the orthogonal phase component voltages of the measurement vectors selected in accordance with the HEXB and HERA control signals. The HEXB and HERA signals control the timing to alternately select the two measurement vectors of the auto-balance bridge or of the amplitude-phase measurement inputs. Charge/discharge control for the A-D Converter is performed in the same manner for the five operating cycles, inclusive of the offset measurement. When the charge period of the Err (0 °)/CH.B (0 °) measurement cycle ends, the HPSFT signal actuates the phase shifter (on the A2 board) and delays the phase detector drive signal by 90 °. By selecting the measurement vectors four times in one measurement, the detection of the four phase components is accomplished with only one phase shift operation.

The analog measurement control shown in the diagram completes in 32ms, 120ms or 1020ms for high speed, normal or average measurement mode, respectively. Thereafter, the digital control section performs the necessary calculations to derive the parameter values and converts the data format into the display data. Typical data processing time for each measurement parameter is shown in Table 8-2.

Table 8-2. Digital Data Processing Time

| Measurement Parameter | Time |
|---|---|
| R-X, G-B | 23 to 25ms |
| $\|Z\| - \theta$ | 50 to 52ms |
| L-R/Q, C-D | 30 to 34ms |
| (B-A) - $\theta$ | 74 to 76ms |
| A, B | 55 to 57ms |

## TIMING DIAGRAM NOTES

1. HSYNC : Sets the phase angle of the phase detector to 0 degrees each time a measurement starts. The output timing of this signal is asynchronously controlled by the measurement program with other measurement sequence control signals. If this signal is not output, even though SELF TEST for the program memory (ROMs and RAMs) passes, A6U33 is probably faulty.

2. HSYNC signal pulse width : Approximately 50μs.

3. IRST : Goes HIGH approximately 100μs after the HSYNC signal is provided and goes LOW 500μs to reset the Multi-Slope A-D Converter after the offset measurement period is completed.

4. HINTG : When HIGH, this signal closes the multi-slope A-D converter input switch and controls the charge period of the A-D Converter.

5. HPSFT : SHifts the detection phase of the phase detector 90 degrees.

6. $\overline{\text{LFLVL}}$ : Output from the level comparator of the Multi-Slope A-D Converter when the charge voltage slope reaches the reference threshold level (-8V).

7. LFCDN : Goes LOW for 512μs to discharge the A-D Converter when the $\overline{\text{LFLVL}}$ signal is provided. This signal stays LOW during the fast discharge period of the A-D Converter.

8. HOLD 1 : Temporarily opens the A-D Converter input switch to prevent the A-D Converter from charging with the transient signal incident to change of the input signal.

9. HSLVL : Output from the level comparator of the Multi-Slope A-D Converter when the fast discharge voltage slope reaches the Slow Level (+7.83V).

10. HOLD 2 : Provides the second hold time to avoid transient input of the A-D Converter.

11. $\overline{\text{LSCDN}}$ : Causes the A-D Converter discharge current to decrease to 1/128 during the Slow Discharge period. This improves the resolution of the time counted to determine the discharge period, corresponding to the discharge current ratio.

12. HZERO : Output from the Zero Comparator of the Multi-Slope A-D Converter when the discharge voltage slope crosses the zero base level (+8V).

13. HEXB and HERA : Controls the signal selector switch of the Process Amplifier to alternately select the vector voltage across the DUT and across the range resistor in impedance measurements. In Amplitude-Phase measurements, the selection is made for the CHANNEL A and CHANNEL B input signals.

14. 4M CLOCK GATE : When HIGH, this signal causes the data counter to count the number of the 4MHz clock pulses. The counted number determines the discharge period of the A-D Converter.

15. TRD SAT DETECT : The microprocessor reads the state of the $\overline{\text{TRDSAT}}$ signal (A6U32 pin 18) at the timing of this signal to verify that the Auto-Balance Bridge circuit is balanced. If the $\overline{\text{TRDSAT}}$ line is LOW, "UCL" is displayed and the A-D Converter repeats the offset measurement cycle only.

16. VRD SAT DETECT : Output when the HZERO signal is generated during the A-D Converter charge period. The measurement sequence is reset to the initial condition.

17. Interim : During this period, the microprocessor performs the necessary calculations for the measured data obtained from the A-D Converter; approximately 2ms.

MEASUREMENT CONTROL TIMING DIAGRAM

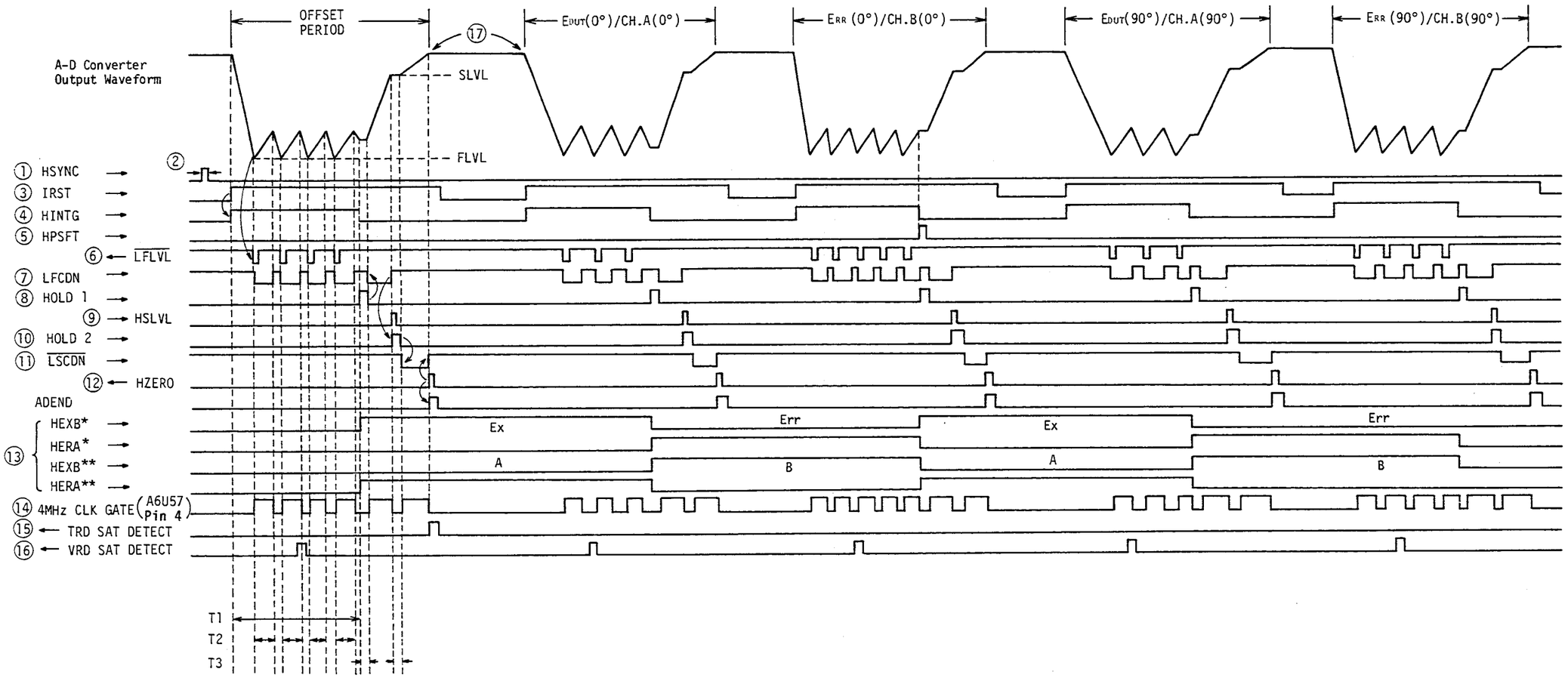


T1: Charge period
T2: 512µs
T3: 20µs Hold Time

*Impedance Measurement Mode
**Amplitude-Phase Measurement Mode

**Figure 8-31. Measurement Control Timing Diagram.**

## 8-98. TROUBLESHOOTING

8-99. The instructions and information for troubleshooting the 4192A are provided in the following paragraphs. Figure 8-32 "How to Use Troubleshooting Guides" is helpful when starting to troubleshoot the 4192A. The troubleshooting guides comprise four major steps, different for each level of the troubleshooting procedure. First, the troubleshooting guides describe the procedure to isolate a failure to the analog, digital or power supply circuit sections. In the subsequent steps, the troubleshooting guides proceed to the board assembly level and component level isolation. The instructions and diagrams provided as troubleshooting aids in each step are shown in the figure. An outline for how to perform troubleshooting is explained below:

1) Brief Checks for Symptom Verification.

First, verify the symptom on the instrument. If the display or control settings in the initial operating sequence do not occur just after the instrument is turned on, measure dc power supply voltages and, if an abnormality is found, troubleshoot the power supply section. If an error message display occurs, refer to Table 8-3 for the meaning of the message. If the power supply section is normal, proceed to step 2.

2) Analog and Digital Section Isolation Procedure.

Refer to "16343A Diagnostic Test Flow Diagram Notes" to understand usage of the 16343A Logic Test Box. To determine whether the failure is in the analog measurement section or in the digital control section, use Figure 8-36 "Diagnostic Test Flow Diagram".

Using various settings of the front-panel controls, check whether the control functions and displays are normal. The "Front-Panel Troubleshooting Guide," given in Table 8-4, lists the probable causes of failures related to typical symptoms on the front-panel controls and displays. This Guide is helpful in finding the location of failures at the level of the analog and digital section isolation.

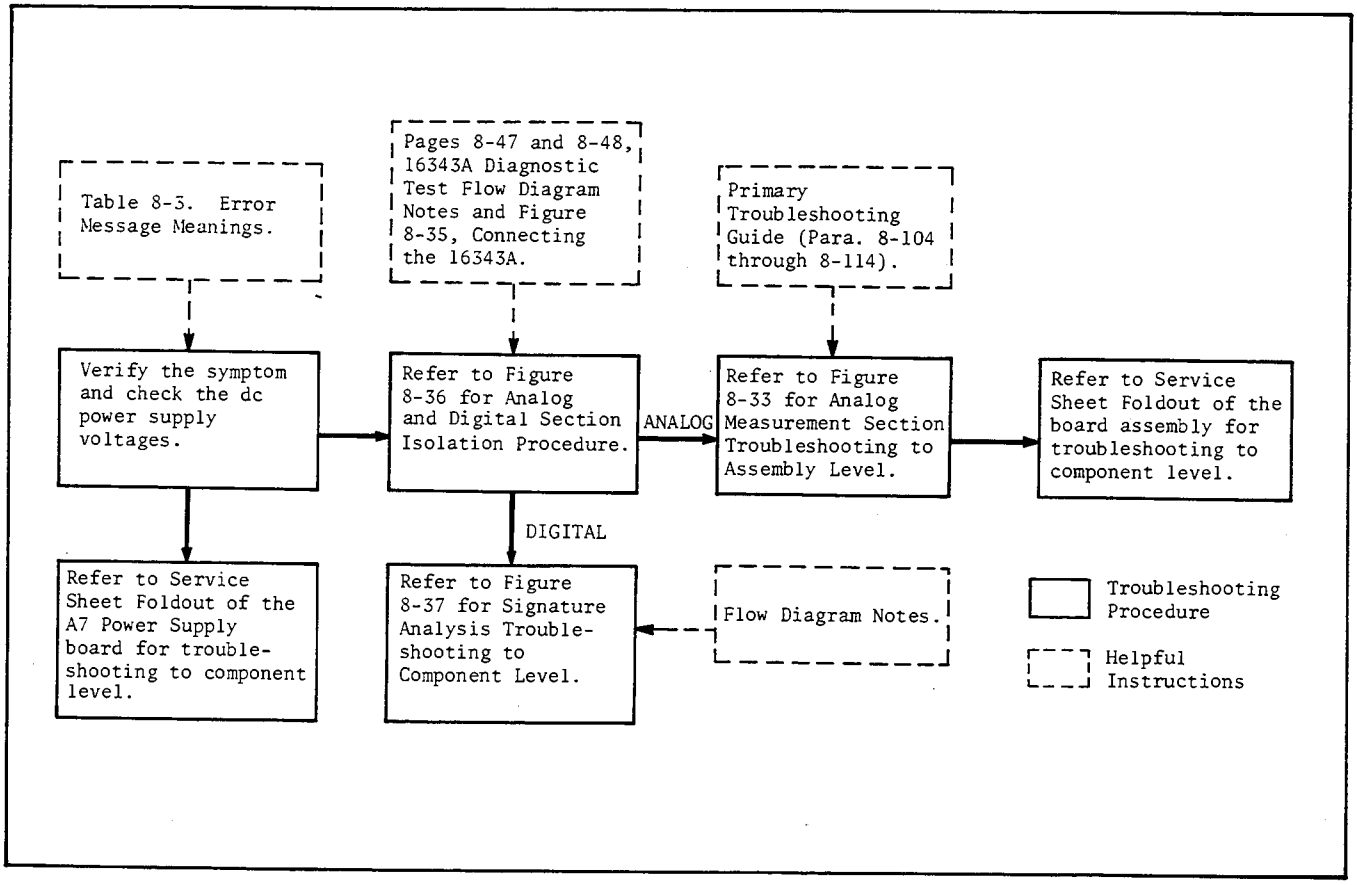


Figure 8-32. How to Use Troubleshooting Guides.

3) Troubleshooting Procedure to Assembly Level.

If the failure is in the analog section, first, use paragraphs 8-104 through 8-114 "Primary Troubleshooting Guide," which describes the key procedures to identify the defective circuit section. Next, proceed to Figure 8-33 "Analog Measurement Section Troubleshooting to Assembly Level." If the failure is identified in the digital control section, perform the procedure in step 4.

4) Troubleshooting Procedure to Component Level.

Perform troubleshooting for component level on each board. The troubleshooting guides for the analog circuit boards are provided on the Service Sheet foldouts for each individual board assembly.

If the failure is in the digital section, proceed to signature analysis troubleshooting. A brief description of the signature analysis method and usage of the 16343A Logic Test Box for the signature analysis test is provided on pages 8-47 and 8-48. The signature analysis troubleshooting procedure for overall digital control section (to component level) is given in Figures 8-36 and 8-37.

Table 8-3. 4192A Error Message Meanings

| Error Code | Indicated Condition | Operating Mode |
|---|---|---|
| E-20 | A6U72 or U73 RAM failure. | |
| E-21 | A6U70 or U71 RAM failure. | Measurement Mode or Self Test Mode |
| E-30 ≀ E-41 | ROM failure.<br>E-30: A6U85 E-37: A6U82<br>E-31: U83 E-38: U80<br>E-32: U81 E-39: U78<br>E-33: U79 E-40: U76<br>E-34: U77 E-41: U87<br>E-35: U75 E-42: U86<br>E-36: U84 E-43: U74 | |
| E-50 | The line frequency detection interrupt command is not output. | |
| E-51 | Detected line frequency is outside the normal frequency range (45Hz to 70Hz). | |
| E-61 | The Multi-slope A-D Converter (A2) is saturated. | |
| E-62 | The Multi-slope A-D Converter (A2) malfunctions or the charge time counter is not operating normally. | Self Test Mode only |
| E-70 | The Fractional N Frequency Synthesizer is malfunctioning (VCOH signal is HIGH). | |
| E-71 | The Fractional N Frequency Synthesizer is malfunctioning (VCOL signal is LOW). | |
| E-72 | The 40MHz VCXO signal is not locked to the frequency of the external reference signal. | |

Table 8-4. Front-Panel Troubleshooting Guide

| Symptom | Faulty Board |
|---|---|
| Numeric displays do not appear and pushbutton indicator lamps do not light. | A3, A6, A7 |
| Meaningless figures are displayed on the numeric displays. | A6 |
| A numeric display segment does not light or always lights. | A5 |
| Trigger ramp on DISPLAY A does not flash. | A3, A6 |
| The functions of the control keys are not executed. | A5, A6 |
| Incorrect initial control settings. | A6 |
| The function indicator lamps on the keys come on and off at random. | A6 |
| Impedance measurements are not made normally but Amplitude-Phase measurement functions are normal. | A1, A8, A12 |
| Test signal level is too low. | A1, A3, A4, A12 |
| Test signal level is too high. | A1, A12 |
| Measurement error increases on specific impedance range(s). | A1 |
| In impedance measurement, UCL is displayed at specific test frequency range(s). | A1 |
| Fluctuation of the measurement display output is abnormally large. | A4, A11, A3 |
| In Amplitude-Phase measurement, OF is always displayed regardless of the input signal level and measurement range. | A6 |
| Internal DC bias voltage is not applied to DUT. | A8, A1 (F1) |
| Internal bias voltage is different from the entered value. | A8 |
| Analog recorder output voltage is incorrect. | A9 |
| E-50 is displayed. | A7 |
| E-61 or E-62 is displayed. | A2, A6 |
| E-70 or E-71 is displayed. | A4 |
| E-73 is displayed. | A3 |

8-100. WARNINGS and CAUTIONS

8-101. For safety of service personnel who perform troubleshooting and for protection of the instrument against possible damage, attention should be given to all WARNINGS and CAUTIONS given throughout the troubleshooting and repair procedures.

CAUTION

The opening of covers or removal of parts, except those to which access can be gained by hand, is likely to expose live parts; in addition, accessible terminals may be live.

The instrument should be disconnected from all voltage sources before performing any adjustment, parts replacement or maintenance/repair for which the instrument must be opened.

If adjustment, maintenance, or repair must be performed with voltage applied, it should be performed by qualified service personnel aware of the hazards involved.

WARNING

WHENEVER IT IS LIKELY THAT THE PROTECTION PROVIDED BY THE FUSES HAS BEEN IMPAIRED, THE INSTRUMENT MUST BE MADE INOPERATIVE AND MUST BE SECURED AGAINST ANY UNINTENDED OPERATION.

CAUTION

Capacitors inside the instrument may maintain a charge even if the instrument has been disconnected from all voltage sources for an extended period. Be sure that only fuses of the required rated current and of the specified type are used for replacement. The use of mended fuses or short-circuiting of fuse holders must be avoided.

8-102. ANALOG SECTION TROUBLESHOOTING TO ASSEMBLY LEVEL

8-103. Flow diagram in Figure 8-33 shows the basic procedure used to troubleshoot the analog measurement section. The troubleshooting guide included in this diagram facilitates successful isolation of troubles to board assembly level, with simple, short procedures. When it is determined that the trouble is in the analog measurement section, follow the troubleshooting instructions given in the figure. The Primary Troubleshooting Guide, beginning in paragraph 8-104 and continuing through 8-114, explains the important methods which are keys to isolation of the trouble. After isolating the board assembly causing the trouble, refer to the foldout troubleshooting guide for the particular board assembly.

8-104. Primary Troubleshooting Guide

8-105. Trouble in the analog measurement section causes distinctive symptoms related to the function of the failing circuit. Paragraphs 8-106 through 8-114 describe the procedures to isolate the trouble by means of inspecting the symptom using various front-panel controls settings and observing the test signal, without removing the instrument top cover. These procedures are also used in the "Analog Measurement Section Troubleshooting to Assembly Level" to facilitate identification of the defective board assembly.

8-106. Isolation of the Signal Source

8-107. The clock signal required for timing control in the Digital Control Section is supplied from the A3 Reference Generator. If the initial control sequence and display do not occur and if the dc power supply voltages are normal, first check the 20MHz clock signal generated on the A3 board. A failure in the clock signal source makes it impossible to perform the analog and digital section isolation procedure using the 16343A Logic Test Box.

8-108. To verify whether the test signal source and the associated circuits are normal, perform as follows :

1) Connect the probe of an oscilloscope to the UNKNOWN $H_{CUR}$ terminal to observe the test signal.

2) Set the SPOT frequency and test signal level in accordance with the table below. Verify that the trace on the CRT is a stable sinusoidal and exhibits amplitude equal to the values given in the table.

| Frequency / Level | Amplitude | | |
|---|---|---|---|
| | 1V | 0.1V | 50mV |
| 99Hz | $2.8V_{p-p}$ | $0.28V_{p-p}$ | $0.14V_{p-p}$ |
| 9.99kHz | | | |
| 999kHz | 2.6Vp-p | 0.26Vp-p | 0.13Vp-p |

3) If the test signal is unstable or has an amplitude different by more than ±10% from the normal value given in the table, check the A1, A3, A4 and A12 boards.

If the frequency of the test signal seems to be periodically modulated (FM), check the A4 board.

Note

If the test signal level is extremely low, check the amplitude of the VCO OUTPUT (40M - 53MHz) on the rear panel. If the VCO OUTPUT level is about $0.5V_{p-p}$ ($0.25V_{p-p}$ when terminated with 50Ω), troubleshoot the A1 and A12 boards.

Note

If the test signal level is incorrect in either the impedance or amplitude-phase measurement, check A1K1 and its peripheral circuits.

If the test signal level is incorrect only when the setting is greater than 70mV or lower than 70mV, check A1K6 and its peripheral circuits.

4) Connect an 8-digit frequency counter to the $H_{CUR}$ terminal in place of the input probe of the oscilloscope.

5) Set the test signal level to 1V and frequency to 1MHz. The counter should display 1MHz±50Hz. Change the 10kHz, 1kHz, 100Hz, 10Hz, and 1Hz digits by one count and verify that the display readouts of the counter change correspondingly. If the display readouts of the counter do not correctly correspond to the changes in the SPOT frequency setting, troubleshoot the A4 board.

Note

When the test signal frequency is unstable, check the frequency of the 1MHz OUTPUT on the rear-panel. If stable, troubleshoot the A4 board. Otherwise, check the A3 board.

Note

It is also important to consider that the abnormality in the test signal caused by the A3 board is not related to the test frequency setting, whereas that caused by the A4 board tends to depend on the test frequency. For example, if the test signal is normal when the digits to the right of the 100kHz digit are zero, troubleshoot the A4 board.

8-109. Isolation of Trouble Causing UCL Display

8-110. In impedance measurements, if UCL display always occurs on DISPLAY A under appropriate control settings, the auto-balance bridge section is not operating normally. The cause of the trouble is in the balance control loop of the auto-balance bridge or in the circuit associated with the balance control.

Initially check the following :

1) Try to measure using another test fixture or test leads. Otherwise, connect a standard capacitor or a standard resistor as the DUT. If measurements are then made normally, check the test fixture or the test leads which caused the symptom.

2) Verify that the test signal level and frequency are normal. For the test signal test procedure, refer to the Isolation of the Signal Source described in paragraph 8-108.

3) Try to measure DUTs on the 1kΩ, 10kΩ and 100kΩ impedance ranges. If the symptom appears on specific range(s), refer to paragraph 8-112 Isolation of the Range Control Circuit.

4) Check whether the symptom is related to the test frequency settings. If the measurements can be made normally at specific frequency ranges, check the Phase Tracking Circuit on the A1 board.

When the instrument does not exhibit the symptoms described in steps 1, 2, 3 and 4, troubleshoot the A1 and the A12 boards using the Analog Section Isolation Procedure to Assembly Level (Figure 8-33).

8-111. Isolation of the Range Control Circuit

8-112. The relationship of the symptom to settings of the measurement range provides hints helpful in troubleshooting. When the trouble occurs at specific ranges only, the failure is in the circuits related to the range control function. Check the following circuits :

1) Range Resistor circuit on the A1 board.

2) Source Resistor circuit on the A1 board.

3) Two stage gain control attenuators in the Null Detector circuit on the A1 board.

4) Gain control attenuators in the IF Amplifiers (AG10, AG100, and AG1000 Amplifiers) on the A11 board.

Trouble caused by a failure on the A11 board can be distinguished from others by performing the procedure described in "Isolation of the VRD Section" (paragraph 8-113). A gain control error in the IF Amplifiers exhibits measurement display outputs which are 10 times (or 1/10) the correct values at specific ranges.

A failure in the Range Resistor, the Source Resistor, or the Null Detector circuit on the A1 board exhibits symptoms peculiar to the respective circuits and can be discriminated from others as outlined below :

1) If selection of the range resistor is not performed correctly, the measured values are normal only at the ranges where either the 100Ω, 1kΩ or 10kΩ range resistor is used. On the other hand, if the leakage by-pass circuit which eliminates the effect of the stray capacitance of an open circuited range resistor selection relay is faulty, measurement error on a specific range resistor setting increases at high frequencies. To check for this symptom, connect an appropriate standard resistor, useable over a broad frequency range, as the DUT and perform a swept frequency measurement on the range where the trouble was found. If measurement error increases (to the extent of 20%, maximum) with the increase in the test frequency, check the range resistor circuit for the above possibility. For detailed procedures, refer to the service sheet foldout for the A1 board.

2) Usually, a failure in the source resistor circuit causes an abnormality in the test signal level when a DUT is connected to the UNKNOWN terminals. As a unique symptom, it is possible that the measurements for small capacitor DUTs can not be accomplished at low frequencies (below about 1kHz).

To check the source resistors, short-circuit the UNKNOWN terminals and compare the test signal current (use the TEST LEVEL MONITOR mA function) with the typical values given in the table below. Use the following control settings :

SPOT FREQ ..... 1kHz
OSC LEVEL ..... 1V
ZY RANGE ..... MANUAL

| \|Z\| Range | Test Current |
|---|---|
| 1kΩ | 10mA |
| 10kΩ | 1mA |
| 100kΩ | 0.1mA |

If the readouts for the test signal current do not meet the above table, check the Source Resistor circuit.

3) The gain control attenuators in the Null Detector influence the balancing accuracy and the time required to automatically balance the bridge. If the attenuators are not controlled normally and the gain of the balance control loop becomes insufficient, accuracy of the measurement is somewhat affected. Depending on the measurement range, the additional measurement errors increase to the extent of 1%. As a peculiarity of the symptom, the measurement error does not exhibit an obvious dependency on the test frequency. Conversely, if the loop has excessive gain, there is the possibility of self-oscillation in the loop.

8-113. Isolation of the VRD Section (A11 and A2 Boards)

8-114. In amplitude-phase measurements, the A11 Process Amplifier and the A2 Phase Detector/A-D Converter perform the vector voltage ratio measurements for the input signals from the CHANNEL A and CHANNEL B INPUT terminals, instead of the signals from the auto-balance bridge circuit used in impedance measurements. Thus, the functions of the A11 and A2 boards can be tested using the amplitude--phase (B-A) measurement mode. Perform as follows:

1) Connect the power splitter, the 10dB step attenuator, and the 50Ω feed-through terminations as shown in the schematic below:

2) Set the test signal to 1V at 1kHz. Measure the amplitude ratios for each attenuator setting from 0dB to 80dB. Also, try to measure at 1MHz.

3) If the measured amplitude ratios are correct, the A11 and A2 boards are operating normally. Troubleshoot the A1 and A12 boards (the auto-balance bridge section).

Note

If the measured amplitude ratios differ 20dB (or 40dB) from the correct values at specific attenuator settings, check the IF Amplifier on the A11 board.
If this test fails on all the attenuator settings, try to measure a single channel input in A and, then, B mode. If measurement is normal in either A or B mode, check the Buffer Amplifier on the A11 board.

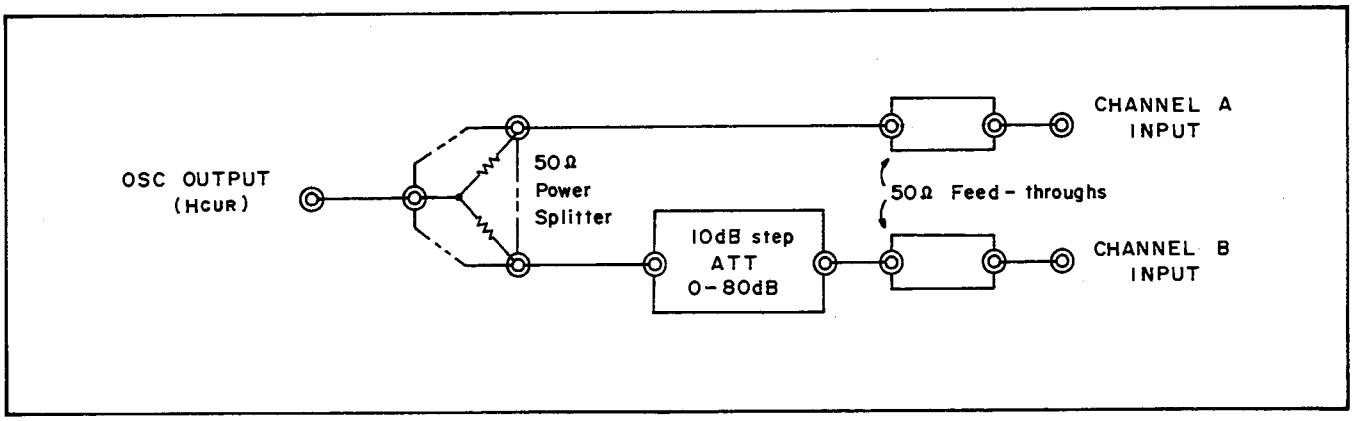

START

Initially, check the test signal using the instructions given in paragraph 8-108.

Is the test signal normal at all frequency and OSC LEVEL settings? YES → Perform the tests for B-A measurement. Use the procedure described in para 8-114.

NO

Is the VCO OUTPUT signal at the rear panel normal (0.7Vp-p)? Reconnect the VCO OUTPUT-EXT VCO connector before proceeding to the next step. YES → Is amplitude of the test signal at the base of A1Q25 as given in the table below? YES → Troubleshoot the A1 board ($H_{CUR}$ Power Amp). Refer to Service Sheet A1.

| OSC LEVEL | Level at J4 |
|---|---|
| 1V | 120mVp-p |
| 0.2V | 25mVp-p |

NO

Is the dc voltage at A1TP2 as given in the table below? YES → Troubleshoot the A12 board. Refer to Service Sheet A12.

| OSC LEVEL | A1TP2 |
|---|---|
| 1V | 3V ±0.3V |
| 0.2V | 0.6V ±0.06V |

NO

Troubleshoot A1 board (D-A Converter). Refer to Service Sheet A1.

NO

Is the signal at the collector of A3Q3 a 100kHz differentiated pulse as shown below? *See Nnte

YES → Troubleshoot A4 board. Refer to Service Sheet A4.

NO

Troubleshoot the A3 board. Refer to the Service Sheet A3.

Is B-A measurement function normal? YES → Perform setup for impedance measurements.

NO

Are the displayed values 20dB greater or lower than the correct values? YES → Troubleshoot the A11 board (IF Amp). Refer to Service Sheet A11.

NO

Disconnect input from channel A or channel B. Is either A or B measurement normal? YES → Troubleshoot the A11 board (Buffer Amp). Refer to Service Sheet A11.

NO

Connect the test signal to CHANNEL A input. Set the controls as follows:
Function ..... A
OSC LEVEL ..... 1V
Is the waveform at A11 TP1 as shown below? YES → Troubleshoot the A2 board. Refer to Service Sheet A2.

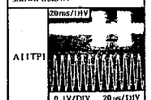


| SPOT FREQ | Period of IF |
|---|---|
| 100 kHz | 1.28µs |
| 78 kHz | 14.4µs |

NO

Go to (A) in this flow diagram.

Is UCL displayed on appropriate impedance ranges? YES → Does the symptom appear at specific test frequencies? YES → Does the frequency of the L LOAD signal at A3U2 pin 8 change as shown in the table below? YES → Troubleshoot A1 board (Phase Tracking circuit). Refer to Service Sheet A1.

| SPOT FREQ | U2 pin 8 |
|---|---|
| 69 kHz | 78.125 kHz (12.8µs) |
| 78 kHz | 69.444 kHz (14.4µs) |




NO

Troubleshoot the A3 board. Refer to Service Sheet A3.

NO

Set the ZY RANGE to 100Ω. Connect a 100Ω resistor between the $H_{CUR}$ and $L_{CUR}$ terminals ($H_{POT}$ and $L_{CUR}$ terminals are open). Set the test signal to 1kHz and 1V.

Repeat disconnecting and reconnecting the resistor. Does the dc voltage at A1U20 pin 1 change approx. −1.6V (when connected)? YES → Connect a 1µF capacitor in place of the 100Ω resistor. Manually sweep the test frequency from 500Hz to 1.5kHz in 100 Hz steps. Does the dc voltage at A1U20 pin 14 change between ±1.5V? YES → Troubleshoot the A12 board (Modulator and Mixer). Refer to Service Sheet A12.

NO

Are the signals at A1U31 pin 5 and U29 pin 12 as shown in the figure below?

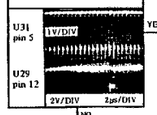


YES → Troubleshoot the A1 board (Phase Detector and Phase Tracking circuit). Refer to Service Sheet A1.

NO

Troubleshoot the A3 board. Refer to Service Sheet A3.

NO

Does the symptom occur at specific range(s)? Refer to the instructions given in para 8-112. YES → Troubleshoot the A1 board (Range Resistors, Null Detector and Source Resistor Circuits). Refer to Service Sheet A1.

NO

Troubleshoot the A1 board (Null Detector). Refer to Service Sheet A1.

(A)

Is the signal at A11U16 pin 2 a 1Vp-p sinusoidal waveform at the frequency equal to (test freq +*IF)? YES → Troubleshoot the A11 board (Mixer and IF Amp). Refer to Service Sheet A11.

*IF = 78.125 kHz or 69.444 kHz.

NO

Is the signal at A3 J10 (L17) a 1.2Vp-p sinusoidal waveform at the frequency equal to (40M-IF)? YES → Troubleshoot the A12 board (LCL Mixer Circuit). Refer to Service Sheet A12.

NO

Troubleshoot the A3 board (Summing Loop). Refer to Service Sheet A3.

Figure 8-33. Analog Measurement Section Troubleshooting to Assembly Level.

## FLOW DIAGRAM NOTES

16343A Diagnostic Test Flow Diagram Notes

The Diagnostic Test Flow Diagram given in Figure 8-36 provides component-level diagnosis of failures in the 4192A's Digital Section (A5 Display and Keyboard Control Board and A6 Digital Control Board). It also provides isolation of instrument failures to the Analog Section or the Digital Section, and, thus, should be the first step in troubleshooting any instrument failure.

To perform the Diagnostic Test, connect the 16343A to the 4192A as described in Figure 8-35 and proceed to the Diagnostic Test Flow Diagram. Follow the instructions given in the flow diagram. If a failure exists in the Digital Section, an error will be displayed on DISPLAY C and the test will stop. The flow diagram will then instruct you to:

(1) Replace Component

Replace the indicated component.

(2) Check Component

Check the indicated component and the adjacent circuitry.

(3) Go to Flow Diagram

Proceed to the indicated Signature Analysis Flow Diagram. Leave all switch settings and connections as they are.

(4) Return to START and if .....

After replacing or checking a component, it is necessary to perform a confirmation check. To do this, return to START and perform the test again. If the same error occurs, go to the indicated flow diagram.

If no error messages appear and P-77 is displayed at the end of the test, the Digital Section is functioning normally. Hence, the failure is in the Analog Section. Disconnect the 16343A, reconnect all cables, remove the Test Program ROM's, reinstall U74 and U85, and return all switches to their initial settings. Then proceed to the Analog Section Troubleshooting Flow Diagrams.

Note: For normal operation, all bits of A6S2 are set to 0; S4, S5, and S6 are set to N; and the setting for A6S1 is determined by the cable length adjustment in paragraph 5-45.

Note: Before performing the test, note the setting of A6S1. This switch is used for cable length compensation; if the setting is lost, perform the cable length adjustment given in paragraph 5-45.

There are two optional functions in the diagnostic test: Error Skip and Display Test.

Error Skip:
There may be cases where the same error persists after you have performed component replacement or troubleshooting as instructed in the flow diagram. If this occurs, use the Error Skip function when it is made available in the flow diagram. (This function is only accessible at a point midway through the flow diagram. It is not available for the first half of the flow diagram. With the Error Skip function set to on, the test does not stop when an error is detected, it displays the detected error for approximately 0.5 seconds, then proceeds to the next step. This allows you to observe all errors from E-22 to E-61.

## FLOW DIAGRAM NOTES

Display Test:

Like the Error Skip function, the Display Test function is accessible at a point midway through the flow diagram. With the Display Test function set to on, all front-panel lamps and display segments repeatedly flash until the bit switch that controls this function is set to off.

The Diagnostic Test can be initiated only from START. Also, if an error occurs for any reason—actual or as a result of mis-operation—the test will stop, it cannot be continued from that point. You must return to START.

## SIGNATURE ANALYSIS TEST

Signature Analysis is used to troubleshoot the Digital Section of the 4192A. (If you are not familiar with Signature Analysis, refer to Figure 8-34. It gives a brief description of the technique.) There are twenty-one signature analysis flow diagrams, numbered 1 through 21, diverging from the 16343A Diagnostic Test Flow Diagram. These flow diagrams contain the instructions, signature analyzer control settings, and signature analyzer probe and connection points necessary for component-level troubleshooting of failures found by the Diagnostic Test Flow Diagram.

To perform signature analysis, first use the 16343A Diagnostic Test Flow Diagram. If an error occurs during this test, you will be instructed either to replace a component or to go to one of the signature analysis flow diagrams. If you are instructed to do the latter, leave all switch settings and connections as they are, proceed directly to the indicated flow diagram, and continue from there.

Some of the signature flow diagrams can be accessed directly; that is, without using the 16343A Diagnostic Test Flow Diagram. Flow diagrams that are directly accessible are indicated by an asterisk in the list given on page 8-51. To use any of these flow diagrams, you must:

1. Turn the 4192A off,
2. Set A6S2 to the setting shown at the start of the flow diagram,
3. Turn the 4192A on (P-01 followed by E-15 will be displayed), and
4. Briefly connect pin 6 of A6U114 ($\overline{\text{NMI}}$) to ground.

The signature analysis test number will appear on DISPLAY C in the form of SA-followed by a two-digit number. If not, try again from step 1.

## Signature Analysis

Signature Analysis is a unique technique for component-level troubleshooting. The signature analyzer detects and displays the unique digital signature of the data at a given node in the circuit under test. By comparing the actual signature to the correct one, the service technician can quickly back-trace to the faulty node, and, ultimately, to the faulty component. To represent the signature, a nonstandard character set (123456789 ACFHPU) was chosen for easy readability and compatibility with 7-segment displays.

Stated simply, the signature analyzer displays a compressed four-digit "fingerprint" of the data stream present at a node. This "fingerprint" is unique for a good node. Any fault associated with a device on that node will force a change in the data stream and, consequently, result in an incorrect signature. If, for examdple, the signature at the input of a device is correct but the signature at the output is not, the device is regarded as faulty and should be replaced.

This technique is especially useful in troubleshooting microprocessor based instruments like the 4192A, where data streams are long and complex and where there are no conventional means to efficiently troubleshoot to the component level.

Signature Analysis for the 4192A requires the Model 16343A Logic Test Box and two test program ROM's (furnished with the 16343A). With the 16343A connected to the 4192A and the test ROM's installed, the signature analyzer's active logic probe and active pod detect and develop the signature for display on the signature analyzer. The logic probe is applied to the desired node in the circuit under test and transfers the data to the signature analyzer. The four leads on the active pod are connected to appropriate points on the 4192A, and provide the necessary START, STOP, and CLOCK signals and GND reference. The START signal opens the measurement "window" and instructs the signature analyzer to prepare to receive data from the logic probe; the STOP signal closes the "window." The CLOCK signal provides the appropriate measurement timing pulses. Probe points; connection locations for START, STOP, and CLOCK; and control settings for the signature analyzer are given in the troubleshooting flow diagrams.

MEASUREMENT GATING EXAMPLE, POSITIVE EDGE START, STOP, AND CLOCK

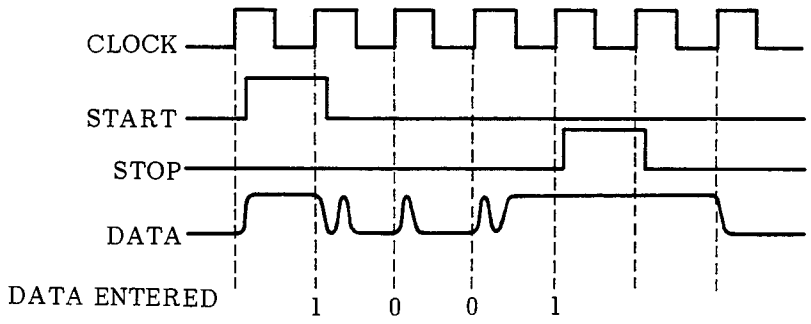


Figure 8-34. Signature Analysis

## FLOW DIAGRAM NOTES

Signature Analysis Flow Diagram Notes

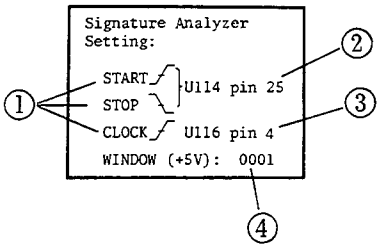


(1) Set the Signature Analyzer's START, STOP, and CLOCK controls to positive-going (⨍: OUT) or negative-going (⨏: IN), as indicated.

(2) Connect both the START and STOP input leads on the Signature Analyzer's active pod to A6U114 pin 25.

(3) Connect the CLOCK input lead on the Signature Analyzer's active pod to A6U116 pin 4.

(4) This is the signature for the window test (+5V). It should be displayed on the signature analyzer. If the correct signature is not displayed, press the RESET button on the probe. If it is still incorrect, check the component from which the window signal or clock signal is taken. In this example, U114 and U116.

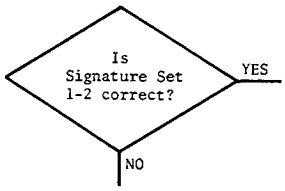


Check the signatures in accordance with the table titled Signature Set 1-2. The table is included in the flow diagram.

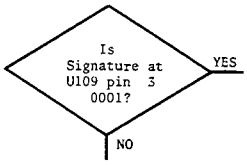


Check that the signature at U109 pin 3 is 0001.

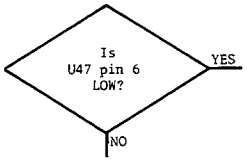


Check that the logic level at U47 pin 6 is LOW.

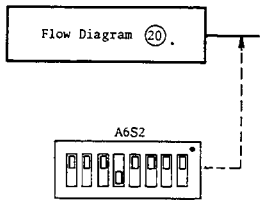


At the start of some flow diagrams, a setting for A6S2 is given, as shown here. This switch setting is to be used only when initiating the flow diagram directly, not when coming from the Diagnostic Test Flow Diagram. Refer to page 8-48 for the direct access procedure.

Signature Analysis Flow Diagrams

| | Name | Purpose |
|---|---|---|
| | Flow Diagram (1) | Checks all ROM's |
| | Flow Diagram (2) | Checks the Display and Buffered Data Busses |
| | Flow Diagram (3) | Checks that switch settings are read correctly |
| | Flow Diagram (4) | Checks display RAM's |
| | Flow Diagram (5) | Checks display RAM's |
| | Flow Diagram (6) | Checks Display |
| * | Flow Diagram (7) | Checks signals to RAM's |
| * | Flow Diagram (8) | Checks the IRQ signal from the Keyboard |
| | Flow Diagram (9) | Checks the Keyboard |
| * | Flow Diagram (10) | Checks the HP-IB address |
| * | Flow Diagram (11) | Checks Measurement Control Register (U31) |
| * | Flow Diagram (12) | Checks Fractional N Control Register (U30) |
| * | Flow Diagram (13) | Checks Measurement Control Register (U33) |
| * | Flow Diagram (14) | Serial Port Check |
| * | Flow Diagram (15) | Checks Status Buffer (U32) |
| * | Flow Diagram (16) | Checks all CNTR's for the Process Amplifier |
| * | Flow Diagram (17) | Checks the $\overline{\text{HINTG}}$ and $\overline{\text{ADEND}}$ signals |
| * | Flow Diagram (18) | Checks controls for the Process Amplifier |
| * | Flow Diagram (19) | Checks the EXT. TRIGGER |
| * | Flow Diagram (20) | Checks Data Registor (U54) |
| * | Flow Diagram (21) | Checks the LF signal |

Note: * indicates that this flow diagram can be initiated without using the Diagnostic Test Flow Diagram.

Connecting the 16343A

PROCEDURE

a. Turn the 4192A off.

b. Remove the top cover.

c. Raise the top mounting plate. Refer to paragraph 5-15 for the procedure.

d. Disconnect the cables from A6J1, J2, J3, J4, J5, and J8. Do not disconnect the cable from A6J7.

e. Place the 16343A across the 4192A, as shown in the figure below.

f. Connect the cables of the 16343A to A6J1, J2,J3, J4, J5, and J8 in accordance with the instructions labeled on the 16343A.

g. Connect the coaxial cable (from A3J4) that was disconnected from A6J8 in step d to J9 on the 16343A.

h. Remove A6U74 and U85.

i. Install the two furnished test program ROM's into the U74 and U85 sockets.

(1) P/N 16343-85001 into U74
(2) P/N 16343-85002 into U85

CAUTION

IMPROPER HANDLING OR INCORRECT INSTALLATION OF THE TEST PROGRAM ROM'S MAY DESTROY THE STORED PROGRAMS.

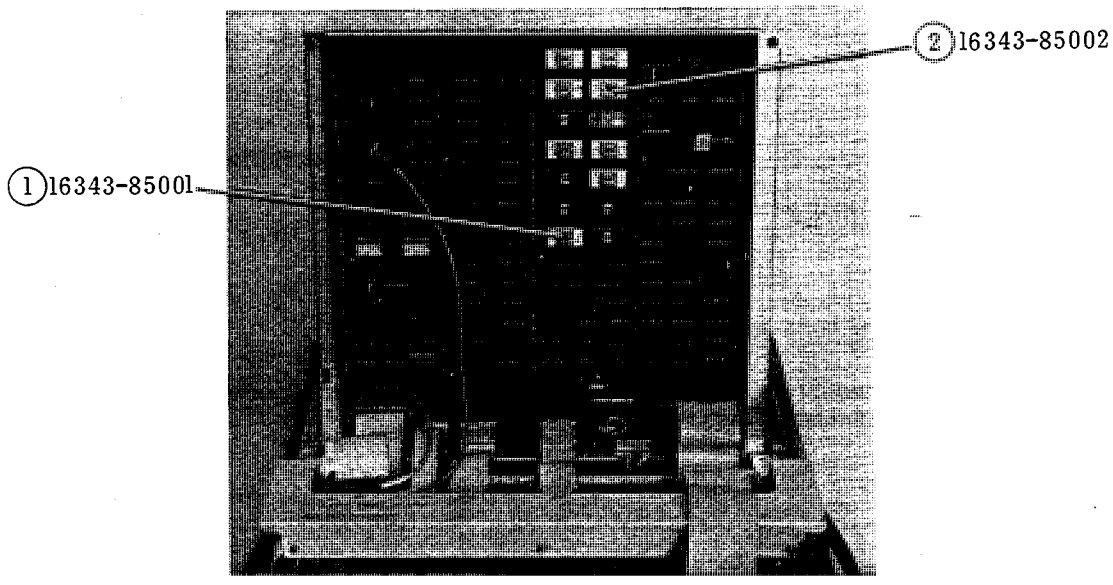


Figure 8-35. 16343A Connection

## Diagnostic Test Flow Diagram

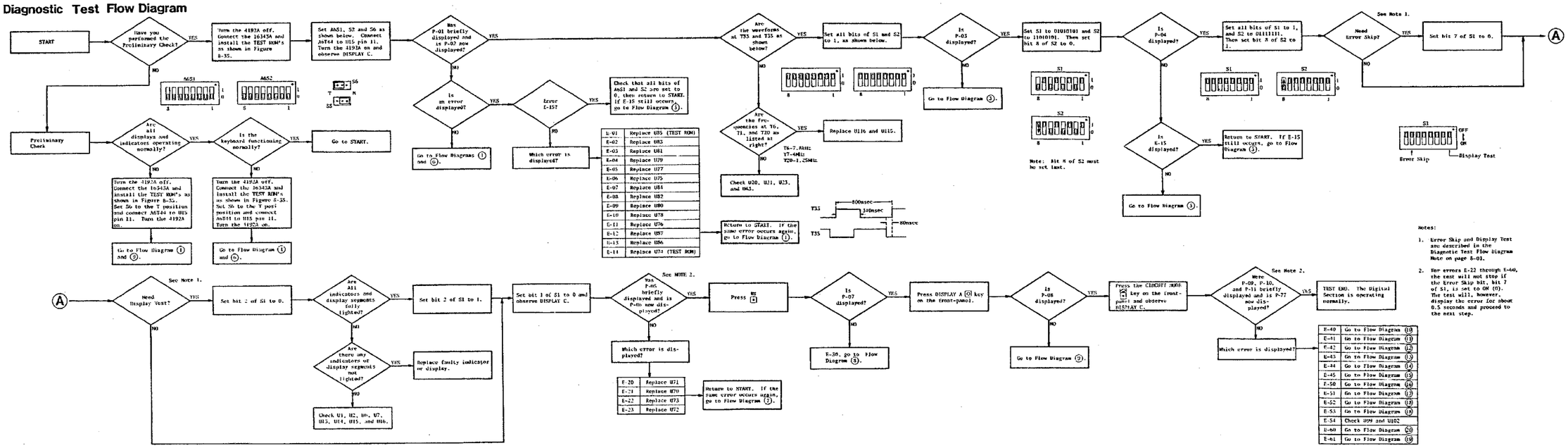


Figure 8-36. Diagnostic Test Flow Diagram. (Analog and Digital Section Isolation Procedure)

## Flow Diagram (1)

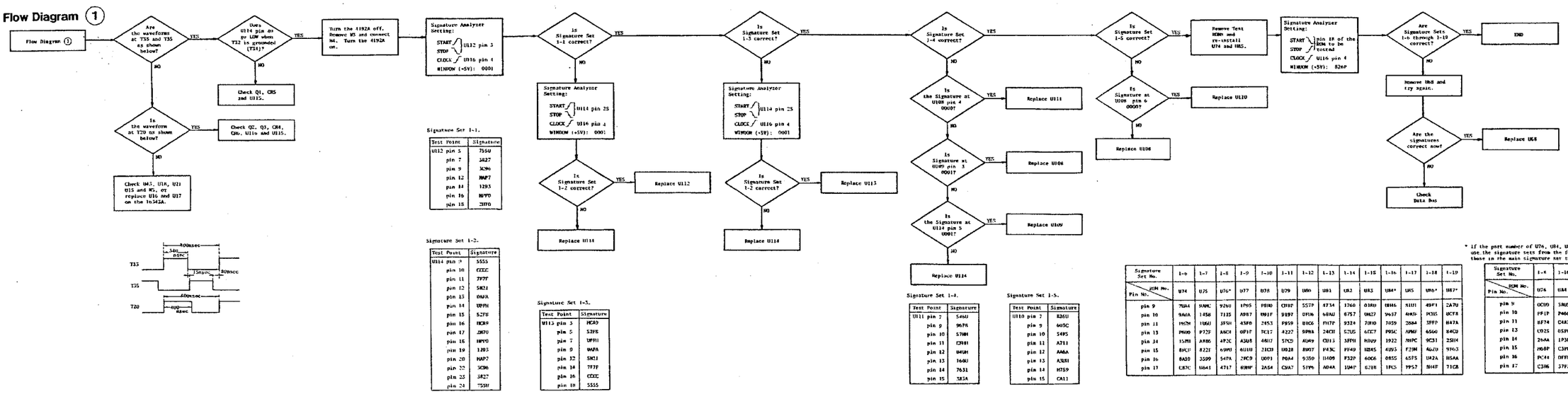





Signature Set 1-1.

| Test Point | Signature |
|---|---|
| U112 pin 5 | 7550 |
| pin 7 | 5827 |
| pin 9 | 3C96 |
| pin 12 | HAP7 |
| pin 14 | 1293 |
| pin 16 | H9Y0 |
| pin 18 | 2370 |

Signature Set 1-2.

| Test Point | Signature |
|---|---|
| U114 pin 9 | 5555 |
| pin 10 | CCCC |
| pin 11 | 7F7F |
| pin 12 | 5HJ1 |
| pin 13 | 0AFA |
| pin 14 | UPPH |
| pin 15 | 527H |
| pin 16 | HC89 |
| pin 17 | 2H70 |
| pin 18 | H9Y0 |
| pin 19 | 1293 |
| pin 20 | HAP2 |
| pin 22 | 5C96 |
| pin 23 | 5827 |
| pin 24 | 7550 |

Signature Set 1-3.

| Test Point | Signature |
|---|---|
| U113 pin 3 | HC89 |
| pin 5 | 529H |
| pin 7 | UPPH |
| pin 9 | 0AFA |
| pin 12 | 5HJ1 |
| pin 14 | 7F7F |
| pin 16 | CCCC |
| pin 18 | 5555 |

Signature Set 1-4.

| Test Point | Signature |
|---|---|
| U111 pin 7 | 5460 |
| pin 9 | 96PR |
| pin 10 | 57HH |
| pin 11 | C2H1 |
| pin 12 | 0HSH |
| pin 13 | 1600 |
| pin 14 | 7631 |
| pin 15 | 3B5A |

Signature Set 1-5.

| Test Point | Signature |
|---|---|
| U110 pin 7 | R26U |
| pin 9 | 605C |
| pin 10 | 54P5 |
| pin 11 | A711 |
| pin 12 | A46A |
| pin 13 | A3U8H |
| pin 14 | H7S9 |
| pin 15 | CA11 |

* If the part number of U76, U84, U86, or U87 is 64192-85XXX, use the signature sets from the following table instead of those in the main signature set table.

| Signature Set No. | 1-6 | 1-7 | 1-8 | 1-9 | 1-10 | 1-11 | 1-12 | 1-13 | 1-14 | 1-15 | 1-16 | 1-17 | 1-18 | 1-19 |
|---|---|---|---|---|---|---|---|---|---|---|---|---|---|---|
| ROM No. / Pin No. | U74 | U75 | U76* | U77 | U78 | U79 | U80 | U81 | U82 | U83 | U84* | U85 | U86* | U87* |
| pin 9 | 7UA4 | 9AMC | 92G0 | 1P05 | P8H0 | CH1F | 5S7P | 8734 | 1760 | 01R0 | 8H46 | 81U1 | 49F1 | 2A7U |
| pin 10 | 9A0A | 1458 | 7135 | A987 | 6911F | 9197 | DP1H | 68AU | 6757 | 0H27 | 9637 | 4H3U | P435 | 6CFA |
| pin 11 | 1H7H | 1G6J | 3F5H | 43F0 | 2453 | F959 | 81G6 | FH7P | 9324 | 7H90 | 7659 | 2B8A | 3FF9 | 847A |
| pin 13 | P6H0 | P32P | A0C4 | 0F1F | 7C17 | 4227 | 09HA | 24CH | C2U5 | 4JC7 | P85C | AP6F | 6566 | 84CU |
| pin 14 | 15P1 | AR86 | 4P2C | A3U8 | 4617 | 57C9 | A049 | CH15 | 3FP1 | H1U9 | 1922 | 98PC | 9C31 | 2SH4 |
| pin 15 | 83CF | 8221 | 69MU | 61U0 | 23C3 | U028 | 8907 | P43C | F949 | H2R5 | 4U93 | F29M | 4620 | 9763 |
| pin 16 | 8A30 | 3599 | 547A | 29C9 | U091 | P0A4 | 9350 | 11409 | F32P | 6006 | 0855 | 65P5 | 1H2A | H5AA |
| pin 17 | C87C | 1664 | 4717 | 89MP | 2A54 | C9A7 | 57P6 | A04A | 1U4P | 6218 | 1PC5 | 9957 | 5H4F | 71CA |

| Signature Set No. | 1-6 | 1-16 | 1-18 | 1-19 |
|---|---|---|---|---|
| ROM No. / Pin No. | U76 | U84 | U86 | U87 |
| pin 9 | 0C09 | 5N05 | FU58 | C095 |
| pin 10 | FF1P | P466 | C67V | 0473 |
| pin 11 | 8F7A | CA87 | U90P | 076A |
| pin 13 | U925 | 05PR | F0U4 | 93F1 |
| pin 14 | 264A | 1P3P | A099 | 70P2 |
| pin 15 | P68P | C3P8 | C713 | 4730 |
| pin 16 | PC44 | DFH1 | 1404 | 4643 |
| pin 17 | C3H6 | 27F2 | 72b7 | A97H |

Figure 8-37. Signature Analysis Troubleshooting Flow Diagram – sheet 1 of 13.

## Flow Diagram (2)

Flow Diagram (2)

Is the waveform at T26 as shown below? YES / NO

Are the waveforms at A5U3 pins 1 through 11 and 13 through 17 as shown below? YES / NO

Check U92, U97, and A5U3.

Is the waveform at T6 as shown below? YES / NO

Check S4, U98 and U117

Check U20 and U23

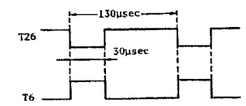


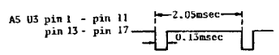


Turn the 4192A off and remove U90, U91, U93 and U94. Turn the 4192A on.

Are the points listed in Tables 1 and 2 at the correct logic levels (HIGH/LOW)? See Note. YES / NO

Replace any IC listed in Table 1 or 2 that did not respond correctly.

Note

1. All IC's listed in Tables 1 and 2 are on the A5 board.
2. Points listed in the left-most column of Table 2 must be grounded to obtain the correct logic levels. No ground connections are necessary for the points listed in Table 1.
3. HIGH in Table 2 is approximately 1V.

Table 1

| HIGH (5V) | LOW |
|---|---|
| U13 pin 1 | U 8 pin 4 |
| U13 pin 7 | U 8 pin 6 |
| U13 pin 8 | U 8 pin 8 |
| U13 pin 14 | U 8 pin 10 |
| U14 pin 1 | U 8 pin 12 |
| U14 pin 7 | U 9 pin 2 |
| U14 pin 8 | U 9 pin 4 |
| U14 pin 14 | U 9 pin 6 |
| U15 pin 1 | U 9 pin 8 |
| U15 pin 7 | U 9 pin 10 |
| U15 pin 8 | U 9 pin 12 |
| U15 pin 14 | U10 pin 4 |
| U16 pin 1 | U10 pin 6 |
| U16 pin 7 | U10 pin 8 |
| U16 pin 8 | U10 pin 10 |
| U16 pin 14 | U10 pin 12 |

Table 2

| Connect to Ground | HIGH (1V) | LOW |
|---|---|---|
| U8 pin 3 | U8 pin 4 | U13 pin 1 |
| U8 pin 5 | U8 pin 6 | U14 pin 1 |
| U8 pin 9 | U8 pin 8 | U14 pin 7 |
| U8 pin 11 | U8 pin 10 | U13 pin 14 |
| U8 pin 13 | U8 pin 12 | U13 pin 7 |
| U9 pin 1 | U9 pin 2 | U15 pin 1 |
| U9 pin 3 | U9 pin 4 | U15 pin 7 |
| U9 pin 5 | U9 pin 6 | U14 pin 14 |
| U9 pin 9 | U9 pin 8 | U15 pin 8 |
| U9 pin 11 | U9 pin 10 | U13 pin 8 |
| U9 pin 13 | U9 pin 12 | U14 pin 8 |
| U10 pin 3 | U10 pin 4 | U15 pin 14 |
| U10 pin 5 | U10 pin 6 | U16 pin 7 |
| U10 pin 9 | U10 pin 8 | U16 pin 14 |
| U10 pin 11 | U10 pin 10 | U16 pin 8 |
| U10 pin 13 | U10 pin 12 | U16 pin 1 |

Signature Analyzer Setting:
START, STOP } U112 pin 3
CLOCK U116 pin 4
WINDOW (+5V): 0001

Is Signature Set 2-1 correct? YES / NO

Is the Signature at U109 pin 5 0001? YES / NO

Check U109 and U114

Is the Signature at U108 pin 12 5U8C? YES / NO

Is Signature Set 2-2 correct? YES / NO

Check U96 and U97

Replace U107

Is Signature Set 2-2 correct? YES / NO

Check U108 and U106

Replace U107

(A)

Turn the 4192A off and reinstall W3 and remove W4. Set all bits of A6S2 to 1. Turn the 4192A on.

Signature Analyzer Setting:
START, STOP } U93 pin 5
CLOCK U116 pin 4
WINDOW (+5V): Any

Briefly connect U114 pin 6 (RBI) to ground. WINDOW should become 0001.

Is Signature Set 2-3 correct? YES / NO

Replace U10, and return to START. If still come here, check Buffered Data Bus.

Signature Analyzer Setting:
START, STOP } U93 pin 3
CLOCK U116 pin 4
WINDOW (+5V): 0001

Is Signature Set 2-4 correct? YES / NO

Replace U68, and return to START of the Diagnostic Test Flow Diagram. If Signature Set 2-4 or 2-5 is still incorrect, check the Buffered Data Bus.

Signature Analyzer Setting:
START, STOP } U90 pin 3
CLOCK U116 pin 4
WINDOW (+5V): 0001

Is Signature Set 2-5 correct? YES / NO

Return to Flow Diagram (6).

Signature Set 2-1.

| Test Point | Signature |
|---|---|
| U36 pin 6 | 3A1F |
| pin 8 | 28PP |

Signature Set 2-2.

| Test Point | Signature |
|---|---|
| U107 pin 7 | P255 |
| pin 9 | U3H5 |
| pin 10 | U99G |
| pin 11 | 6H49 |
| pin 12 | F2A6 |
| pin 13 | PC01 |
| pin 14 | 12U3 |
| pin 15 | 4P0A |

Signature Set 2-3.

| Test Point | Signature |
|---|---|
| U10 pin 3 | 0001 |
| pin 5 | 0001 |
| pin 7 | 0001 |
| pin 9 | 0001 |
| pin 11 | 0001 |
| pin 13 | 0001 |
| pin 15 | 0001 |
| pin 17 | 0001 |

Signature Set 2-4.

| Test Point | Signature |
|---|---|
| U68 pin 2 | 0000 |
| pin 3 | 0001 |
| pin 4 | 0000 |
| pin 5 | 0001 |
| pin 6 | 0000 |
| pin 7 | 0001 |
| pin 8 | 0000 |
| pin 9 | 0001 |

Signature Set 2-5.

| Test Point | Signature |
|---|---|
| U68 pin 2 | 0001 |
| pin 2 | 0000 |
| pin 4 | 0001 |
| pin 5 | 0000 |
| pin 6 | 0001 |
| pin 7 | 0000 |
| pin 8 | 0001 |
| pin 9 | 0000 |

Figure 8-37. Signature Analysis Troubleshooting Flow Diagram — sheet 2 of 13.

## Flow Diagram (3)

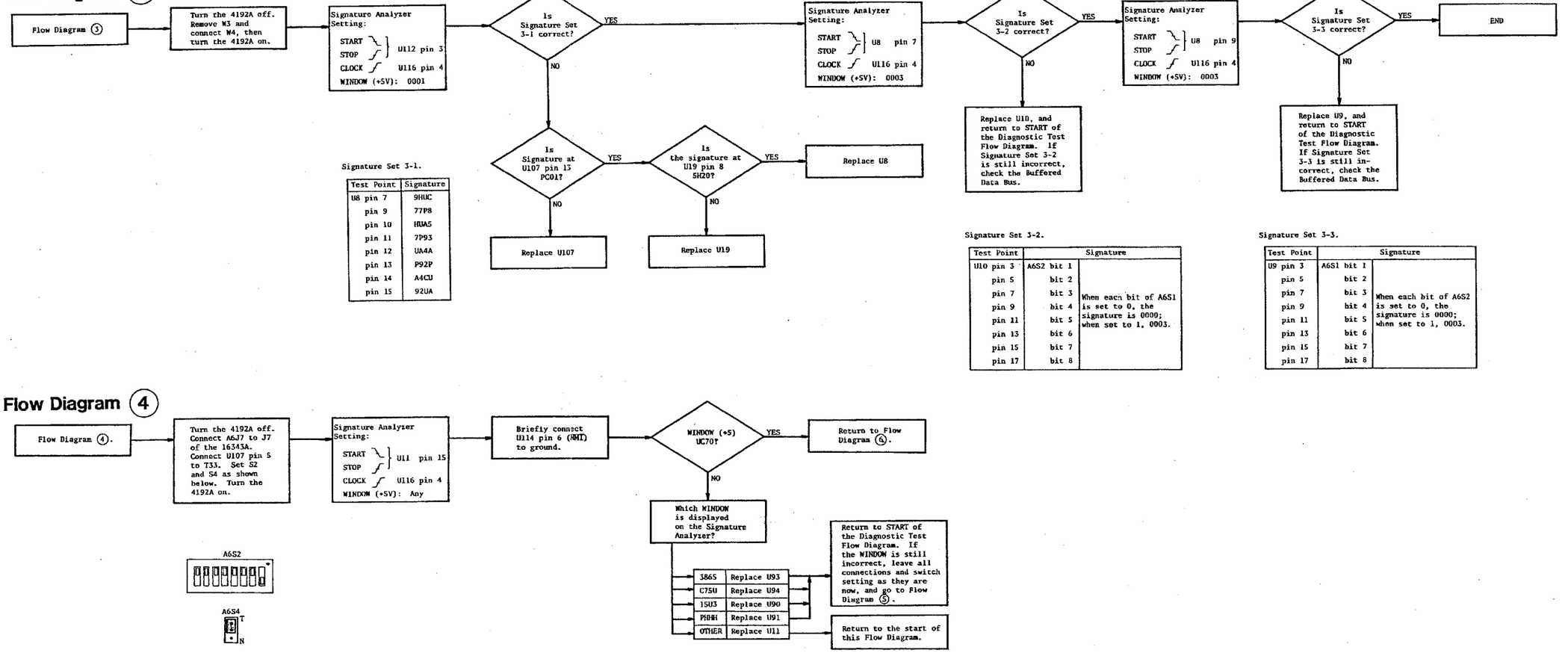


Signature Set 3-1.

| Test Point | Signature |
|---|---|
| U8 pin 7 | 9HUC |
| pin 9 | 77P8 |
| pin 10 | HUA5 |
| pin 11 | 7P93 |
| pin 12 | UA4A |
| pin 13 | P92P |
| pin 14 | A4CU |
| pin 15 | 92UA |

Signature Set 3-2.

| Test Point | Signature | |
|---|---|---|
| U10 pin 3 | A6S2 bit 1 | When each bit of A6S1 is set to 0, the signature is 0000; when set to 1, 0003. |
| pin 5 | bit 2 | |
| pin 7 | bit 3 | |
| pin 9 | bit 4 | |
| pin 11 | bit 5 | |
| pin 13 | bit 6 | |
| pin 15 | bit 7 | |
| pin 17 | bit 8 | |

Signature Set 3-3.

| Test Point | Signature | |
|---|---|---|
| U9 pin 3 | A6S1 bit 1 | When each bit of A6S2 is set to 0, the signature is 0000; when set to 1, 0003. |
| pin 5 | bit 2 | |
| pin 7 | bit 3 | |
| pin 9 | bit 4 | |
| pin 11 | bit 5 | |
| pin 13 | bit 6 | |
| pin 15 | bit 7 | |
| pin 17 | bit 8 | |

## Flow Diagram (4)




Figure 8-37. Signature Analysis Troubleshooting Flow Diagram -- sheet 3 of 13.

## Flow Diagram (5)

Flow Diagram (5).

Turn the 4192A off. Set A6S2 as shown below. Turn the 4192A on.

A6S2

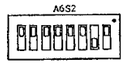

Briefly connect U114 pin 6 to ground.

Signature Analyzer Setting:
START, STOP, CLOCK } U11 pin 15
CLOCK U116 pin 4
WINDOW (+5V): FP6A

Is Signature Set 5-1 correct?
YES
NO
Replace U105

Is Signature Set 5-2 correct?
YES
NO
Replace U62

Signature Analyzer Setting:
START, STOP, CLOCK } U11 pin 15
CLOCK U101 pin 1
WINDOW (+5V): 1658

Is Signature Set 5-3 correct?
YES
NO

Does U62 pin 1 go LOW when T32 is grounded (T34)?
YES
Return to the beginning of Flow Diagram (4).
NO
Replace U109.

Is Signature Set 5-4 correct?
YES
Replace U101
NO

Is Signature Set 5-5 correct?
YES
NO
Check Display Data Bus lines $\overline{CD0}$ - $\overline{CD7}$.

Is Signature Set 5-6 correct?
YES
NO
Check Display Data Bus lines $\overline{CA0}$ - $\overline{CA7}$.

Is Signature Set 5-7 correct?
YES
NO
Replace U3 on the 16343A.

Replace U1 and U2 on the 16343A

Signature Set 5-1.

| Test Point | Signature |
|---|---|
| U105 pin 11 | FU63 |
| pin 13 | P5F9 |

Signature Set 5-2.

| Test Point | Signature |
|---|---|
| U62 pin 3 | 00U8 |
| pin 6 | A101 |
| pin 10 | 6U6C |

Signature Set 5-3.

| Test Point | Signature |
|---|---|
| U101 pin 3 | FACU |
| pin 5 | 579U |
| pin 7 | HF49 |
| pin 9 | 9H6P |
| pin 11 | ACA0 |
| pin 13 | 7426 |
| pin 15 | U1HF |
| pin 17 | 2AH5 |

Signature Set 5-4.

| Test Point | Signature |
|---|---|
| U101 pin 2 | FACU |
| pin 4 | 579U |
| pin 6 | HP49 |
| pin 8 | 9H6P |
| pin 12 | ACA0 |
| pin 14 | 7426 |
| pin 16 | U1HF |
| pin 18 | 2AH5 |

Signature Set 5-5.

| Test Point | Signature |
|---|---|
| U93 pin 5 | 54F3 |
| pin 7 | 677H |
| pin 9 | 7951 |
| pin 11 | 18CA |
| U94 pin 5 | 0CC1 |
| pin 7 | C159 |
| pin 9 | F8A2 |
| pin 11 | 4FUC |

Signature Set 5-6.

| Test Point | Signature |
|---|---|
| U90 pin 5 | ZHH8 |
| pin 7 | F96U |
| pin 9 | 5PH9 |
| pin 11 | P0H4 |
| U91 pin 5 | F511 |
| pin 7 | 3PHP |
| pin 9 | FFH3 |
| pin 11 | H58A |

Signature Set 5-7.

| Test Point | Signature |
|---|---|
| on the 16343A | |
| U3 pin 13 | AH6F |
| pin 14 | P8UA |

## Flow Diagram (6)

Flow Diagram (6).

Perform Flow (2).

Perform Flow (4).

Remove the connection between U107 pin 5 and T33.

Return to START of the Diagnostic Test Flow Diagram and proceed until P-04 is displayed (regardless of whether P-01, P-02, or P-03 is displayed or not)

END

Figure 8-37. Signature Analysis Troubleshooting Flow Diagram – sheet 4 of 13.

## Flow Diagram (7)

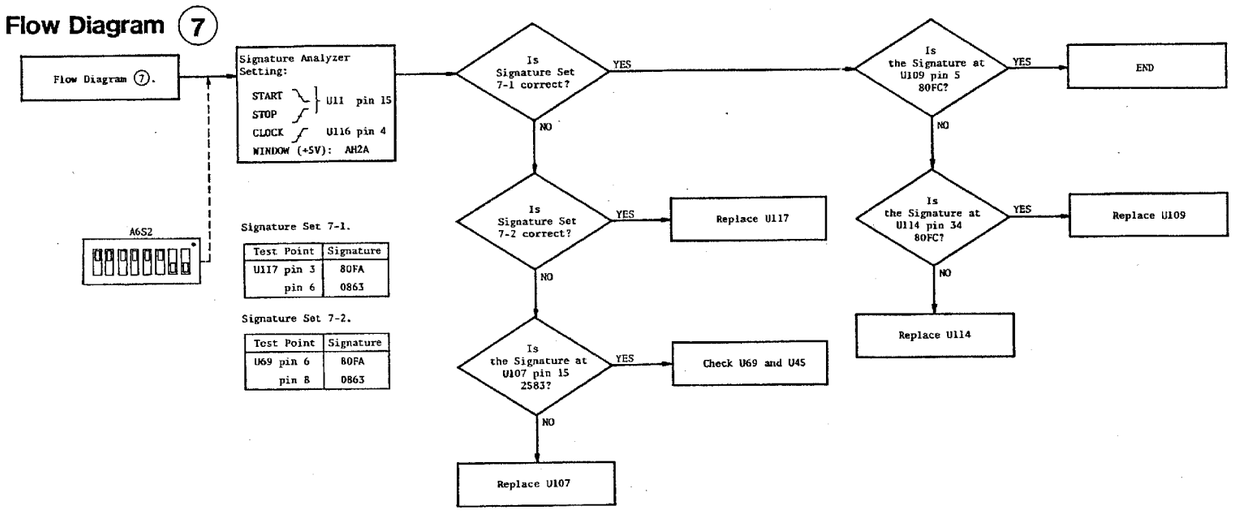


## Flow Diagram (8)

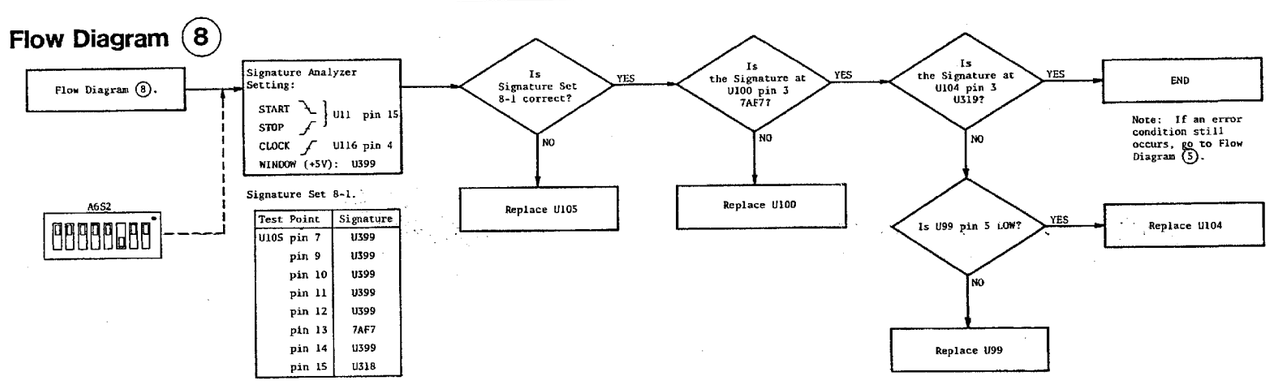


Figure 8-37. Signature Analysis Troubleshooting Flow Diagram — sheet 5 of 13.

## Flow Diagram (9)

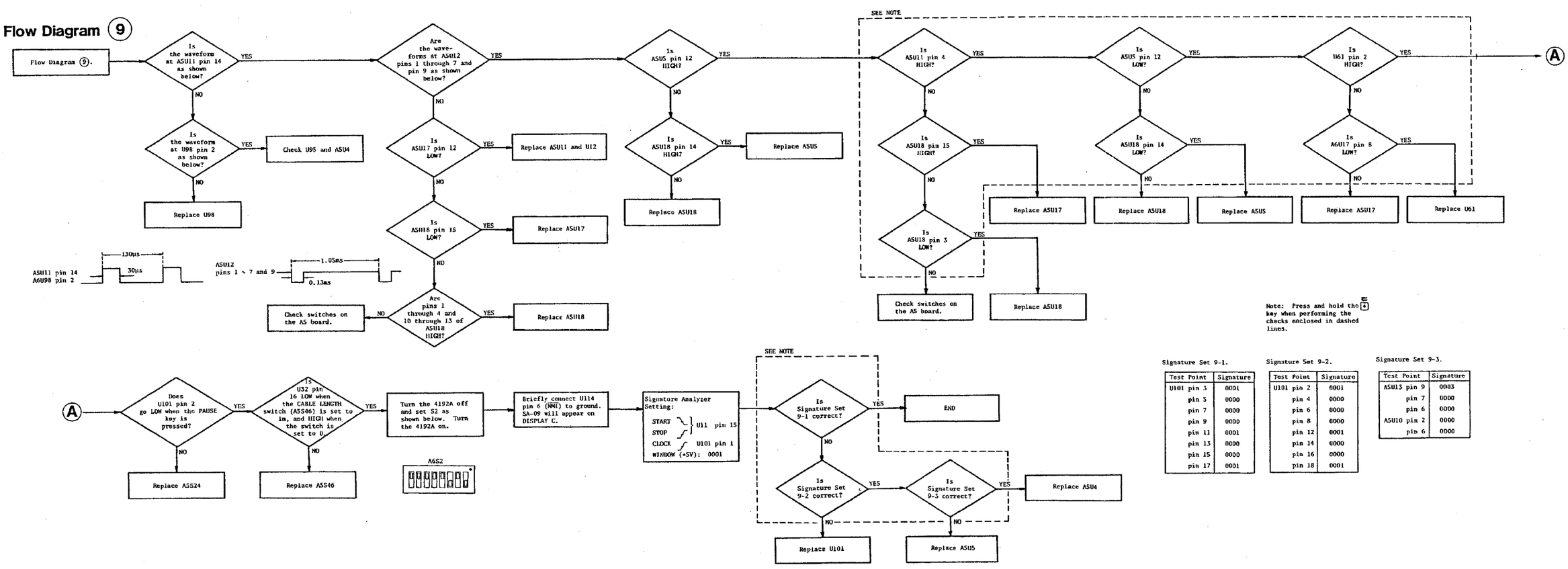


Signature Set 9-1.

| Test Point | Signature |
|---|---|
| U101 pin 3 | 0001 |
| pin 5 | 0000 |
| pin 7 | 0000 |
| pin 9 | 0000 |
| pin 11 | 0001 |
| pin 13 | 0000 |
| pin 15 | 0000 |
| pin 17 | 0001 |

Signature Set 9-2.

| Test Point | Signature |
|---|---|
| U101 pin 2 | 0001 |
| pin 4 | 0000 |
| pin 6 | 0000 |
| pin 8 | 0000 |
| pin 12 | 0001 |
| pin 14 | 0000 |
| pin 16 | 0000 |
| pin 18 | 0001 |

Signature Set 9-3.

| Test Point | Signature |
|---|---|
| A5U13 pin 9 | 0003 |
| pin 7 | 0000 |
| pin 6 | 0000 |
| A5U10 pin 2 | 0000 |
| pin 6 | 0000 |

Figure 8-37. Signature Analysis Troubleshooting Flow Diagram -- sheet 6 of 13.

## Flow Diagram (10)

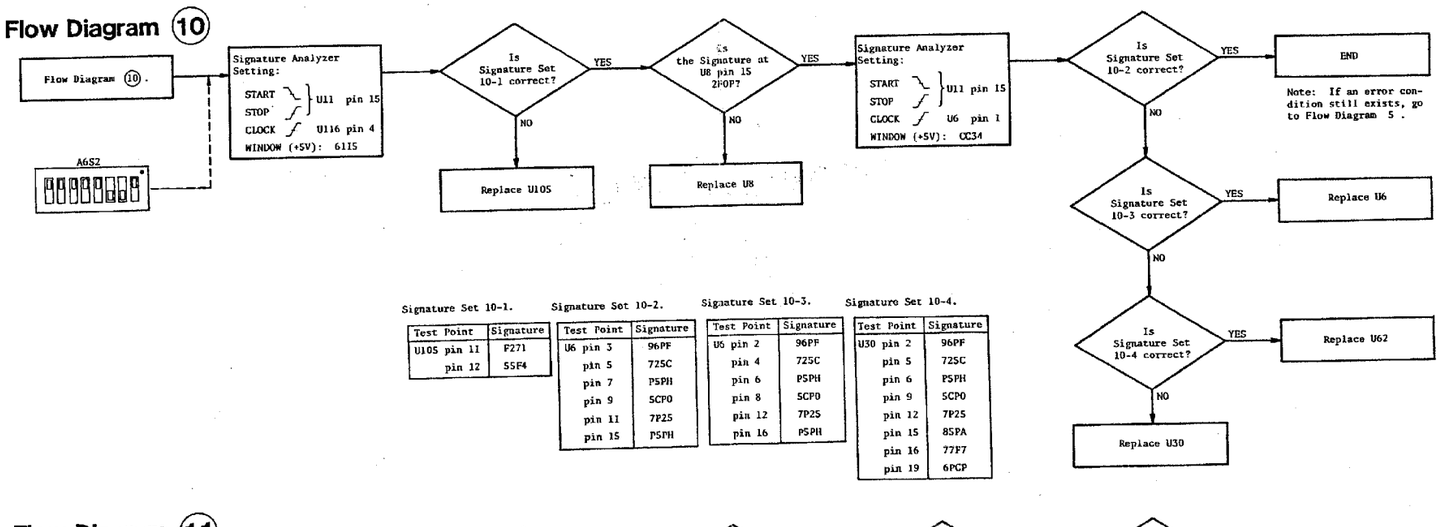


Signature Set 10-1.

| Test Point | Signature |
|---|---|
| U10S pin 11 | P271 |
| pin 12 | 55F4 |

Signature Set 10-2.

| Test Point | Signature |
|---|---|
| U6 pin 3 | 96PF |
| pin 5 | 725C |
| pin 7 | P5PH |
| pin 9 | 5CP0 |
| pin 11 | 7P25 |
| pin 15 | P5PH |

Signature Set 10-3.

| Test Point | Signature |
|---|---|
| U5 pin 2 | 96PF |
| pin 4 | 725C |
| pin 6 | P5PH |
| pin 8 | 5CP0 |
| pin 12 | 7P25 |
| pin 16 | P5PH |

Signature Set 10-4.

| Test Point | Signature |
|---|---|
| U30 pin 2 | 96PF |
| pin 5 | 725C |
| pin 6 | P5PH |
| pin 9 | 5CP0 |
| pin 12 | 7P25 |
| pin 15 | 8SPA |
| pin 16 | 77F7 |
| pin 19 | 6PCP |

## Flow Diagram (11)

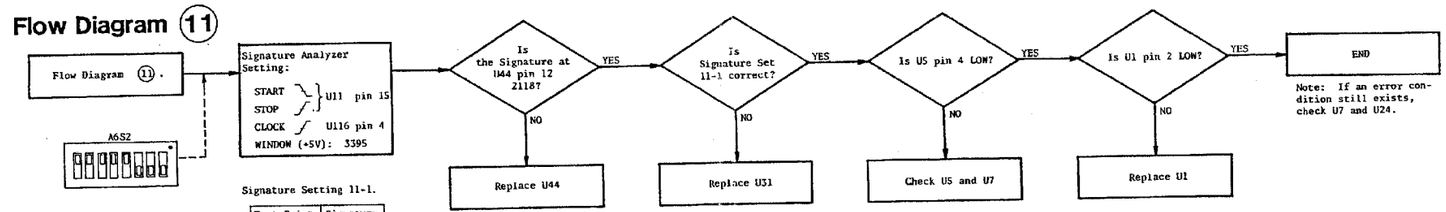


Signature Setting 11-1.

| Test Point | Signature |
|---|---|
| U31 pin 2 | FP18 |
| pin 5 | U1UC |
| pin 6 | FP18 |
| pin 9 | 0000 |
| pin 12 | FP18 |
| pin 15 | U1UC |
| pin 16 | FP18 |
| pin 19 | U1UC |

Figure 8-37. Signature Analysis Troubleshooting Flow Diagram — sheet 7 of 13.

## Flow Diagram (12)

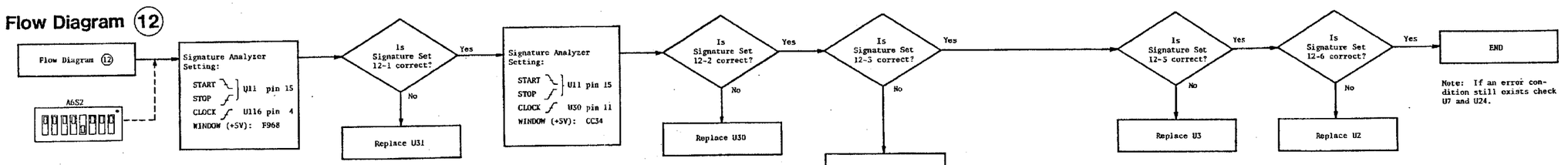


Signature Set 12-1.

| Test Point | Signature |
|---|---|
| U31 pin 2 | 0000 |
| pin 5 | 0532 |
| pin 6 | 0A5H |
| pin 9 | F968 |
| pin 12 | 0A5H |
| pin 15 | 0U6U |
| pin 16 | U20H |
| pin 19 | 3138 |

Signature Set 12-2.

| Test Point | Signature |
|---|---|
| U30 pin 2 | 4C76 |
| pin 5 | 392H |
| pin 6 | U2U6 |
| pin 9 | 2HU0 |
| pin 12 | 3U12 |
| pin 15 | 245C |
| pin 16 | CCP3 |
| pin 19 | C75U |

Signature Set 12-3.

| Test Point | Signature |
|---|---|
| U3 pin 3 | 4C76 |
| pin 5 | 392H |
| pin 11 | U2U6 |
| pin 13 | 2HU0 |
| U2 pin 3 | 3U12 |
| pin 5 | 245C |
| pin 11 | CC34 |
| pin 13 | C75U |

Signature Set 12-4.

| Test Point | Signature |
|---|---|
| on the 16343A | |
| U8 pin 7 | F335 |
| pin 9 | U73U |
| pin 10 | U20H |
| pin 11 | F968 |
| pin 12 | F968 |
| pin 13 | 0U6U |
| pin 14 | F968 |
| pin 15 | F968 |

Signature Set 12-5.

| Test Point | Signature |
|---|---|
| U3 pin 2 | 4C76 |
| pin 6 | 392H |
| pin 10 | U2U6 |
| pin 14 | 2HU0 |

Signature Set 12-6.

| Test Point | Signature |
|---|---|
| U2 pin 2 | 3U12 |
| pin 6 | 245C |
| pin 10 | CC34 |
| pin 14 | C75U |

## Flow Diagram (13)

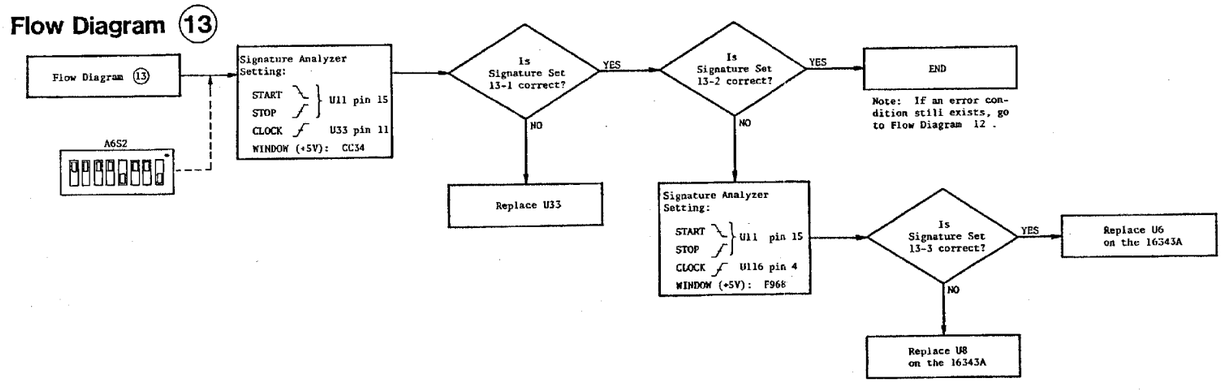


Signature Set 13-1.

| Test Point | Signature |
|---|---|
| U33 pin 2 | C75U |
| pin 5 | CCP3 |
| pin 6 | 245C |
| pin 9 | 3U12 |
| pin 12 | 2HU0 |
| pin 15 | U2U6 |
| pin 16 | 392H |
| pin 19 | 4C76 |

Signature Set 13-2.

| Test Point | Signature |
|---|---|
| U3 pin 3 | CC34 |
| pin 5 | 392H |
| pin 11 | CC34 |
| pin 13 | 0000 |
| U2 pin 3 | 3U12 |
| pin 5 | 245C |
| pin 11 | CCP3 |
| pin 13 | C7SU |

Signature Set 13-3.

| Test Point | Signature |
|---|---|
| on the 16343A | |
| U8 pin 7 | F335 |
| pin 9 | U73U |
| pin 10 | U20H |
| pin 11 | 0U6U |
| pin 12 | F968 |
| pin 13 | F968 |
| pin 14 | F968 |
| pin 15 | F968 |

Figure 8-37. Signature Analysis Troubleshooting Flow Diagram — sheet 8 of 13.

## Flow Diagram (14)

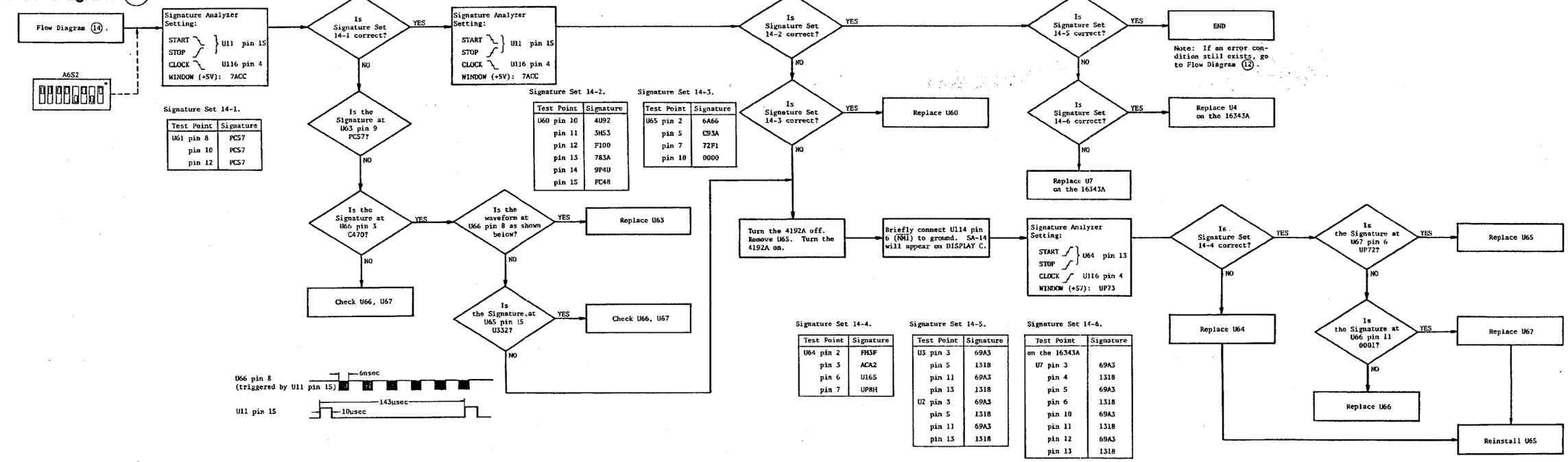


## Flow Diagram (15)

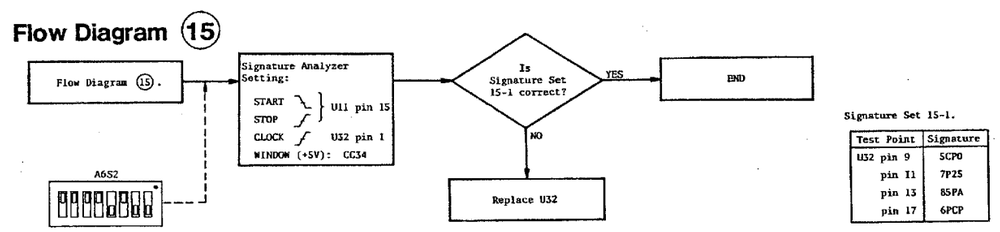


Figure 8-37. Signature Analysis Troubleshooting Flow Diagram — sheet 9 of 13.

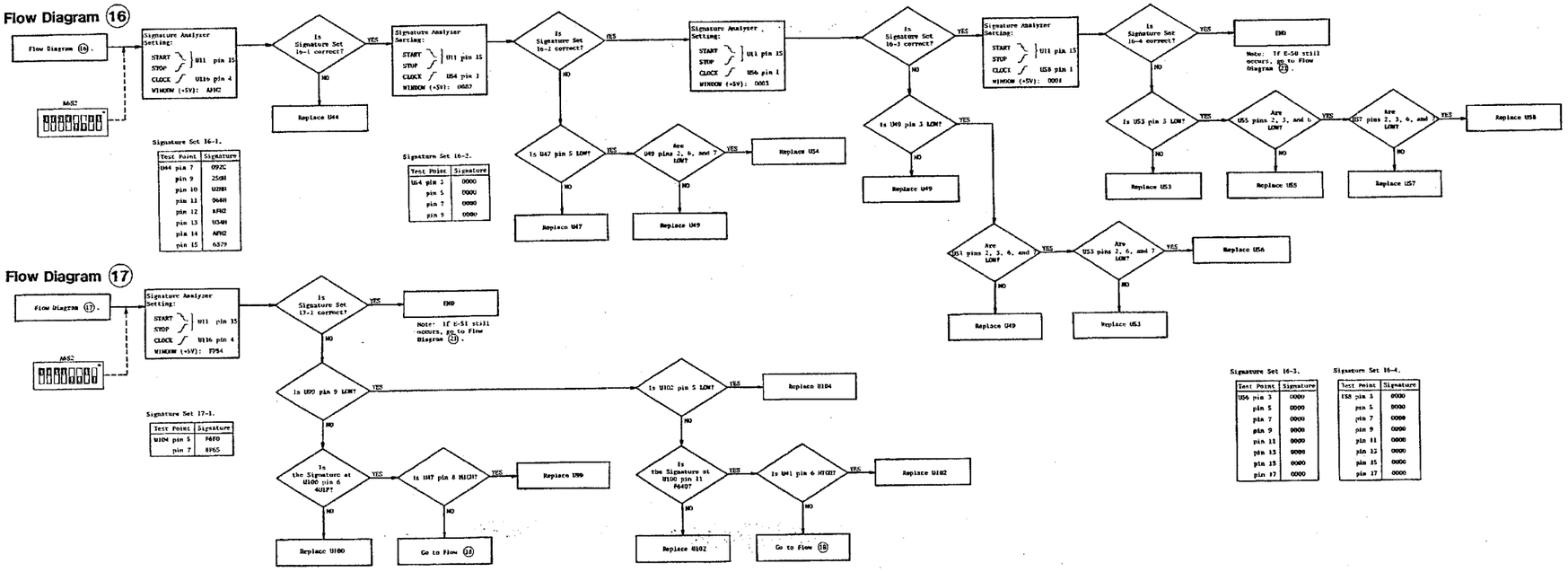


Figure 8-37. Signature Analysis Troubleshooting Flow Diagram — sheet 10 of 13.

## Flow Diagram (18)

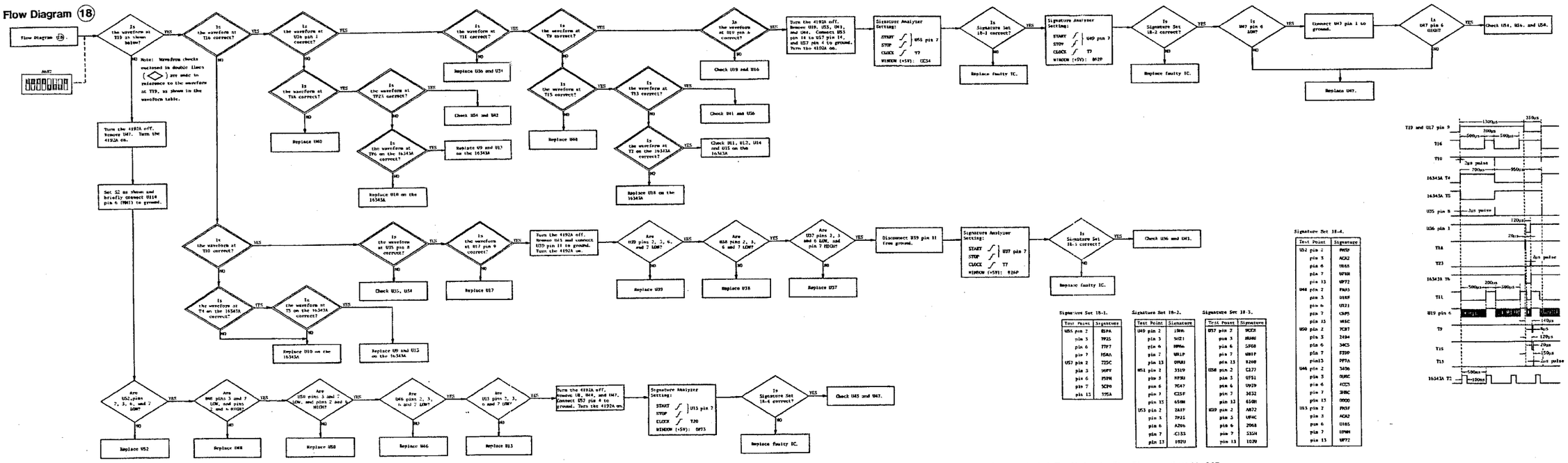


Signature Set 18-1.

| Test Point | Signature |
|---|---|
| U55 pin 2 | HUPA |
| pin 3 | 7P25 |
| pin 6 | 77F7 |
| pin 7 | H5RA |
| U57 pin 2 | 735C |
| pin 3 | 96PF |
| pin 6 | P5P6 |
| pin 7 | 5CP0 |
| pin 13 | 595A |

Signature Set 18-2.

| Test Point | Signature |
|---|---|
| U49 pin 2 | 19H6 |
| pin 3 | 5HC1 |
| pin 6 | HP66 |
| pin 7 | U81P |
| pin 13 | OPU8J |
| U51 pin 2 | 3319 |
| pin 3 | HP3U |
| pin 6 | 7C47 |
| pin 7 | C25F |
| pin 13 | 650H |
| U53 pin 2 | 2A1Y |
| pin 3 | 7P25 |
| pin 6 | A2U6 |
| pin 7 | C1S5 |
| pin 13 | 102U |

Signature Set 18-3.

| Test Point | Signature |
|---|---|
| U37 pin 2 | 9CCX |
| pin 3 | H6H8 |
| pin 6 | 5F08 |
| pin 7 | U81P |
| pin 13 | H260 |
| U38 pin 2 | C177 |
| pin 3 | 0F51 |
| pin 6 | U929 |
| pin 7 | 3452 |
| pin 13 | 65U8 |
| U39 pin 2 | A872 |
| pin 3 | UP4C |
| pin 6 | 2068 |
| pin 7 | 53SH |
| pin 13 | 1020 |

Signature Set 18-4.

| Test Point | Signature |
|---|---|
| U52 pin 2 | P6TP |
| pin 3 | ACA2 |
| pin 6 | UH6R |
| pin 7 | UP3H |
| pin 13 | UP72 |
| U48 pin 2 | FA03 |
| pin 3 | U48F |
| pin 6 | U321 |
| pin 7 | C8P5 |
| pin 13 | 4E6C |
| U50 pin 2 | 7C87 |
| pin 3 | 2494 |
| pin 6 | 34C5 |
| pin 7 | F39P |
| pin13 | PP7A |
| U46 pin 2 | 3A06 |
| pin 3 | 0U8C |
| pin 6 | 4C25 |
| pin 7 | 3H8C |
| pin 13 | 0000 |
| U13 pin 2 | P65F |
| pin 3 | ACA2 |
| pin 6 | U1H5 |
| pin 7 | 1P4H |
| pin 13 | UP72 |

Figure 8-37. Signature Analysis Troubleshooting Flow Diagram — sheet 11 of 13.

## Flow Diagram (19)

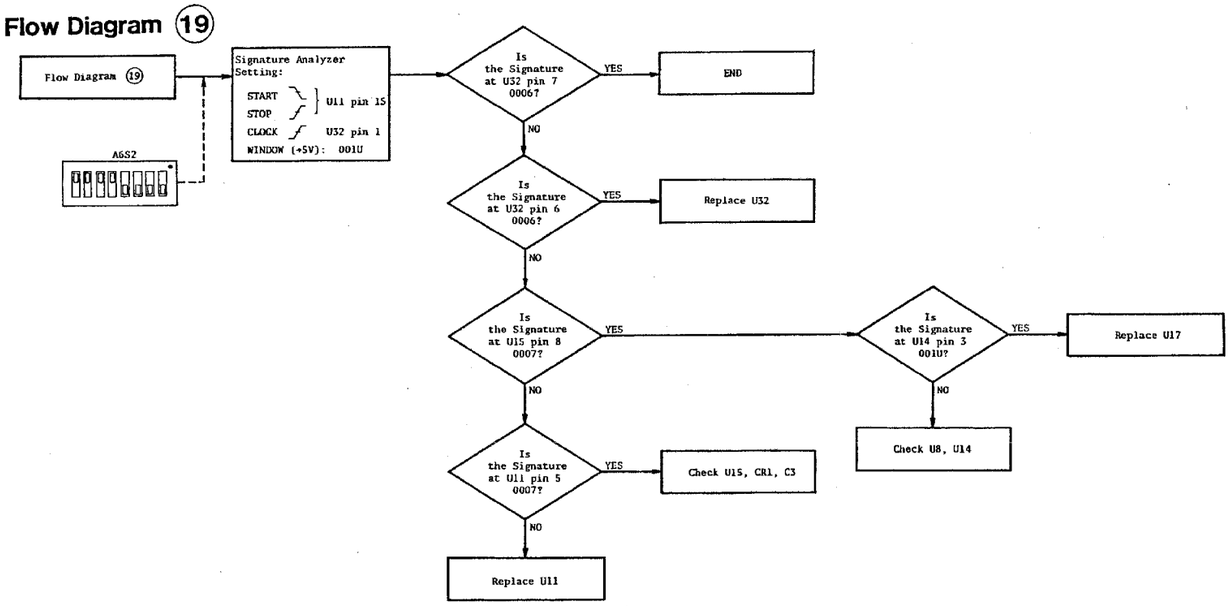


## Flow Diagram (20)

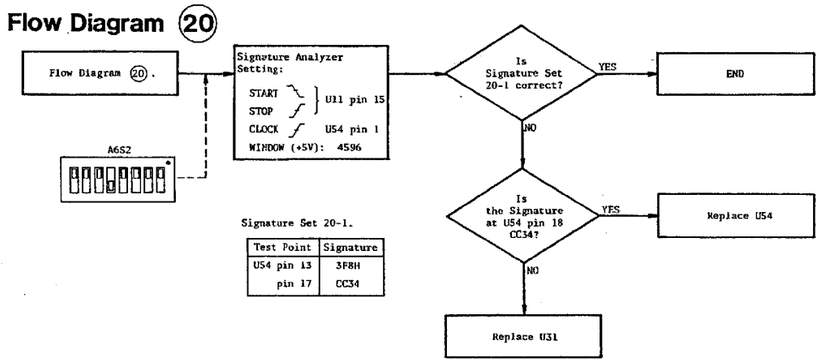


Signature Set 20-1.

| Test Point | Signature |
|---|---|
| U54 pin 13 | 3F8H |
| pin 17 | CC34 |

Figure 8-37. Signature Analysis Troubleshooting Flow Diagram — sheet 12 of 13.

## Flow Diagram (21)

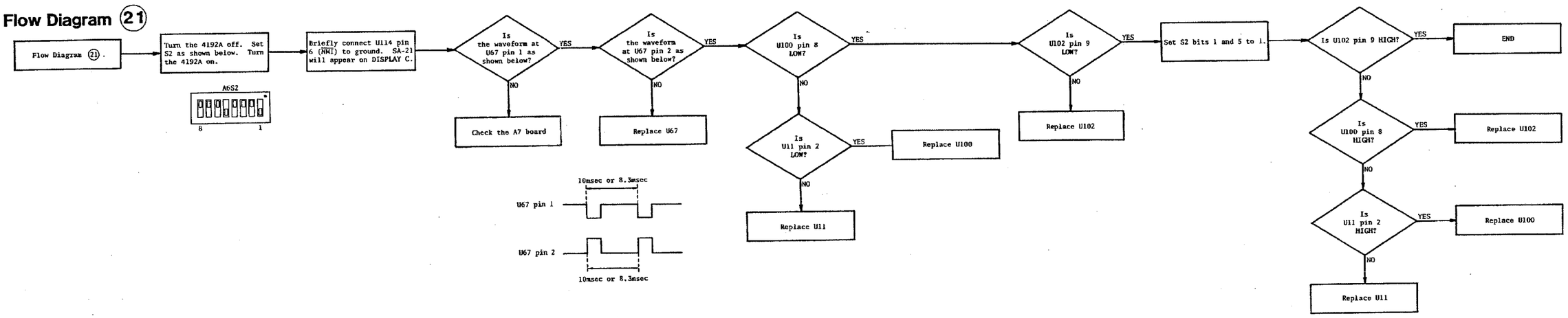


Figure 8-37. Signature Analysis Troubleshooting Flow Diagram — sheet 13 of 13.

8-115. REPAIR

WARNING

BEFORE PROCEEDING WITH REPAIR, BE SURE THAT THE INSTRUMENT IS DISCONNECTED FROM THE POWER LINE.

8-116. A6 MICROPROCESSOR DIGITAL CONTROL BOARD DISASSEMBLY

8-117. To troubleshoot or replace a component on the A6 Microprocessor Digital Control board, perform the following procedure :

1. Remove the two feet located at the left and right rear corners of the top cover.

2. Fully loosen the top cover retaining screw located at the rear of the instrument and lift off the top cover.

3. Remove the six screws securing the upper mounting plate, which are located along the left and right side frames (3 each).

4. Pull-up the two plastic fasteners located at the corners (front side) of the upper mounting plate.

5. Raise the mounting plate from the front as you would the hood of an automobile and open until it is latched at the position shown in Figure 8-38.

6. The A6 board is mounted on the underside of the mounting plate and is visible from the front in this position.

7. If it is necessary to remove the A6 board, disconnect all the cables from the board and remove the fourteen screws securing the board.

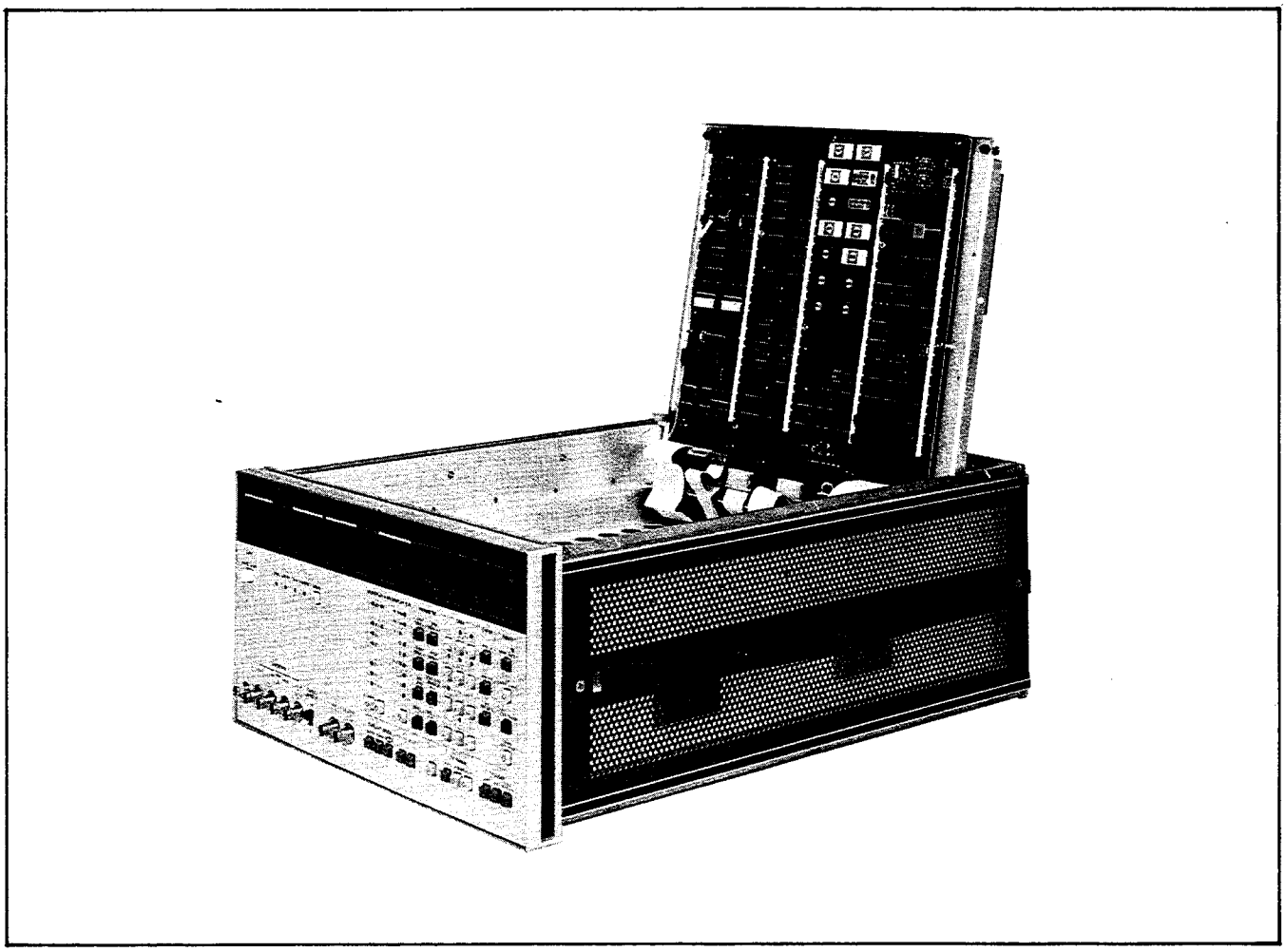

Figure 8-38. A6 Microprocessor Digital Control Board Disassembly.

8-118. A2, A3, A4 AND A9 BOARDS DISASSEMBLY

8-119. To troubleshoot or replace a component on the A2, A3, A4 or A9 board, perform the following procedure:

1. Remove the top cover and fully open the upper mounting plate as described in steps 1 through 5 of the procedure for A6 Microprocessor Digital Control Board Disassembly (Paragraph 8-117).

2. Remove the three screws securing the shield plate. An illustration of the board assembly locations is printed on the shield plate.

3. Take off the flat cable assembly between the A6 board and the A5 Display and Keyboard Control board assembly from the cable clips (2) on the shield plate.

4. Lift the shield plate up and out. The A2, A3, A4 and A9 boards are visible on the top-side of the lower mounting plate when the shield plate is removed. If it is necessary to remove one of the boards, disconnect all the cables from the board and remove the screws securing the board.

8-120. A1, A11 and A12 BOARDS DISASSEMBLY

8-121. The A1, A11 and A12 board assemblies are located on the underside of the lower mounting plate.

To troubleshoot or replace a component on the A1, A11 or A12 board, perform the following procedure:

1. Stand the instrument on the left or right side.

2. Remove the two feet located at the left and right rear corners of the bottom cover.

3. Fully loosen the bottom cover retaining screw located at the rear of the instrument and take off the bottom cover. The A1, A11 and A12 boards are visible when the bottom cover is removed. If it is necessary to remove one of the boards, disconnect all the cables from the board and remove the screws securing the board.

8-122. A5 DISPLAY AND KEYBOARD CONTROL BOARD DISASSEMBLY

8-123. To troubleshoot or replace a component on the A5 Display and Keyboard Control board or on the front panel assembly, perform the following procedure.

1. Carefully remove the top trim strip from the front frame (use a screwdriver to lift out the trim).

2. Remove the three screws from the top side of the front frame.

3. Stand the instrument on the left or right side.

4. Remove the three screws from the bottom side of the front frame.

5. Remove the four feet located at the corners of the rear frame.

6. Fully loosen the bottom cover retaining screw located at the rear of the instrument and remove the bottom cover.

7. Disconnect the SMB connectors from the $H_{POT}$ cable and the $L_{POT}$ cable from A1J6 and A1J12, respectively.

8. Return the instrument to the normal position as it is (without re-installing the bottom cover).

9. Remove the top cover.

10. Remove the six screws securing the upper mounting plate, which are located along the left and right side frames (3 each).

11. Pull-up the two plastic fasteners located at the corners (front side) of the upper mounting plate.

12. Raise the mounting plate from the front and open the mounting plate. The A6 Microprocessor Digital Control Board is visible on the underside of the mounting plate.

13. Disconnect the flat cable (1) between the A6 and A5 boards from A6J7. See Figure 8-39.

14. Take off the flat cable from the two cable clips on the shield plate.

15. Carefully push the back of the A5 board forward; the front panel assembly will come out.

16. Unsolder the black short lead from the GUARD terminal lug.

17. Lay down the front panel assembly as shown in Figure 8-39.

18. Remove the six screws ((2) ~ (7)) securing the shield plate to the A5 board (the cable clamp screw need not be removed).

19. Remove the seven screws ( (8) ~ (14) ) securing the A5 board to the front panel assembly.

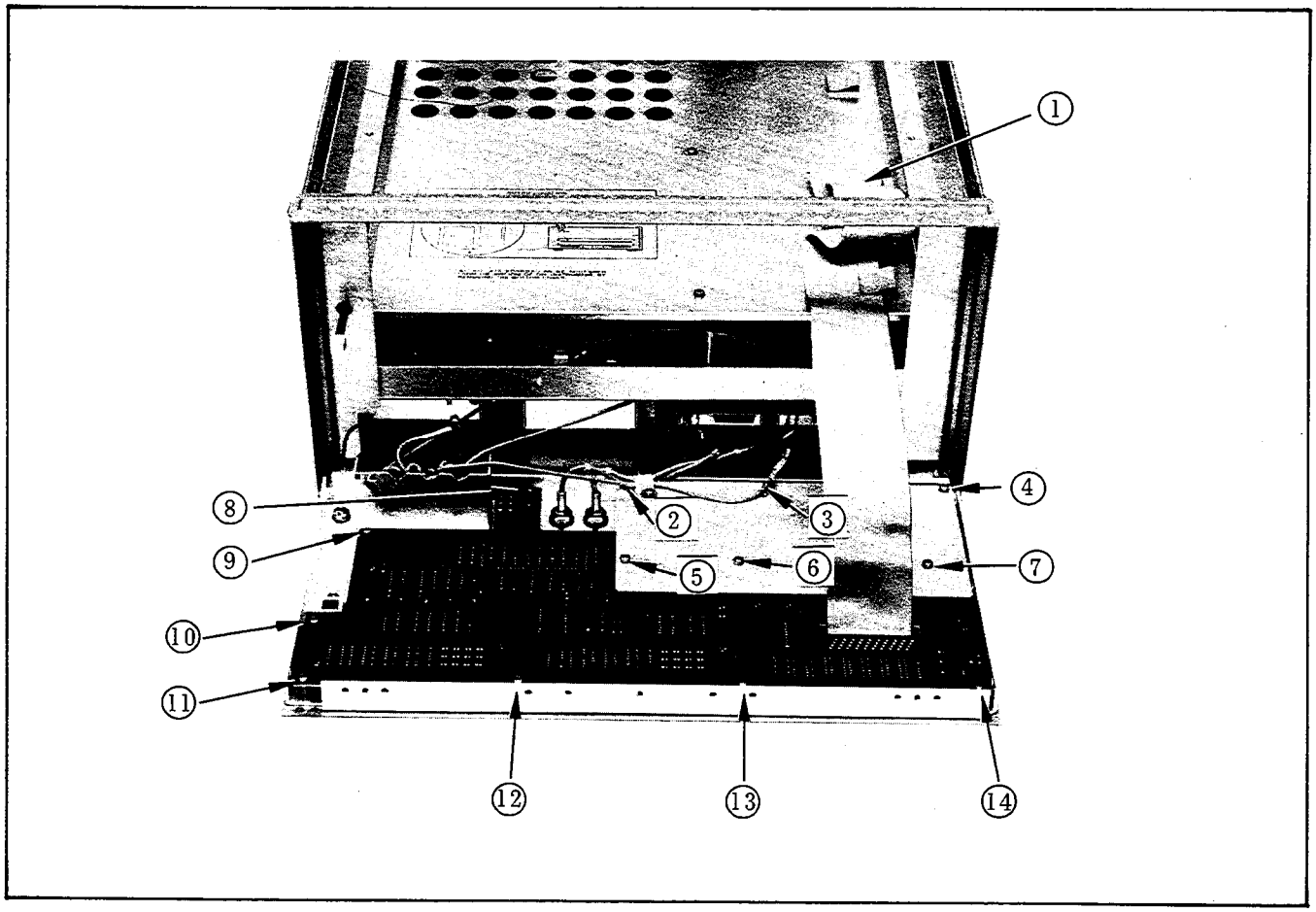


Figure 8-39. A5 Display and Keyboard Control Board Disassembly.

8-124. PRODUCT SAFETY CHECKS

WARNING

WHENEVER IT APPEARS LIKELY THAT SAFETY PROTECTIVE PROVISIONS HAVE BEEN IMPAIRED, THE APPARATUS SHALL BE MADE INOPERATIVE AND BE SECURED AGAINST ANY UNINTENDED OPERATION. THE PROTECTION IS LIKELY TO BE COMPROMISED IF, FOR EXAMPLE:

-- THE APPARATUS SHOWS VISIBLE DAMAGE.

-- THE INSTRUMENT FAILS TO PERFORM THE INTENDED MEASUREMENT.

-- THE UNIT HAS UNDERGONE PROLONGED STORAGE UNDER UNFAVORABLE CONDITIONS.

-- THE INSTRUMENT HAS SUFFERED SEVERE TRANSPORT STRESS.

8-125. The following five checks are recommended to verify the product safety of the 4192A instrument (these checks may also be done to check for product safety after troubleshooting and repair). When such checks are needed, perform the following:

1. Visually inspect interior of instrument for any signs of abnormal internally generated heat, such as discolored printed circuit boards or components, damaged insulation, or evidence of arcing. Determine and remedy cause of any such condition.

2. Using a suitable ohmmeter, check resistance from instrument enclosure to ground pin on power cord plug. The reading must be less than 0.5 ohms. Flex the power cord while making this measurement to determine whether intermittent discontinuities exist.

3. Check GUARD terminal on front panel using procedure (2).

4. Disconnect instrument from power source. Turn power switch to on. Check resistance from instrument enclosure to line and neutral (tied together). The minimum acceptable resistance is two megohms. Replace any component which fails or causes a failure.

5. Check line fuse to verify that a correctly rated fuse is installed.

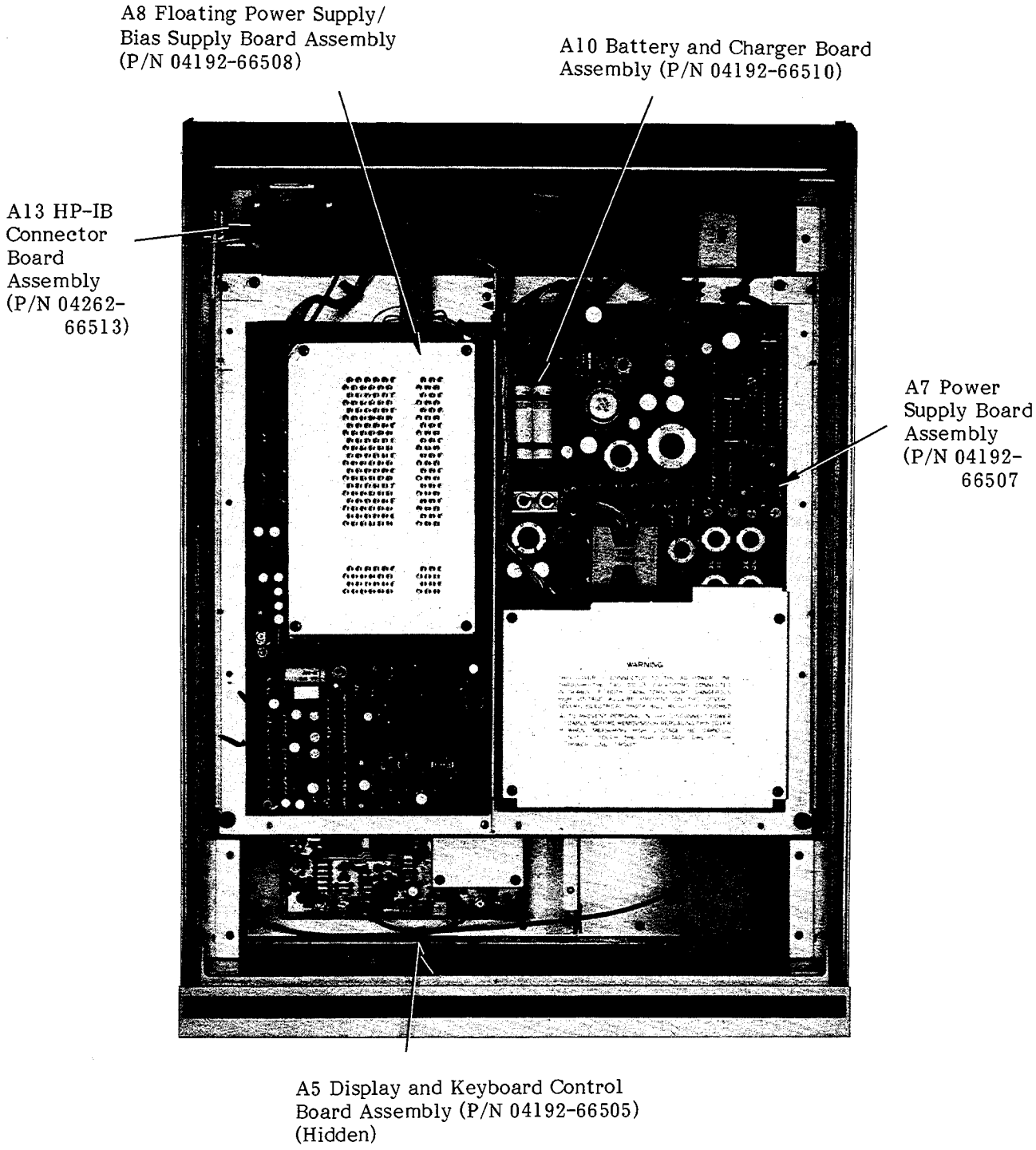


(Top View)

Figure 8-40. Assembly Locations (Sheet 1 of 4).

A6 Microprocessor Digital Control
Board Assembly (P/N 04192-66506)

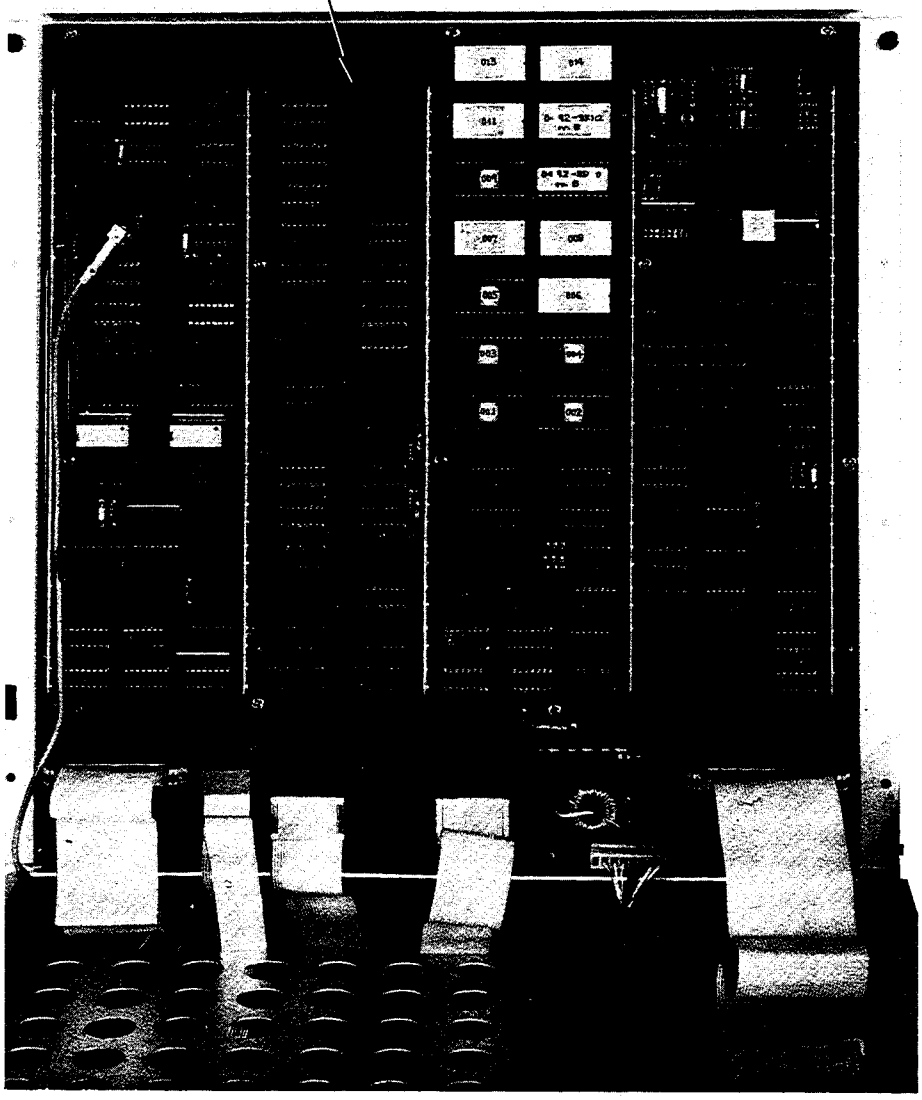

Figure 8-40. Assembly Locations (Sheet 2 of 4).

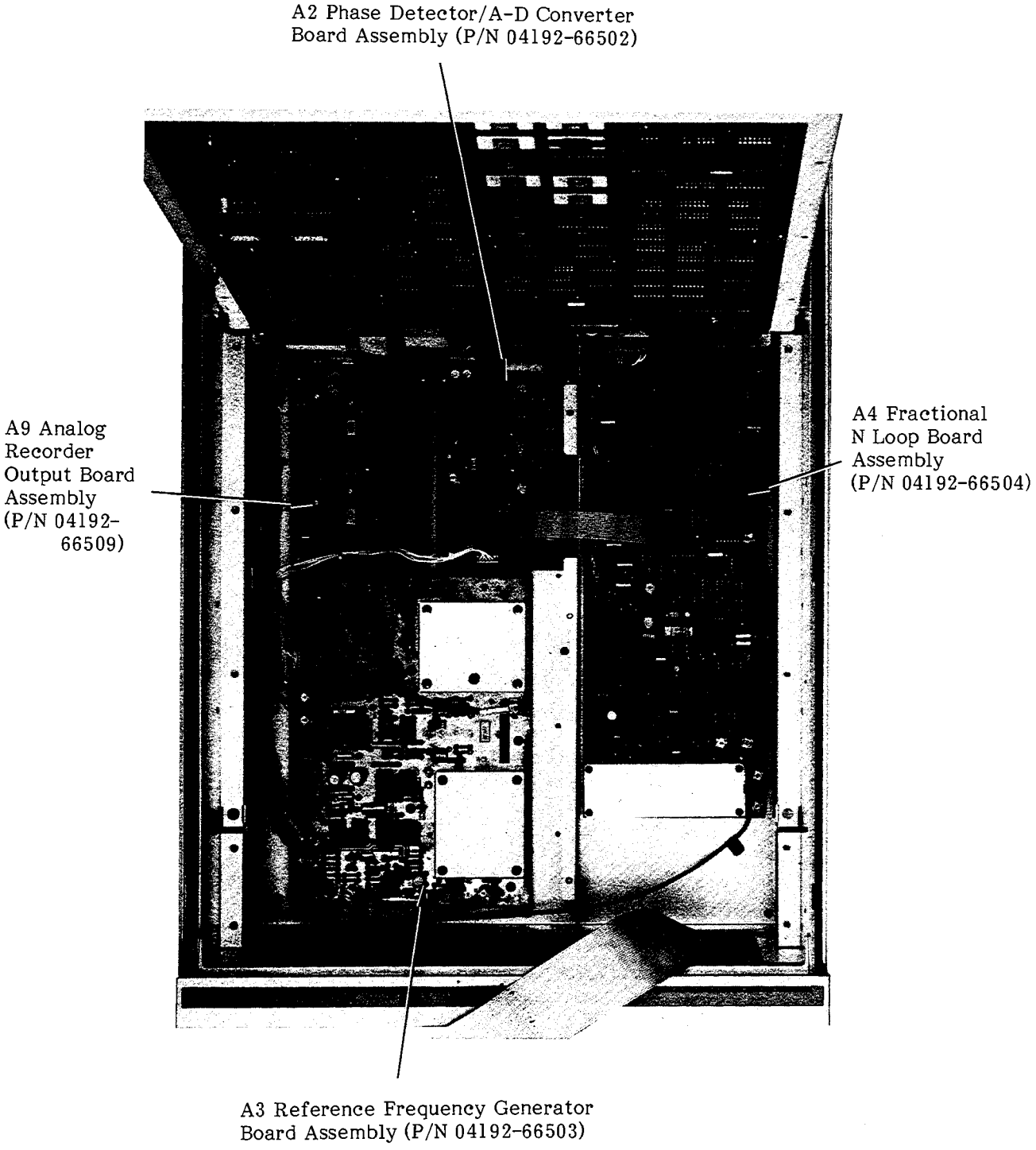


Figure 8-40. Assembly Locations (Sheet 3 of 4).

A12 Modulator Board Assembly
(P/N 04192-66512)

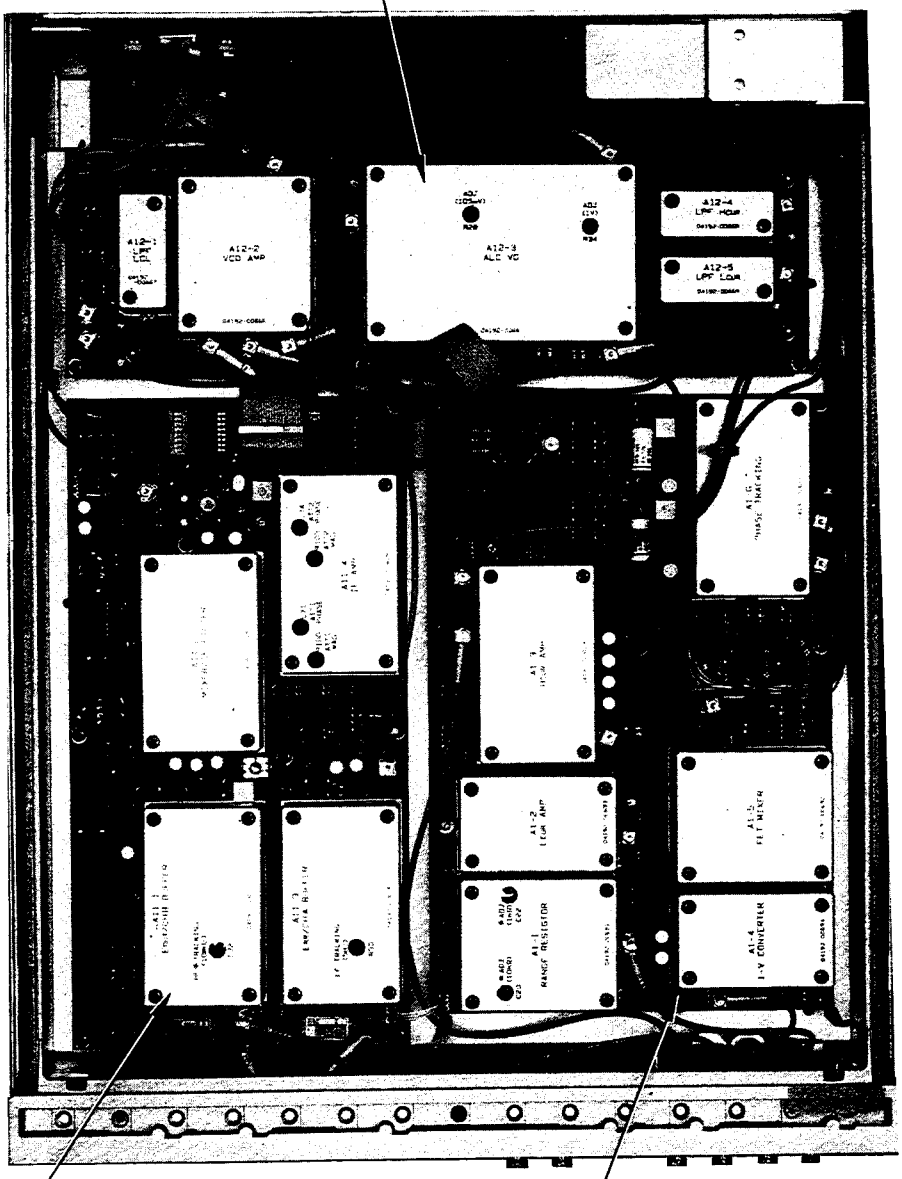

A11 Process Amplifier Board
Assembly (P/N 04192-66511)

A1 Range Resistor/Null Detector
Board Assembly (P/N 04192-66501)

(Bottom View)

Figure 8-40. Assembly Locations (Sheet 4 of 4).

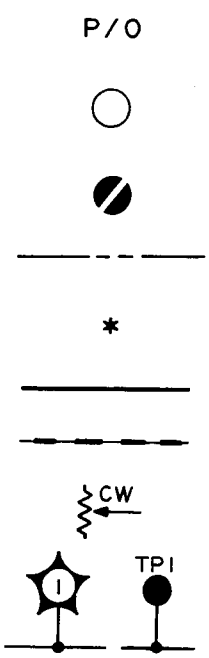


Part of.

Knob control.

Screwdriver adjustment.

Circuit assembly boarderline.

Asterisk denotes a factory selected value. Value shown is typical part may be omitted.

Heavy line indicates main signal path.

Heavy dashed line indicates main feedback path.

Wiper moves towards CW with clockwise rotation of control (as viewed from shaft or knob).

Numbered test point. Measurement aid provided.

Denotes wire color code. Code used is the same as the resistor color code (e.g., 9.4.7 denotes white/yellow/violet).

Indicates direct conducting connection to earth.

Indicates conducting connection to chassis or frame.

Indicates circuit common connection.

Encloses front panel designations.

Encloses rear panel designations.

Figure 8-41. Schematic Diagram Notes.

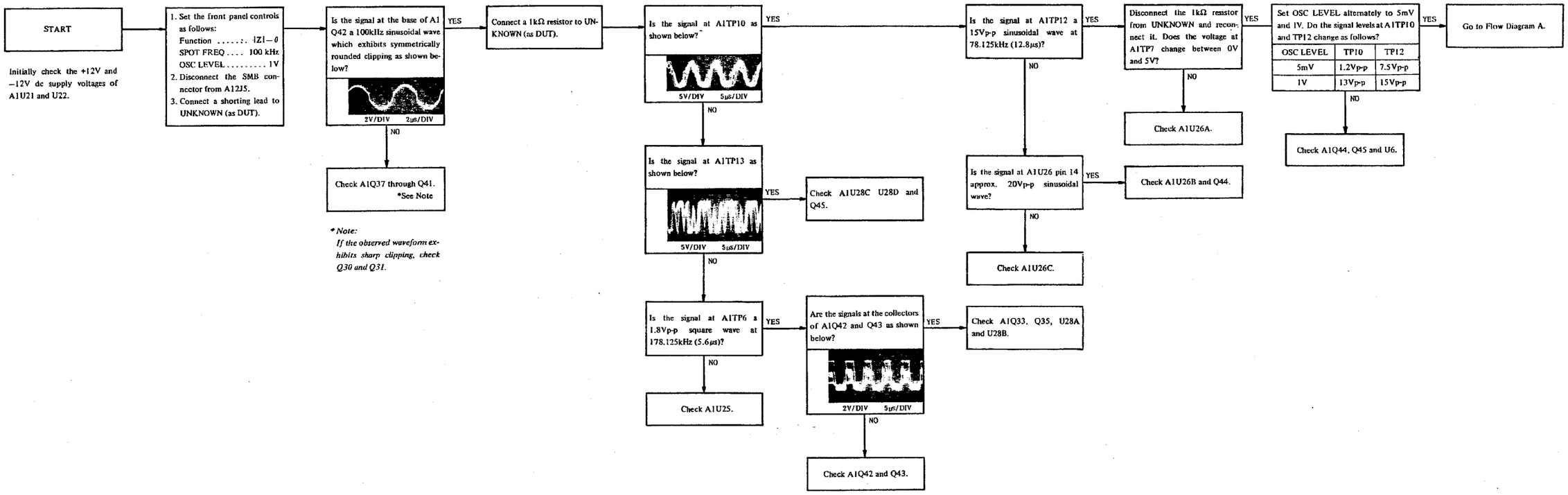


Figure 8-42. A1 Range Resistor/Null Detector Board Troubleshooting Flow Diagram – 1 of 3.

8-126. A1 RANGE RESISTOR/NULL DETECTOR

8-127. Null Detector (1): I-V Converter and IF Amplifier

8-128. The unbalance current yielded from the difference between the DUT and range resistor currents flows to the input of the I-V converter (Q30, Q31 and Q37 through Q41) at the first stage of the Null Detector. To maintain the advantages of a floating bridge circuit, circuit common of the I-V converter amplifier is also isolated from the other circuits. In parallel with the basic feedback loop (R145) for the current to voltage converter function, the secondary loop, consisting of R132, C112, and the class C bias push-pull amplifier stage (Q30 and Q31), applies a non-linear feedback to suppress the output for excessive inputs. Normally, both Q30 and Q31 are off with no base bias. Over almost the entire voltage range of the amplifier output, the secondary feedback loop is open, so the I-V converter amplifier has a linear gain characteristic. When a transient unbalance input approaches the saturation level of the amplifier, Q30 and Q31 turn on in the peak region of the output before saturation occurs. As the secondary feedback loop decreases the gain of the I-V converter, further increase in the output voltage is suppressed. It moderates the saturation of the amplifier and, consequently, prevents a phase shift at the output (an effect of saturation). Such a phase shift prolongs the time required to balance the bridge circuit.

At the outputs of the Q42 and Q43 differential amplifier, the unbalance vector signal from the I-V converter is converted into a set of complementary signals, which are 180° out of phase with each other and referenced to ground. The floating circuit section is isolated at the input stage from the other circuits following this amplifier. To facilitate phase detection of the unbalance signal (to establish the control signals for the A12 Modulator circuit), the Q33 and Q35 Mixer heterodynes the unbalance vector signal to the 78.125kHz or 69.444kHz IF vector signal. The mixer generates the sum and difference frequencies between the unbalance vector signal and the (5Hz ~ 13MHz) +IF local signal from the U25 mixer driver. Because of the effect of the dc offset circuit (dc feedback) combined with the U28 amplifier, the mixer generates less switching spike noise; thus, eliminating local frequency components from the output. The higher order sidebands, above approximately 70kHz, are rejected by the low-pass filter between the first and the second IF Amplifier stages (U28C + U28D and U26D + U26C). Depending on the selected measurement range, the Q45 and Q44 gain attenuator switches of the IF Amplifiers are controlled to maintain the gain of the balance control loop almost constant. This results in quick and accurate balancing operation on all ranges. The diode limitters combined with these attenuators prevent excessive inputs from saturating the IF Amplifiers.

When the bridge is not balanced, the detected unbalance current yields an abnormally large IF signal. An IF signal greater than 7Vp-p at the output of the U26D exceeds the threshold level of the U26A Unbalane Detector, and, therefore, the $\overline{\text{TRDSAT}}$ line goes LOW to signal the unbalance state of the bridge circuit.

Table 8-5. Null Detector Gain Control

| Measurement Range | | Range Resistor | Attenuator Setting | |
|---|---|---|---|---|
| Impedance | Admittance | | Q45 | Q44 |
| 1Ω | 10S | 100Ω | ON | ON |
| 10Ω | 1S | 100Ω | ON | ON |
| 100Ω | 100mS | 100Ω | ON | ON |
| 1kΩ | 10mS | 100Ω | ON | ON |
| 10kΩ | 1mS | 1kΩ | ON | OFF |
| 100kΩ | 100μS | 10kΩ | OFF | OFF |
| 1MΩ | 10μS | 10kΩ | OFF | OFF |

Note: The table above shows the setting of the A1Q45 and Q44 attenuator switches for each measurement range. This table applies when the test signal level is greater than 70mV.

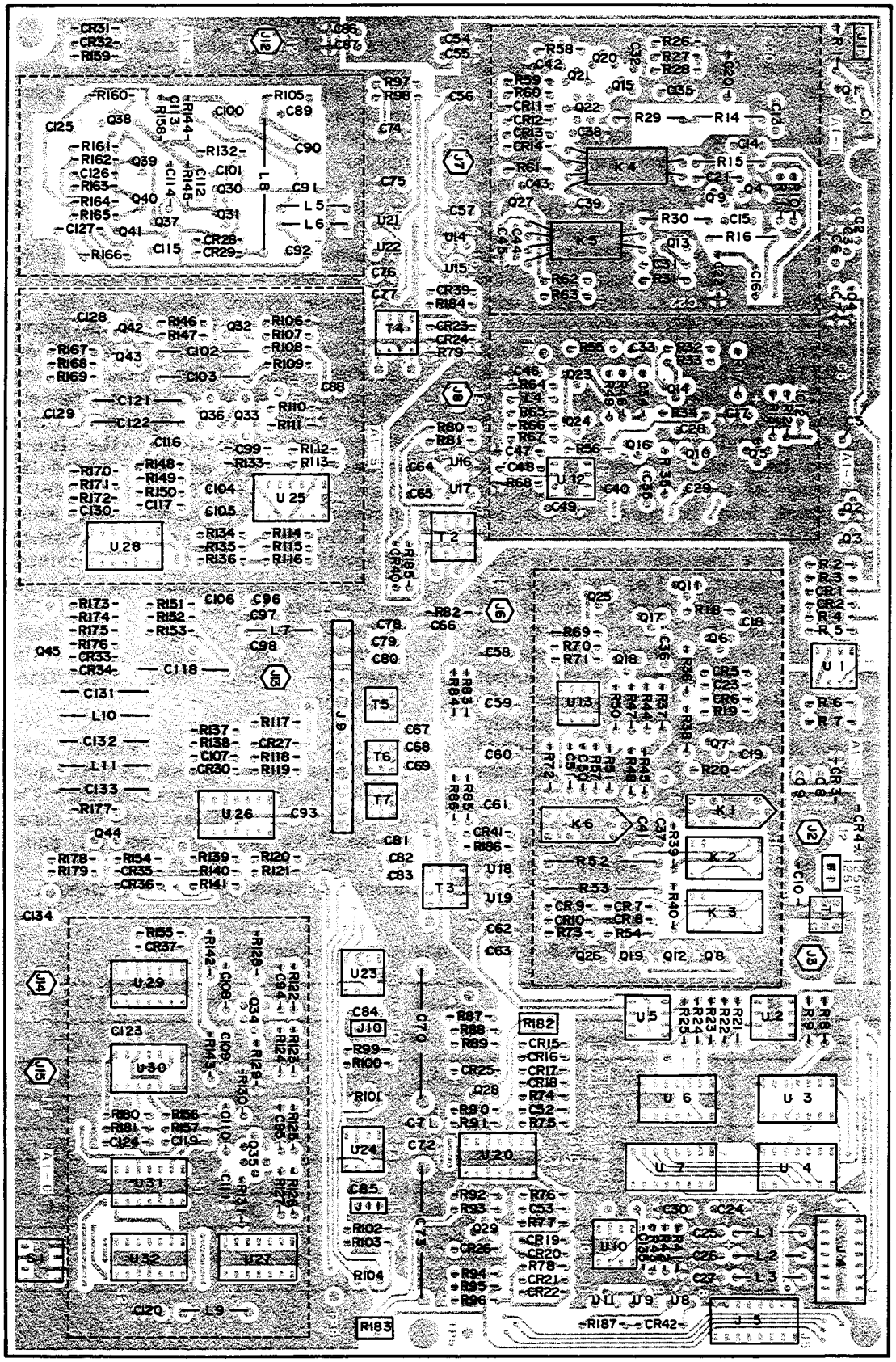

Figure 8-43. A1 Range Resistor/Null Detector Board Assembly Component Locations.

A1 RANGE RESISTOR/NULL DETECTOR (P/N 04192-66501) 1 OF 3

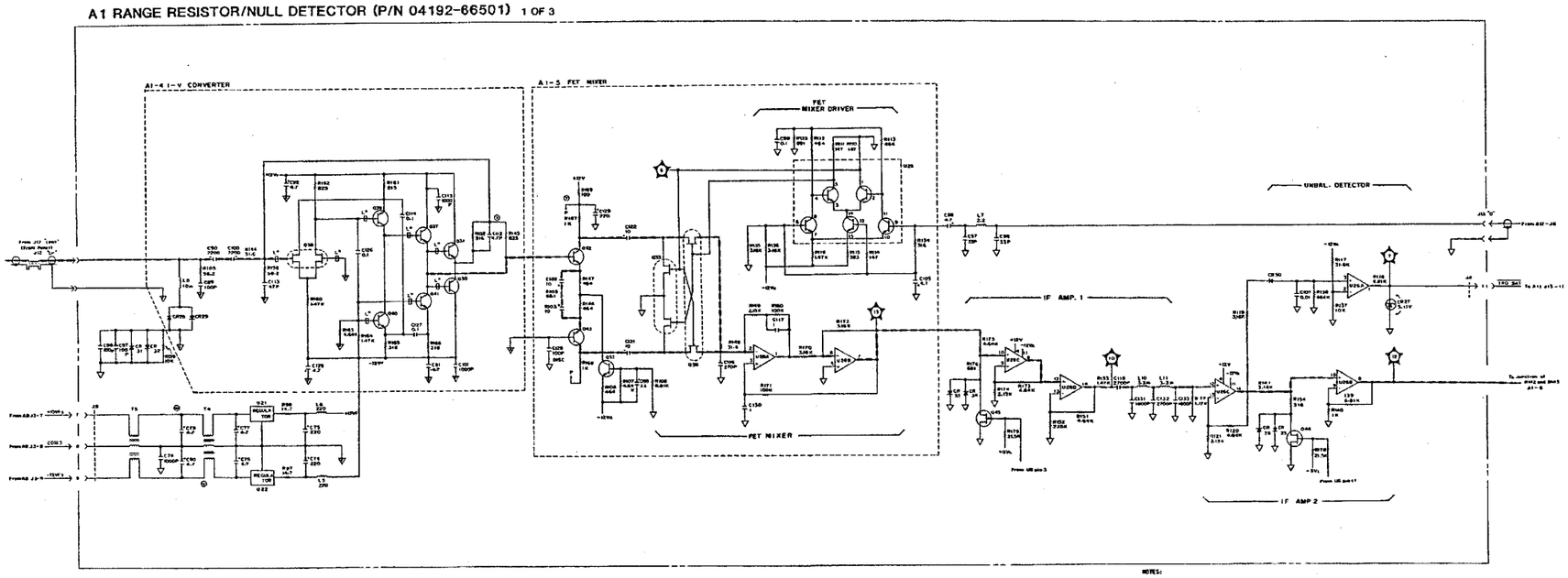


NOTES:

1. REFERENCE DESIGNATIONS WITHIN THIS ASSEMBLY ARE ABBREVIATED. PREFIX ABBREVIATION WITH ASSEMBLY NUMBER FOR COMPLETE REFERANCE DESIGNATOR.
2. UNLESS OTHERWISE INDICATED:
   RESISTANCE IN OHMS (Ω)
   CAPACITANCE IN MICROFARADS (μF)
   INDUCTANCE IN MICROHENRIES (μH)
3. TO MOUNT THE THREE TERMINAL POSITIVE AND NEGATIVE VOLTAGE REGULATORS P/N 1826-0274, -0275, -1076 AND -0280), REFER TO THE ILLUSTRATION SHOWN BELOW.

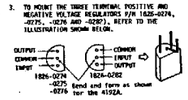


Figure 8-44. A1 Range Resistor/Null Detector Board Assembly Schematic Diagram (sheet 1 of 3).

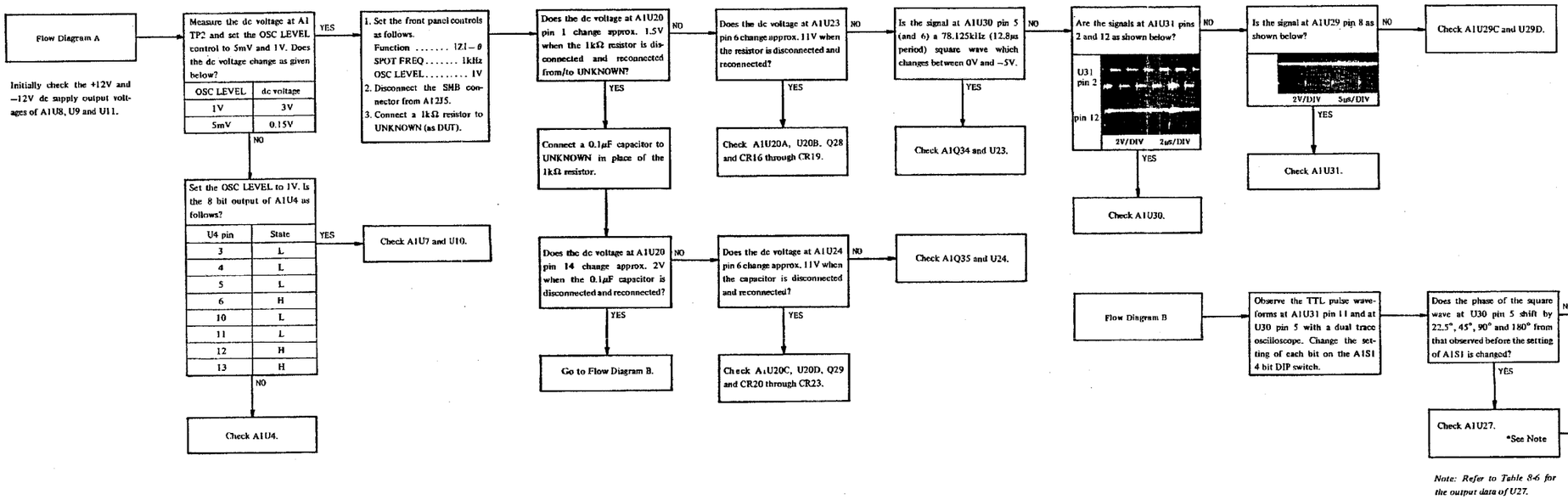


*Note: Refer to Table 8-6 for the output data of U27.*

**Figure 8-45. A1 Range Resistor/Null Detector Board Troubleshooting Flow Diagram — 2 of 3.**

8-129. A1 RANGE RESISTOR/NULL DETECTOR

8-130. Null Detector (2) : Phase Detector and Phase Tracking Circuit

8-131. The unbalance vector IF signal from the IF Amplifier is applied to the dual phase-detector, which simultaneously separates the vector into a set of orthogonal phase components. The Q34A and Q34B synchronous switches of the 0 ° phase detector alternately turn on and off as driven by the 0 ° phase square wave at the same frequency as the IF vector signal. With this synchronous switching, the phase detector chops off segments of the IF vector signal every other half cycle, coincident with the on-off cycles of the switches. See Figure 8-46.

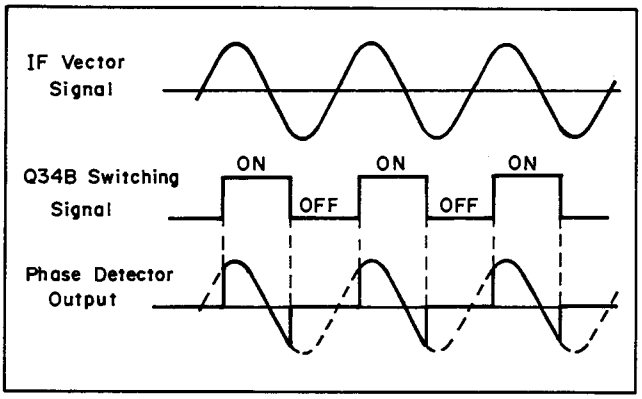


Figure 8-46. Phase Detector Circuit Operation

The vector signal segments flow into the U23 integrator each time Q34B is on (Q34A is off). Actually, the waveform of the phase detector output can not be observed because of the neutralization of the potential (virtual ground) at the feedback node of the integrator input. If Q34B chops off the segments between $\theta$ and $\theta+180$ ° phase angles of the vector IF signal, the averaged voltage of the output is given as :

$$E_0 = k\,\mathbf{e}\cos\theta$$

where, $E_0$ is the averaged voltage of the output and $\mathbf{e}$ is the vector IF signal voltage.

On the other hand, the -90 ° phase detector (Q35A and Q35B) operates from the same vector IF signal input, but follows the synchronous timing for the other set of drive signals, which are -90 ° out of phase with those for the 0 ° phase detector. The -90 ° phase detector thus yields segments between -90 ° and +90 ° phase angles of the vector IF signal. The averaged voltage of the -90 ° phase detector output is :

$$E_0 = k\,\mathbf{e}\cos(\theta-90\,°) = k\,\mathbf{e}\sin\theta$$

Accordingly, the integrated (averaged) voltages from the U23 and U24 integrators are proportional to the magnitudes of the 0 ° and -90 ° orthogonal phase components of the vector IF signal, respectively.

Though the vector of the IF signal is similar to the original unbalance current vector, it has a different phase angle which depends on the phase angle of the local frequency signal input to the mixer. Therefore, to make the 0 ° and -90 ° component outputs of the Phase Detector proportional to the components of the unbalance current vector, the synchronous timing of the phase detection must be properly adjusted. Additionally, to compensate the balancing operation for the frequency dependent phase errors in the balance control loop, the phase angle of the phase detector drive signals must be controlled regarding the test frequency. The difficulty in this phase control is obviated by the advantage of the auto balance bridge operating principle. Because a phase error in the balance control loop causes an unbalance current input to the Null Detector and the feedback balance control is quickly repeated until the unbalance current is minimum, a small phase detection error does not affect balance accuracy.

This allows an approximate control for the phase detector drive signals to be used for these requirements. The Phase Tracking Circuit provides the capability of shifting the phase of both the 0 ° and -90 ° phase detector drive signals in 360 °/16 (= 22.5 °) steps. To digitally perform this phase shift, the phase detector drive signals are produced from a 16 IF signal (16 times the IF frequency). The U31 preset counter outputs a trigger clock pulse every four cycles of the 16 IF input; thus, driving the U30 quadrature phase generator at a 4 IF frequency. The four outputs of the U30 flip flops each have a frequency that is 1/4 the clock input frequency (that is, IF), and the timing for each outout differs from the other three outputs by one, two, and three cycles of the 4 IF signal, respectively. Accordingly, the phase angles of the quadrature phase detector outputs differ by 90 °. The U30A output signals provide symmetrical 0 ° and 180 ° drive signals for the 0 ° phase detector. The U30B output signals are a set of -90 ° and 90 ° drive signals for the -90 ° phase detector.

As the U31 preset counter starts counting the number of 16 IF input pulses from the binary number programmed in the 4 bit preset input and resets U30 each time it overflows, the timing for the quadrature phase generator can be controlled by changing the preset data for the counter. Increasing the preset number by 1 advances the timing for setting the quadrature phase generator by one cycle of the 16 IF signal; thus, shifting the phase detector drive signals by 22.5 ° corresponding to 1/16 cycle.

The preset number is obtained from the setting of the S1 Phase Tracking Adjustment switch and the phase compensation data stored in the U27 serial register. The S1 switch is set manually to find the appropriate phase of the phase detector drive signals for the balance control at low test frequencies. The U32 4-bit full adder sums the S1 binary number and the phase compensation data in U27, based on the typical frequency-phase characteristic of the balance control loop from the program memory.

The gain of the V.G Drivers exponentially increases for a greater output voltage from the Phase Detector to feed sufficient control voltage to the Modulator (A12 board). As the control input sentivity of the Modulator lowers with increases in the control voltage (caused by the characteristic of the PIN diode attenuators), the V.G Drivers provide such voltages from the phase detector output that compensate the modulator output for decreases in input sensitivity. At the input stages of the U20A and U20D amplifiers, the diode networks (CR16 through CR23) provide appropriate compensation characteristic using a tangential approximation of the ideal curve. As a result, the overall gain of the balance control loop is maintained nearly constant, preventing the balancing time from becoming longer because of insufficient loop gain and eliminating the possibility of self-oscillation caused by excessive loop gain.

Test signal level control data is transferred to the U4 serial register from the digital control section and is set in the U7 D-A Converter in parallel fashion. For a test signal level of 1V, the input data is 200 in decade representation. The U10 I-V converter amplifier outputs a voltage, proportional to the given data, to the test signal level control circuit on the A12 board.

Table 8-6. Phase-Tracking Control Data States

| Test Frequency | | A1U27 pins | | | | |
|---|---|---|---|---|---|---|
| | | 3 | 4 | 5 | 6 | 10 |
| 5 ~ 180Hz | | H | L | L | L | H |
| 180 ~ 450Hz | | L | L | L | L | H |
| 450 ~ 1.5kHz | | H | H | H | H | H |
| 1.5k ~ 38kHz | | L | H | H | H | H |
| 38kHz ≀ 392kHz | IF = 69.444kHz | H | L | H | H | L |
| | IF = 78.125kHz | L | H | H | H | L |
| 392k ~ 13MHz | | *Npt | | | | L |

L = 0, H = 1

*Npt is the binary number calculated by the equation :

$$Npt = 15 - f(\ell + 0.5) \times 0.16$$

where, f is test frequency in MHz,
$\ell$ is test cable length in m.

The calculated number is rounded to the nearest integer and assigned as the Npt value.

## A1 BOARD FUNCTIONAL TEST (1)

1. I-V Converter Gain Test

   1) Connect a 100Ω resistor between the $H_{CUR}$ and $L_{POT}$ terminals (leave the other UNKNOWN terminals open).

   2) Connect the probe of an oscilloscope to the emitter of A1Q37.

   3) Set the OSC LEVEL to 10mV and, then, 150mV.

   4) The change in the amplitude of the signal on the CRT should be less than 250mV peak.

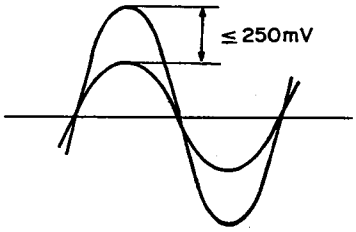


## A1 BOARD FUNCTIONAL TEST (2)

1. Phase Tracking Register Functional Test

   1) Observe the waveforms at A1U29 pin 11 and U30 pin 5 with a dual trace oscilloscope.

   2) Press [Blue], [6] (SELF TEST) and [6] keys to set the instrument to SELF TEST 6.

   3) Press TRIGGER HOLD/MANUAL key and verify that the phase angle of the waveform at U30 pin 5 additively shifts by 22.5° in reference to the signal at U29 pin 11 (shifts by 360° when the key is pressed 16 times).

2. D-A Converter Operating Test

   1) Connect the input leads of a DVM between A1TP2 and circuit common.

   2) Set the OSC LEVEL to 1V.

   3) The readout on the DVM should be between 2.7V and 3.3V.

   4) Set the OSC LEVEL to 10mV.

   5) The readout on the DVM should be between 0.27V and 0.33V.

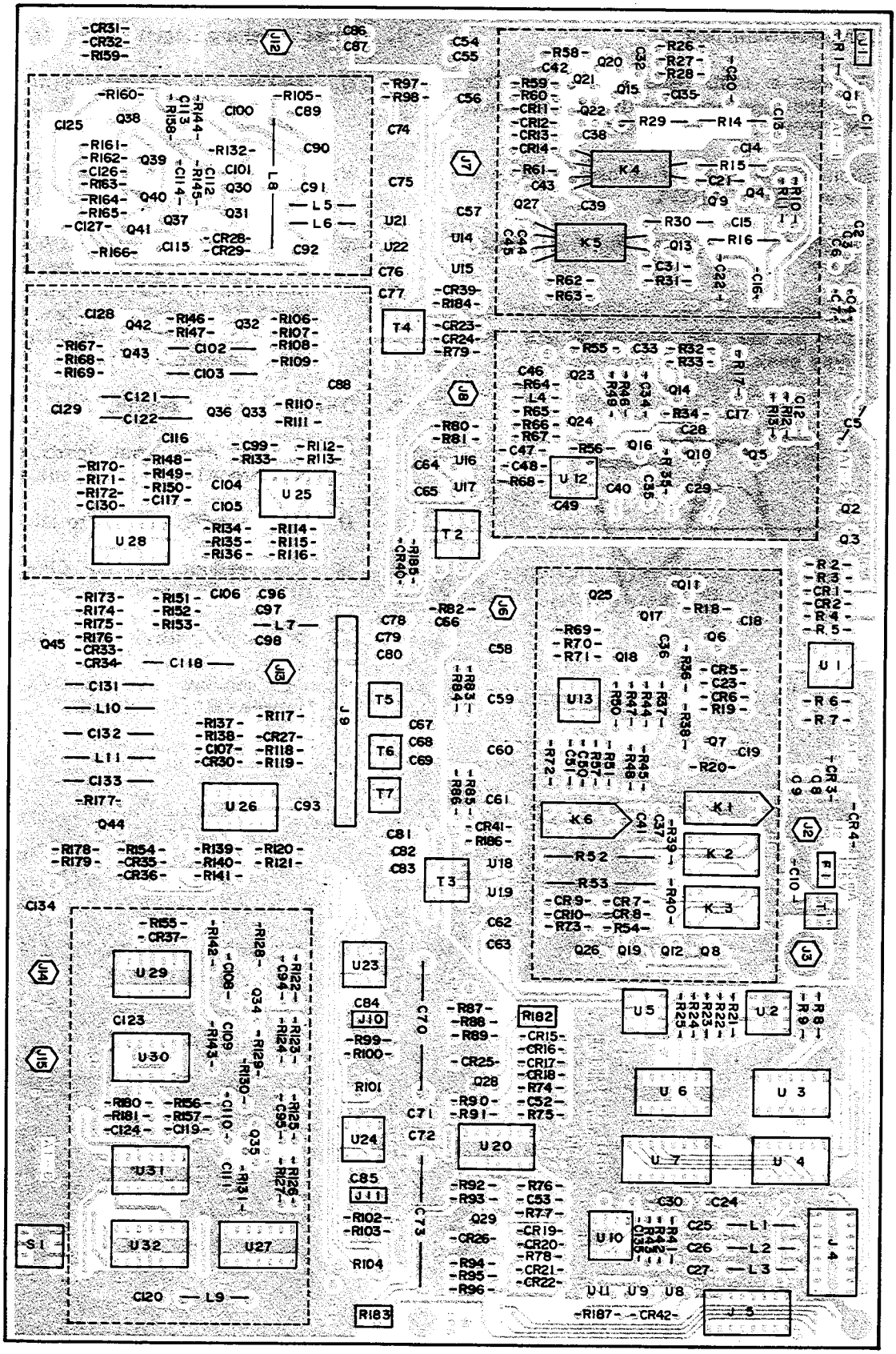


Figure 8-43. A1 Range Resistor/Null Detector Board Assembly Component Locations.

A1 RANGE RESISTOR/NULL DETECTOR (P/N 04192-66501) 2 OF 3

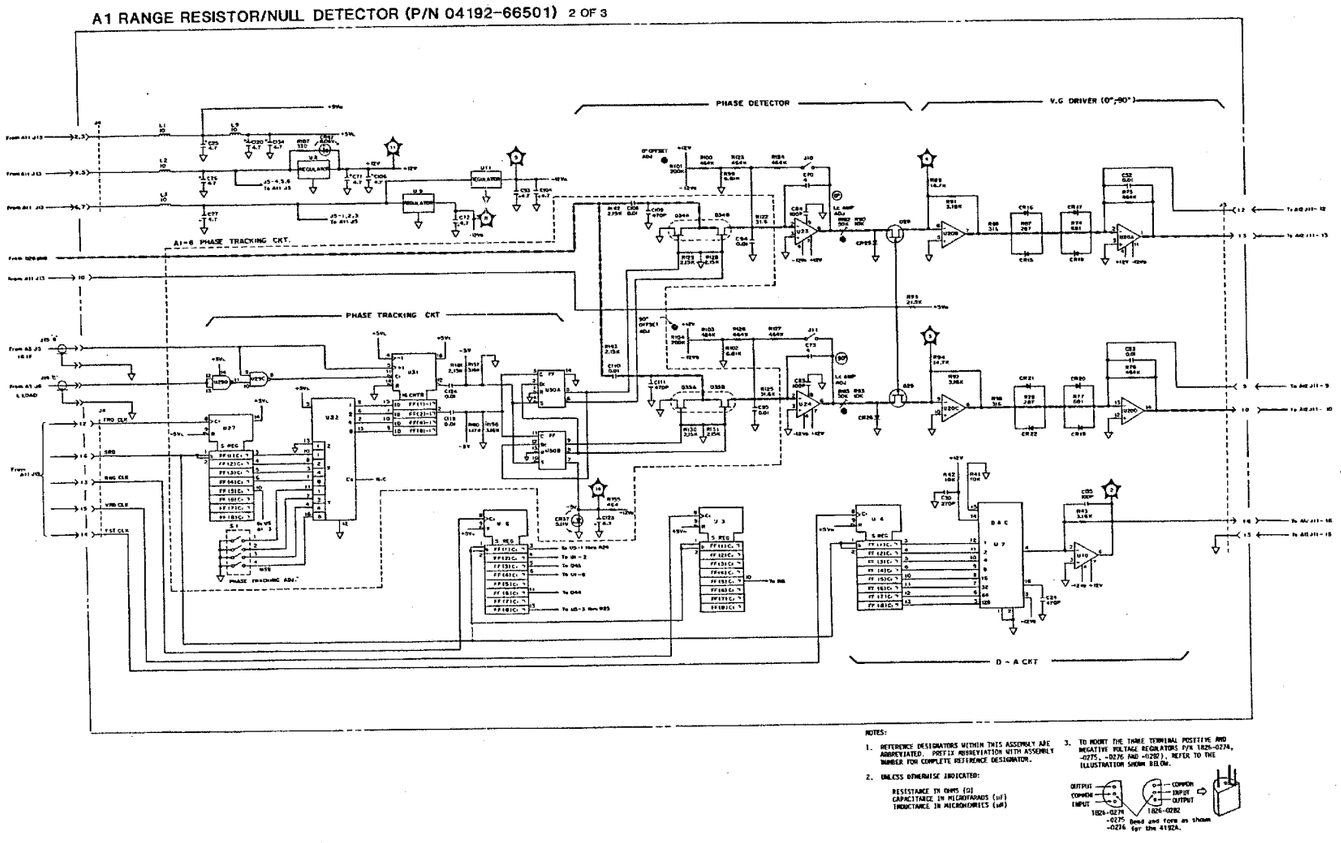


NOTES:

1. REFERENCE DESIGNATORS WITHIN THIS ASSEMBLY ARE ABBREVIATED. PREFIX ABBREVIATION WITH ASSEMBLY NUMBER FOR COMPLETE REFERENCE DESIGNATOR.
2. UNLESS OTHERWISE INDICATED:
   RESISTANCE IN OHMS (Ω)
   CAPACITANCE IN MICROFARADS (uF)
   INDUCTANCE IN MICROHENRIES (uH)
3. TO MOUNT THE THREE TERMINAL POSITIVE AND NEGATIVE VOLTAGE REGULATORS P/N 1826-0274, -0275, -0276 AND -0282), REFER TO THE ILLUSTRATION SHOWN BELOW.




Figure 8-47. A1 Range Resistor/Null Detector Board Assembly Schematic Diagram (sheet 2 of 3).

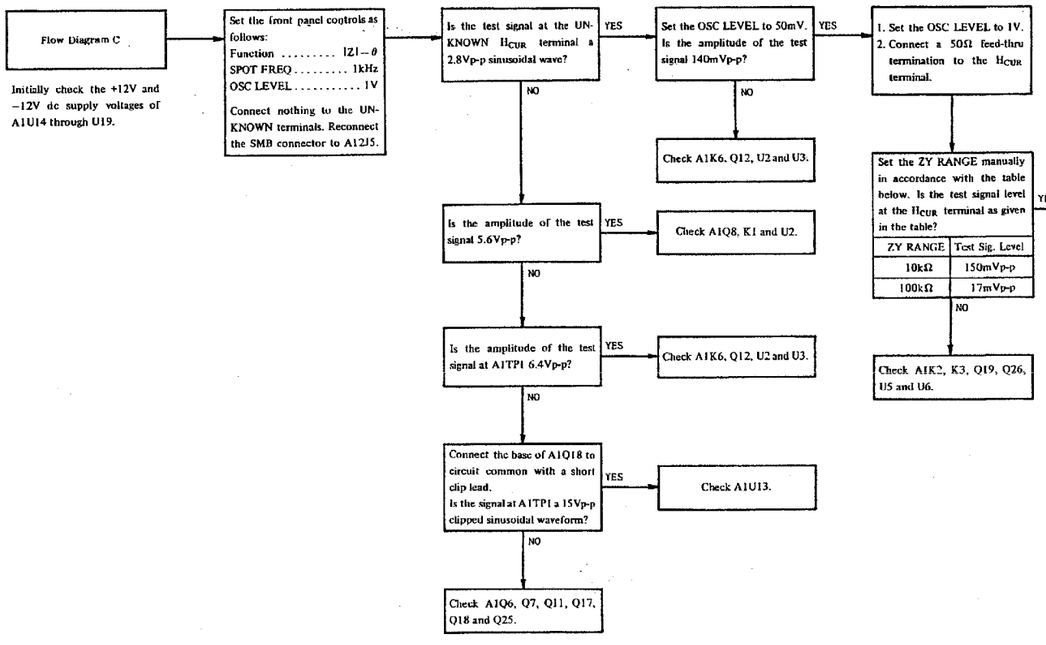


**Table A. Switch Control**

| ZY RANGE | Q4 | Q9 | Q13 | Q27 |
|---|---|---|---|---|
| 1kΩ | OFF | OFF | ON | OFF |
| 10kΩ | ON | ON | OFF | OFF |
| 100kΩ | ON | ON | ON | ON |

To check the on-off states of the switches, observe the signal levels at the collectors of A1Q4, Q13 and the emitter of Q27. When the switch is on, the signal disappears from CRT.

**Figure 8-48. A1 Range Resistor/Null Detector Board Troubleshooting Flow Diagram – 3 of 3.**

8-132. A1 RANGE RESISTOR/NULL DETECTOR

8-133. Range Resistor and Power Amplifiers

8-134. The schematic diagram in Figure 8-49 includes the range resistor circuit and the two wide-band power amplifiers which provide the test signal and the range resistor currents. As these circuits are part of the auto-balance bridge, circuit common is floating above ground. The DUT Power Amplifier (Q6, Q7, Q11, A17, Q18 and Q25) not only increases the amplitude of the test signal to the specified voltages but also enhances the ability to supply the test signal current to low-impedance DUTs.

To minimize the dc offset voltage of the test signal output, dc feedback from U13 maintains the dc potential at the output of the DUT Power Amplifier at zero volts.

When the setting of the test signal level is below 70mVrms, the K6 relay functions so that the voltage divider, consisting of the R45 and R51, attenuates the test signal output from the DUT Power Amplifier by 1/10. The K2 and K3 relays select the output impedance for the test signal (at the $H_{CUR}$ terminal) as 100Ω, 1kΩ or 10kΩ, depending on the setting of the measurement range. Source resistance selection is performed as directed by the control data from the measurement program. At test frequencies above 38kHz, the source resistor is always 100Ω. As the amplitude-phase measurements require a constant signal source impedance of 50Ω, the K1 relay by-passes the selective source resistor circuit used in impedance measurements.

An internal or external bias voltage is applied in series with the four-terminal pair measurement circuit loop through the bias network between the outer conductor of the $H_{CUR}$ lead and the floating circuit common. The T1 balan transformer and the paralleled C10 and C11 capacitors cut the measurement circuit loop to insert a bias voltage source, yet making the additive impedance to the test signal current loop very low. Since a floating measurement circuit ideally isolated from ground is susceptible to noise interference, C8 and C9 properly reduce the isolation impedance. CR3 and CR4 prevent the measurement circuit from having a charged potential with respect to ground. Similar circuits concerning the isolation impedance and the protective purpose are used at several inputs/outputs of the floating measurement circuit.

The $R_R$ Power Amplifier has a feedback circuit configuration similar to the DUT Power Amplifier to minimize the dc offset voltage of the range resistor signal. Its output current flows through one of the range resistors selected from among 100Ω, 1kΩ and 10kΩ. The range resistor values are determined by the practical frequency limitations of the resistor elements. The phase compensation capacitors cancel the effects of the residual parameters involved in the actual circuit on the PC board, in addition to those inherent in the range resistors. Thereby, the accuracy of the resistance values and pure resistance are maintained over the full frequency range. When K4 or K5 is on, the contact of the relay connected to the $L_{CUR}$ line passes the range resistor current, yielding a small voltage drop caused by the contact resistance. Through the other contact of the (dual interlocking) relay, the CMR Amplifier (Q15, Q20, Q21 and Q22) detects this voltage drop to compensate the measured range resistor vector voltage for the influence of the relay contact resistance. When K4 relay is off, the Q4 and Q9 switches are set to on to conduct the leakage currents, which flow through the stray capacitances between the contacts of the relay, to circuit common. Because of these switches, the leakage current does not become a by-pass current additive to the correct range resistor current, and, thus, stray capacitances do not affect the accuracy of the measurement. Similarly, the Q13 switch eliminates the effects of stray capacitance present between the contacts of the K5 relay.

When the range resistor is 10kΩ, the Q27 switch connects C13 to circuit common to improve the accuracy of the range resistor current at high frequencies. Diodes CR12 through CR15 protect the range resistors from any harmful dc voltage that may be inadvertently applied to the $L_{CUR}$ terminal.

Table 8-7. Relationship of the Source Resistor and the Measurement Range

| Impedance Range | Test Signal Level ≥70mV | | | Test Signal Level <70mV | | |
|---|---|---|---|---|---|---|
| | Source R | K2 | K3 | Source R | K2 | K3 |
| 1Ω | 100Ω | ON | ON | 100Ω | ON | ON |
| 10Ω | 100Ω | ON | ON | 100Ω | ON | ON |
| 100Ω | 100Ω | ON | ON | 100Ω | ON | ON |
| 1kΩ | 100Ω | ON | ON | 100Ω | ON | ON |
| 10kΩ | 1kΩ | OFF | ON | 1kΩ | OFF | ON |
| 100kΩ | 10kΩ | OFF | OFF | 1kΩ | OFF | ON |
| 1MΩ | 10kΩ | OFF | OFF | 1kΩ | OFF | ON |

Note : This table applies when the test frequency is 38kHz or below.

Table 8-8. Relationship of the Range Resistor and the Measurement Range

| Impedance Range | Test Signal Level ≥70mV | | | Test Signal Level <70mV | | |
|---|---|---|---|---|---|---|
| | Range R | K4 | K5 | Range R | K4 | K5 |
| 1Ω | 100Ω | ON | OFF | 1kΩ | OFF | ON |
| 10Ω | 100Ω | ON | OFF | 1kΩ | OFF | ON |
| 100Ω | 100Ω | ON | OFF | 1kΩ | OFF | ON |
| 1kΩ | 100Ω | ON | OFF | 1kΩ | OFF | ON |
| 10kΩ | 1kΩ | OFF | ON | 10kΩ | OFF | OFF |
| 100kΩ | 10kΩ | OFF | OFF | 10kΩ | OFF | OFF |
| 1MΩ | 10kΩ | OFF | OFF | 10kΩ | OFF | OFF |

Note : Q4 and Q9 are on when K4 is OFF. Q13 is on when K5 is OFF.

A1 BOARD FUNCTIONAL TEST (3)

1. Test Signal DC Output Offset Voltage Test

   1) Connect nothing to the UNKNOWN terminals.

   2) Set the OSC LEVEL to 5mV.

   3) Connect the input leads of DVM between A1TP1 and circuit common.

   4) The readout on the DVM should be 0±12.5mVdc.

2. $L_{CUR}$ Amplifier DC Output Offset Voltage Test

   1) Disconnect the SMB connector from A1J8.

   2) Connect the input leads of a DVM between the $L_{CUR}$ terminal and circuit common.

   3) The readout on the DVM should be 0±1mVdc.

   4) Reconnect the SMB connector to A1J8.

3. $H_{CUR}$ Amplifier Gain Test

   1) Observe the test signal at the base of A1Q25 and that at TP1.

   2) The amplitude at TP1 should be higher than that at the base of A1Q25 by a factor of 68.

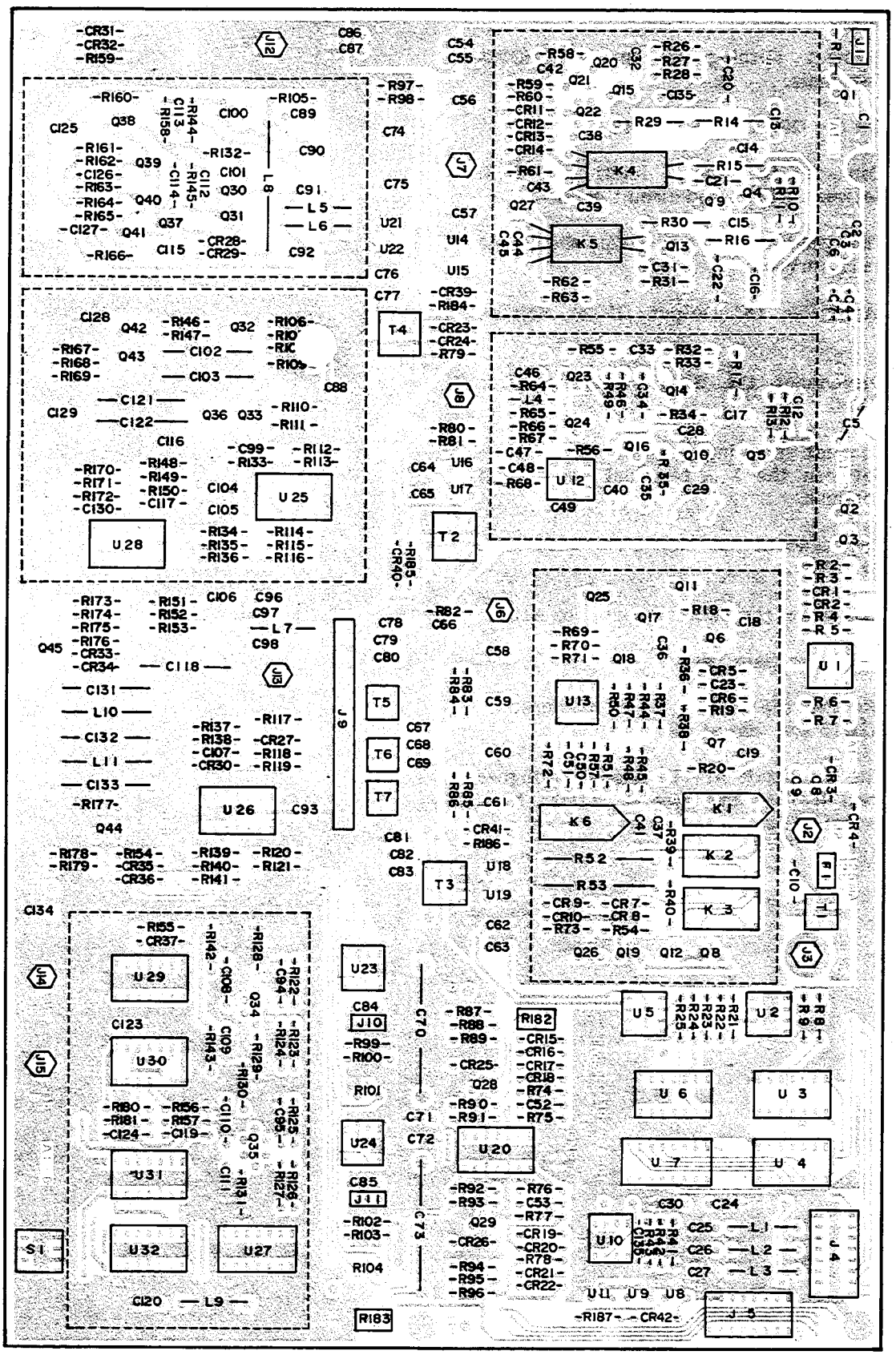

Figure 8-43. A1 Range Resistor/Null Detector Board Assembly Component Locations.

A1 RANGE RESISTOR/NULL DETECTOR (P/N 04192-66501) 3 OF 3

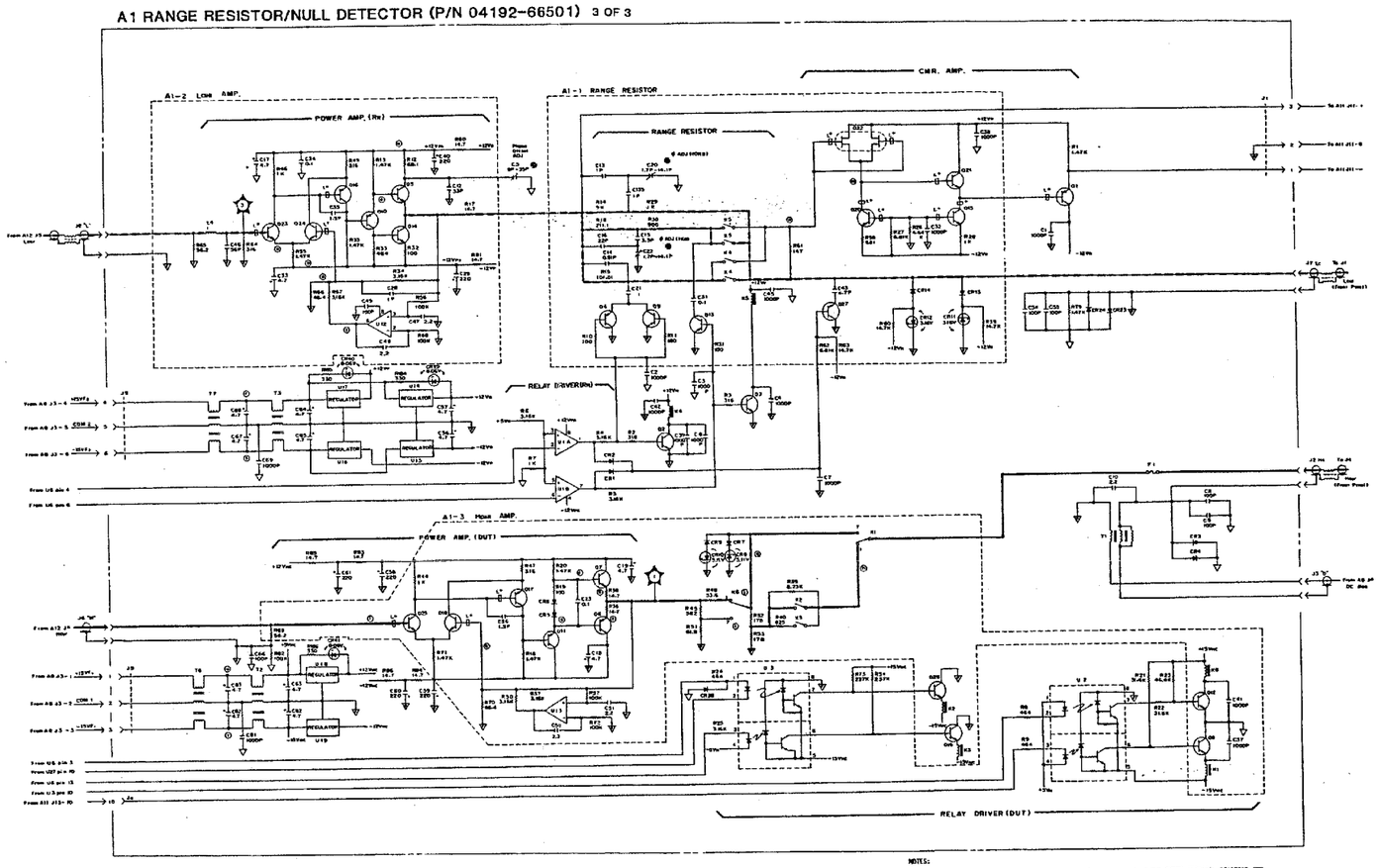


NOTES:

1. REFERENCE DESIGNATORS WITHIN THIS ASSEMBLY ARE ABBREVIATED. PREFIX ABBREVIATION WITH ASSEMBLY NUMBER FOR COMPLETE REFERENCE DESIGNATOR.
2. UNLESS OTHERWISE INDICATED:
   RESISTANCE IN OHMS (Ω)
   CAPACITANCE IN MICROFARADS (μF)
   INDUCTANCE IN MICROHENRIES (μH)
3. TO MOUNT THE THREE TERMINAL POSITIVE AND NEGATIVE VOLTAGE REGULATORS P/N 1826-0274, -0275, -0276 AND -0292), REFER TO THE ILLUSTRATION SHOWN BELOW.

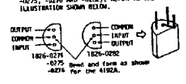


Figure 8-49. A1 Range Resistor/Null Detector Board Assembly Schematic Diagram (sheet 3 of 3).

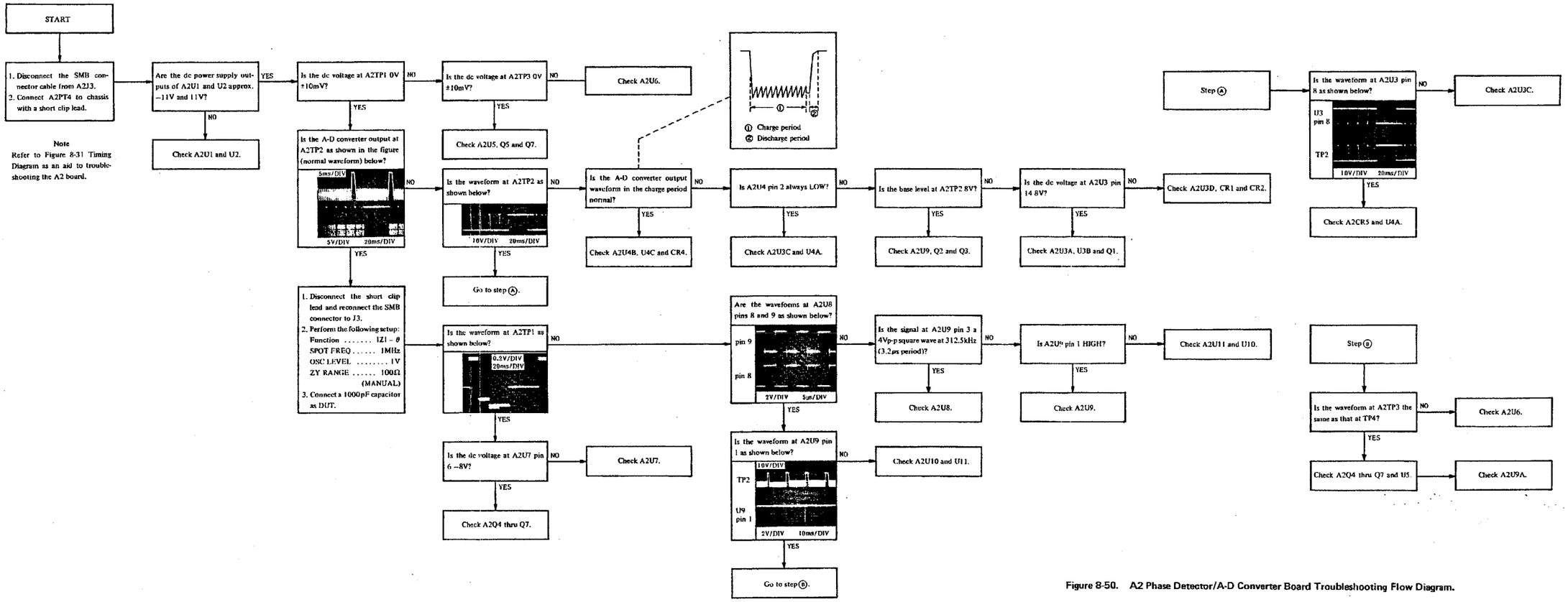


Figure 8-50. A2 Phase Detector/A-D Converter Board Troubleshooting Flow Diagram.

## 8-135. A2 PHASE DETECTOR AND INTEGRATOR

8-136. The A2 board functions to detect the orthogonal phase components of the vector IF signal and to convert their magnitudes into time interval data. The A2 board, therefore, consists of two major circuit blocks : the Phase Detector and the A-D Converter. Measurement vector information is represented by the amplitude and phase of the IF signal at the input of the A2 board. The Phase Detector separates this signal into the voltage signals (scalar) representing the phase components that are 90 ° out of phase with each other. Conceptually, this is conversion from a polar representation of the vector (that is, absolute amplitude and phase angle) to cartesian (orthogonal coordinates) representation which is possible with a combination of voltage values only. The phase detection is performed as follows :

The basic phase detector circuit is composed of the R30 input resistor and Q4 and Q5 FETs which act as synchronous switches. Square wave drive signals at the FET's gates, which have reverse phases, cause Q4 and Q5 to alternately turn on and off. During half cycle periods of the drive signal to set Q5 to on (Q4 is off), the vector IF input signal is applied to the input of the U5 integrator amplifier. During the subsequent half cycle period, the switches intercept the IF signal. Thus, the operation of the Q4 and Q5 switches chops off a portion of the IF vector signal for each cycle. As the chopping frequency is the same as the IF, the segments of the vector IF signal exhibit a regular waveform determined by the timing of the switches in reference to the IF input signal. See Figure 8-51. The averaged voltage of the half cycle segments is proportional to the IF vector component in-phase with the drive signals. If the drive signals are, for example, θ degree (and θ + 180 degrees) out of phase with the IF signal, the average voltage is given as :

$$Ex = k\,\mathbf{e}\cos\theta \qquad (k = \text{constant})$$

where, Ex is the averaged voltage and $\mathbf{e}$ is the voltage of the IF input signal.

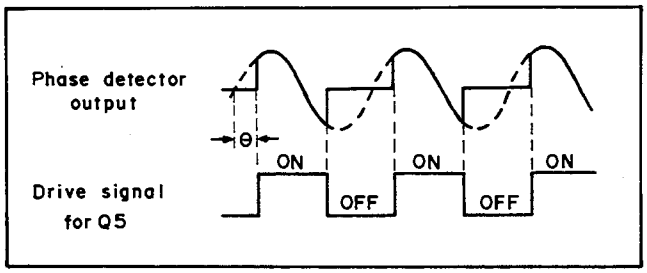


Figure 8-51. Basic Phase Detection.

By shifting the phase of the drive signals to θ-90 ° (and θ + 90 °), the Q4 and Q5 switches chop off portions of the IF signal at periods different by 90 ° from those taken before shifting the phase. The average voltage of the output for the 90 ° phase shifted drive signals is :

$$Ey = k\,\mathbf{e}\cos(\theta - 90°)$$
$$= k\,\mathbf{e}\sin\theta$$

As is obvious from these equations and the vector diagram in Figure 8-52, the phase detector outputs are the orthogonal phase components of the vector IF input signal.

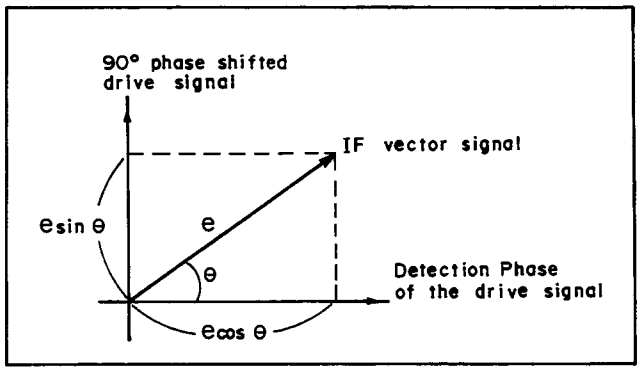


Figure 8-52. Phase Detection Vector Diagram.

In the basic phase detection method described above, the output of the phase detector is zero during the cut-off state of the IF signal repeated every other half cycle. The waveform of the IF signal in these blanking periods is, if the polarity is reversed, exactly the same as the waveform segments produced by the chopping operation of Q4 and Q5. The Q6 and Q7 switches, as well as the U6 inverter, act to fill in the blank periods with the same waveform segments and to improve phase detection efficiency. The vector IF signal routed to U6 is inverted and then chopped off similarly to the output from the Q4 and Q5 circuit. Because the timing for Q6 and Q7 are opposite to that for Q4 and Q5, the resultant waveform is produced during the intermissions of the output from the Q4 and Q5 circuit. Figure 8-53 shows the waveform of the "full wave" phase detector output.

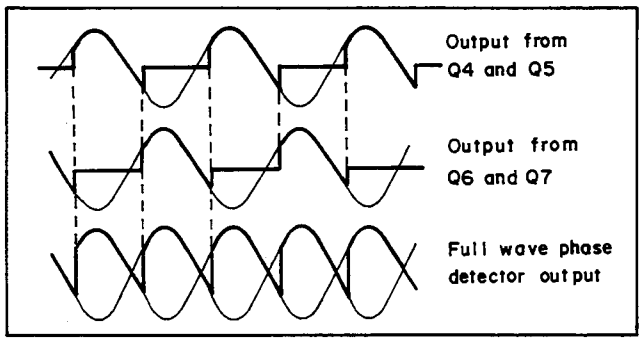


Figure 8-53. Full Wave Phase Detection.

A pair of the phase detector drive signals is synchronously developed with the 4IF signal sent from the A3 board. The U8 Divider outputs one cycle of the drive signal per four cycles of the 4IF trigger input. Thus, the frequency of the drive signal coincides with the IF of the phase detector input. When the HPSFT control line goes HIGH, the U10 flip flops set the U11 binary counter at the timing given by the earliest trailing edge of the 4IF signal. Subsequently, the U11 counter output goes LOW for one cycle of the 4IF signal. The U9A gate circuit blocks the transfer of the 4IF trigger signal to the U8 Divider during this period, delaying the timing of the divider output for 1/4 cycle. Consequently, the phase detector drive signals are shifted by 90 ° (1/4 cycle) immediately after the receipt of the HPSFT command. To apply the same detection phases to every measurement, the HSYNC signal resets the Phase Shifter (U10 and U11) and the U8 Divider each time a measurement starts.

A description of the basic theory of the Multi Slope A-D Converter following the phase detector is provided in Paragraph 8-57, so this paragraph offers a supplemental description of the actual circuitry. The U3B Integrator develops a ramp output by charging C12 with a measurement input. As U3A precharges the Integrator to 8V, equal to the positive reference voltage, the integrator ramp output starts from 8V and returns to the same voltage (8V) by discharge. Thus, the zero base level for the integration operating cycles is +8V. During the charge period of the integrator, the HINTG signal goes LOW to hold the Q3 input switch on and Q2 off. These integrator input switches return to their initial states (Q3 off and Q2 on) when the charge period is terminated.

Four comparators contained in U4 change their output logic the instant the integrator output ramp voltage crosses the threshold levels of their individual comparison inputs. In the charge period, the U4A comparator sets the state of the $\overline{\text{LFLVL}}$ line LOW when the ramp voltage, inverted by U3C, reaches +8V. Thereby, the integrator begins discharge just after the ramp reaches -8V. The $\overline{\text{LFCDN}}$ line goes LOW turning the CR4A diode switch off. The current which flows through CR4B, R21, and CR4F from the -8V reference voltage source (U7) causes the integrator to discharge for 512μS.

If the integrator output during the 512μs discharge period is a negative going charge ramp (not a normal, positive going discharge ramp), the U4D OFLW comparator pulls up the HOFLW line to HIGH when the ramp reaches +8.7V.

Note

A reverse polarity ramp during the 512μs period is caused by an excessive charge current from the Phase Detector that is greater than the discharge current fed from the CR4 diode switch network.

The integrator input switch is accurately controlled to determine the charge time in accordance with the measurement program. To eliminate the effects of undesired frequency components in the phase detector output, such as line frequency noise, spurious signals, etc., using the normal mode rejection capability of the integrator, the charge time is automatically set as shown in Table 8-9.

The charge period is terminated when the integrator input switch is turned off. Then, the integrator begins discharging with the current from the CR4B, R21 and CR4F circuit. The SLVL comparator pulls up the HSLVL line to HIGH the instant the fast discharge ramp reaches +7.83V, slightly lower than the zero base level. The $\overline{\text{LSCDN}}$ signal reduces the integrator discharge current to 1/128 by changing the current source circuit to CR4C, R20 and CR4E (from the CR4B, R21 and CR4F). During the vernier ramp period, the integrator discharges at a slower rate (1/128) than that of the fast discharge ramp.

Table 8-9. Integrator Charge Time Control

The integrator charge time, T, is calculated as:

$$T = N \times \frac{1}{fc} \qquad (fc = 1.25MHz)$$

where, N number is determined by the test frequency, f, and the equations shown in the table below. [ ] in the equations is the operator to round the calculated value to an integer.

| Line Freq. | Measurement Mode | Test Frequency | Equation for N |
|---|---|---|---|
| 50Hz | High Speed | 5Hz≤f<400Hz | $N = [\frac{fc}{f}]$ |
| | | f≥400Hz | $N = [[\frac{f}{400}] \times \frac{fc}{f}]$ |
| | Normal | 5Hz≤f< 15Hz | $N = [\frac{fc}{f}]$ |
| | | 15Hz≤f<150Hz | $N = [\frac{3fc}{f}]$ |
| | | f≥150Hz | $N = [[\frac{f}{50}] \times \frac{fc}{f}]$ |
| | Average | 5Hz≤f< 15Hz | $N = [\frac{3fc}{f}]$ |
| | | f≥ 15Hz | $N = [[\frac{f}{5}] \times \frac{fc}{f}]$ |
| 60Hz | High Speed | Same as 50Hz line frequency operation | |
| | Normal | 5Hz≤f< 15Hz | $N = [\frac{fc}{f}]$ |
| | | 15Hz≤f<180Hz | $N = [\frac{3fc}{f}]$ |
| | | f≥180Hz | $N = [[\frac{f}{60}] \times \frac{fc}{f}]$ |
| | Average | Same as 50Hz line frequency operation | |

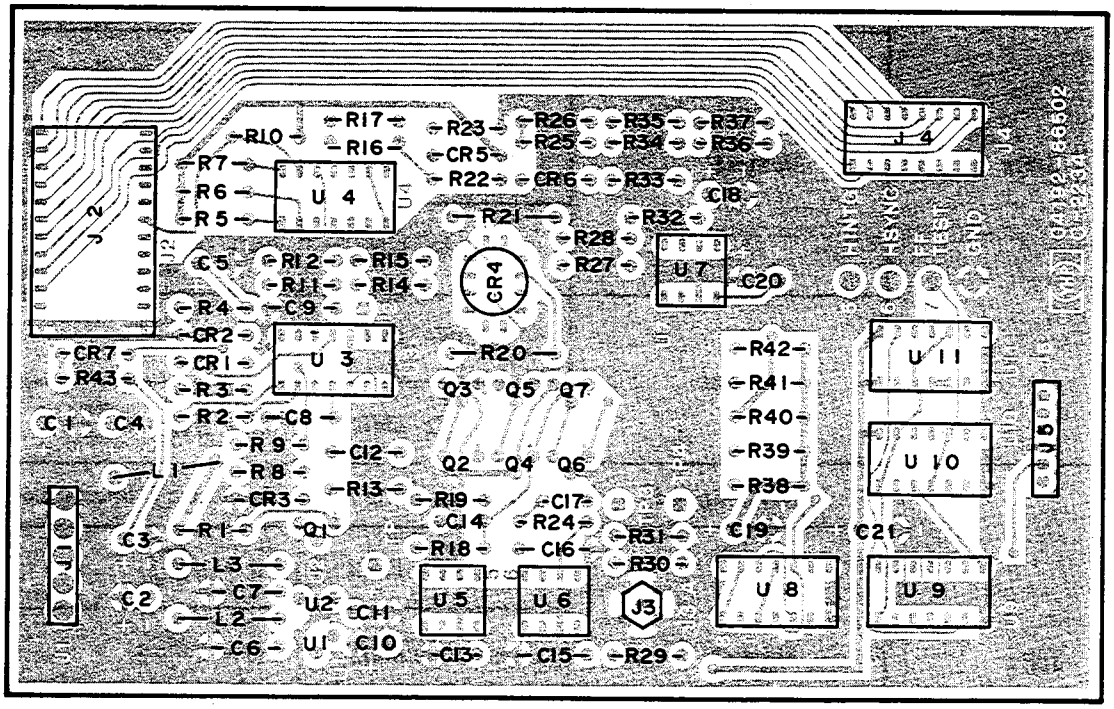


Figure 8-54. A2 Phase Detector/A-D Converter Board Assembly Component Locations.

## A2 PHASE DETECTOR/A-D CONVERTER (P/N 04192-66502)

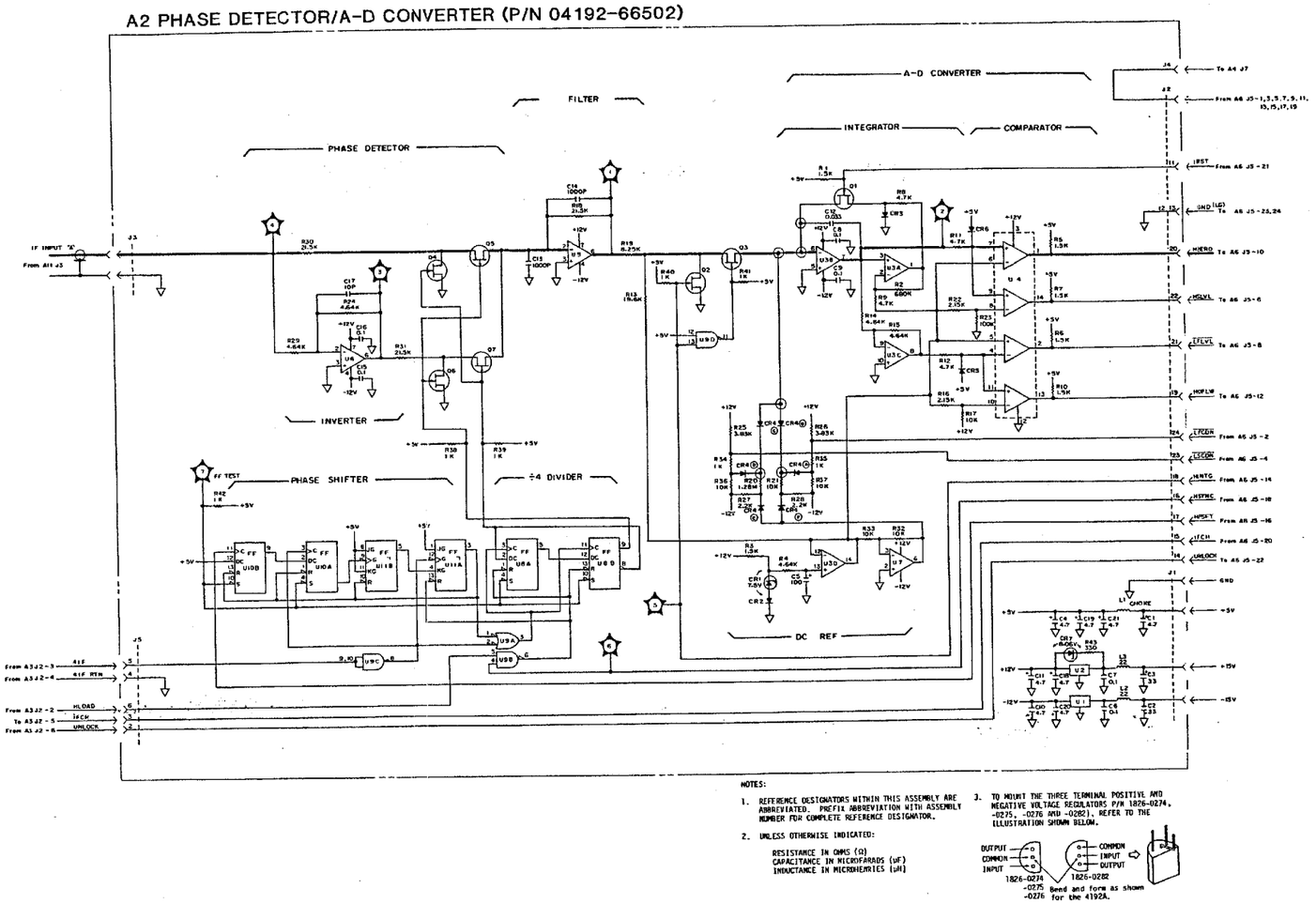


NOTES:

1. REFERENCE DESIGNATORS WITHIN THIS ASSEMBLY ARE ABBREVIATED. PREFIX ABBREVIATION WITH ASSEMBLY NUMBER FOR COMPLETE REFERENCE DESIGNATOR.
2. UNLESS OTHERWISE INDICATED:
   RESISTANCE IN OHMS (Ω)
   CAPACITANCE IN MICROFARADS (uF)
   INDUCTANCE IN MICROHENRIES (uH)
3. TO MOUNT THE THREE TERMINAL POSITIVE AND NEGATIVE VOLTAGE REGULATORS P/N 1826-0274, -0275, -0276 AND -0282), REFER TO THE ILLUSTRATION SHOWN BELOW.




Figure 8-55. A2 Phase Detector/A-D Converter Board Assembly Schematic Diagram.

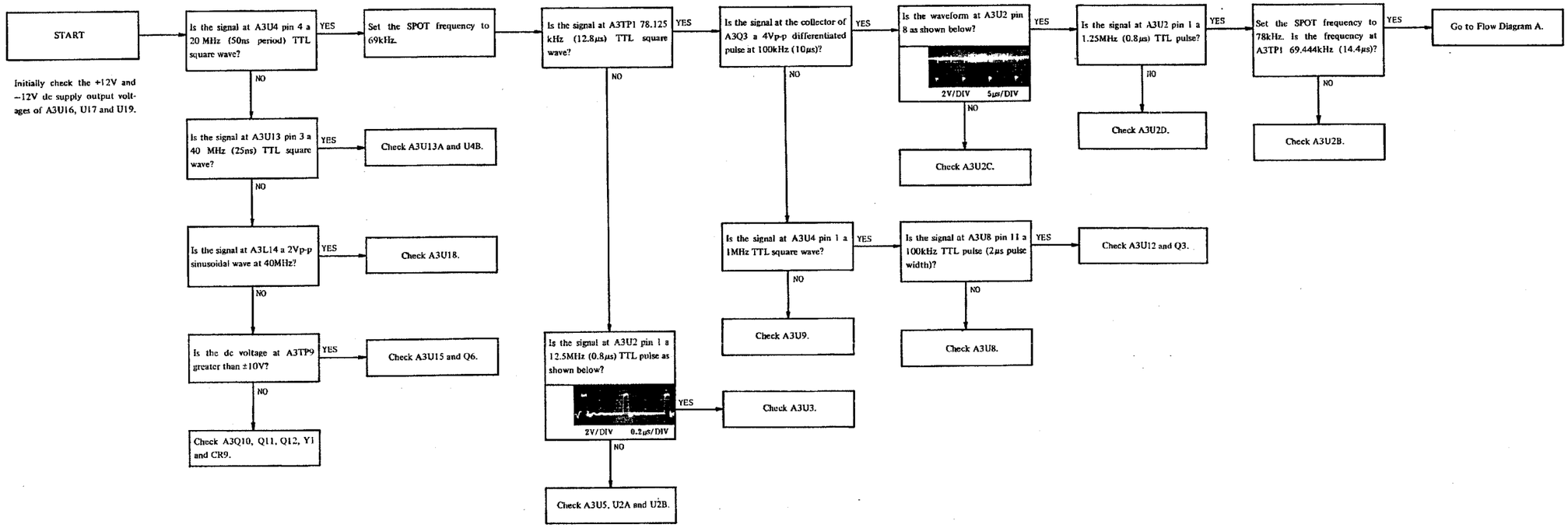


Figure 8-56. A3 Reference Frequency Generator Board Troubleshooting Flow Diagram – 1 of 2.

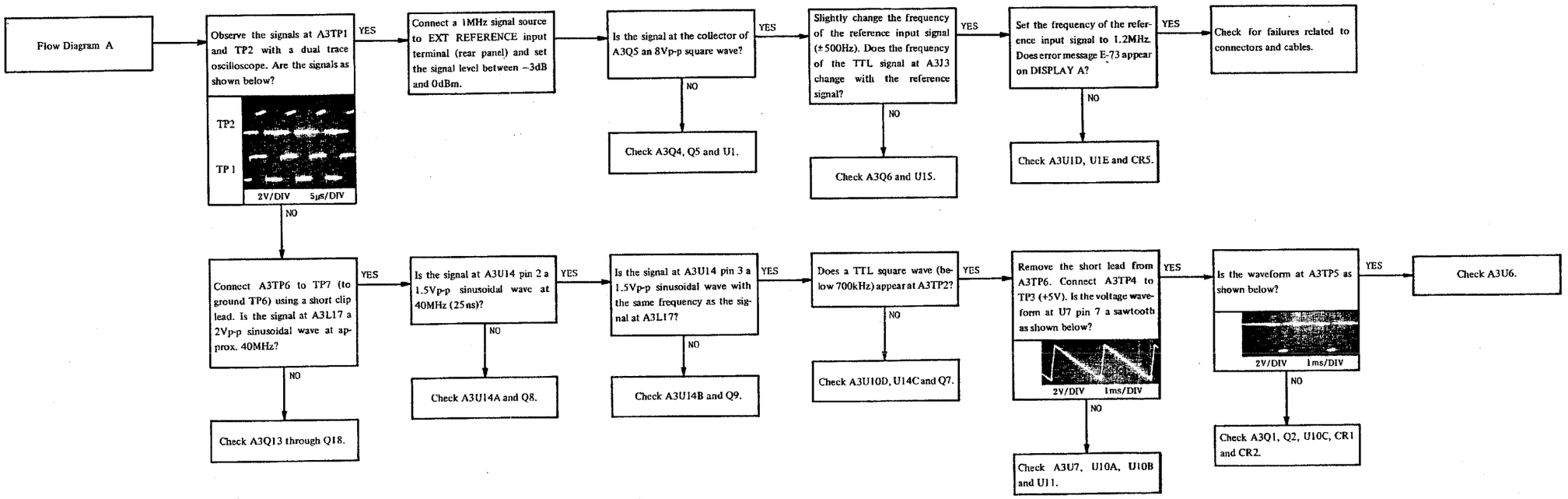


Figure 8-57. A3 Reference Frequency Generator Board Troubleshooting Flow Diagram — 2 of 2.

A3 BOARD FUNCTIONAL TEST

1. 100kHz Reference Signal Test

   1) Observe the 100kHz reference signal at A3J8 with an oscilloscope.

   2) The trace on the CRT should be as shown below :

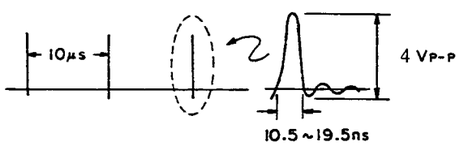


2. Search Control Circuit Operating Test

   1) Connect a short clip lead between A3TP4 and TP3 (+5V).

   2) Connect the probe of an oscilloscope to A3TP6.

   3) The trace on the CRT should be as shown below :

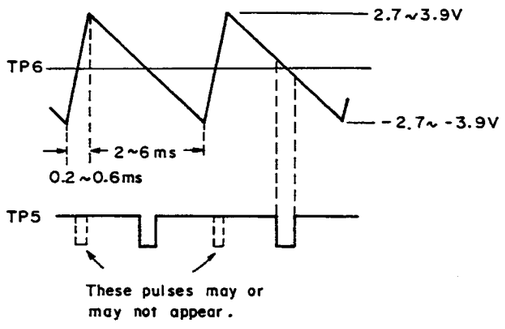




8-137. A3 REFERENCE FREQUENCY GENERATOR

8-138. Figure 8-58 is the block diagram of the A3 Reference Frequency Generator. The output signal of the 40MHz Crystal Oscillator (VCXO) is the source of the IF signal, the phase detector drive signal, the 100kHz reference signal for the A4 Fractional N circuit and the clock signal for the Digital Control section. The U13 Flip Flops divide down the 40MHz to supply a 20MHz clock signal to the digital control section and a 10MHz signal to both the 100kHz Counter (U9 and U8) and the IF Counter (U5 and U3). The U9 and U8 decade counters produce the 100kHz reference frequency for the Fractional N PLL from the 10MHz output of the U13 Flip Flops. The U12 Flip Flops following the 100kHz Counter synchronize the 100kHz signal with the 40MHz source signal to reduce phase noise due to the slight fluctuation in the counter operating speed. The Q3 differentiator circuit converts the waveform of the 100kHz reference signal to a short pulse appropriate for input to the phase detector of the Fractional N Loop. The U5 and U3 IF Counter divides down the 10MHz output of the U13 Flip Flops to a 78.125kHz IF or a 69.444kHz IF. When the IF signal is 78.125kHz, the IFCH (IF change) control line is LOW and the U5 counter outputs 1.25MHz by dividing the 10MHz by a factor of 8. The U3 counter then divides down the 1.25MHz by a factor of 16. When the IF signal is 69.444kHz, the IFCH line is HIGH to set the U5 counter to ÷9 mode. The U3 counter then divides the 1.111MHz output of the U5 by a factor of 16.

The VCO (Q13 through Q18), the U14 Mixer, the U6 Phase Comparator and the U7 Loop Filter comprise the frequency summing PLL which produces the 40M-IF frequency required to convert the frequency of the vector measurement signals into IF. The frequency summing loop synthesizes the 40M-IF as follows :

The U14C NOR gate mixes the 40MHz and the VCO signals to develop 40MHz $\pm f_{VCO}$ sidebands. U14A and U14B act as analog buffers to equalize the levels of the inputs for the Mixer. The 700kHz Low Pass Filter following the Mixer selectively passes the 40M-$f_{VCO}$ sideband to be input to the U6 Phase Comparator, blocking the 40M, $f_{VCO}$, and 40M+$f_{VCO}$ components of the mixer

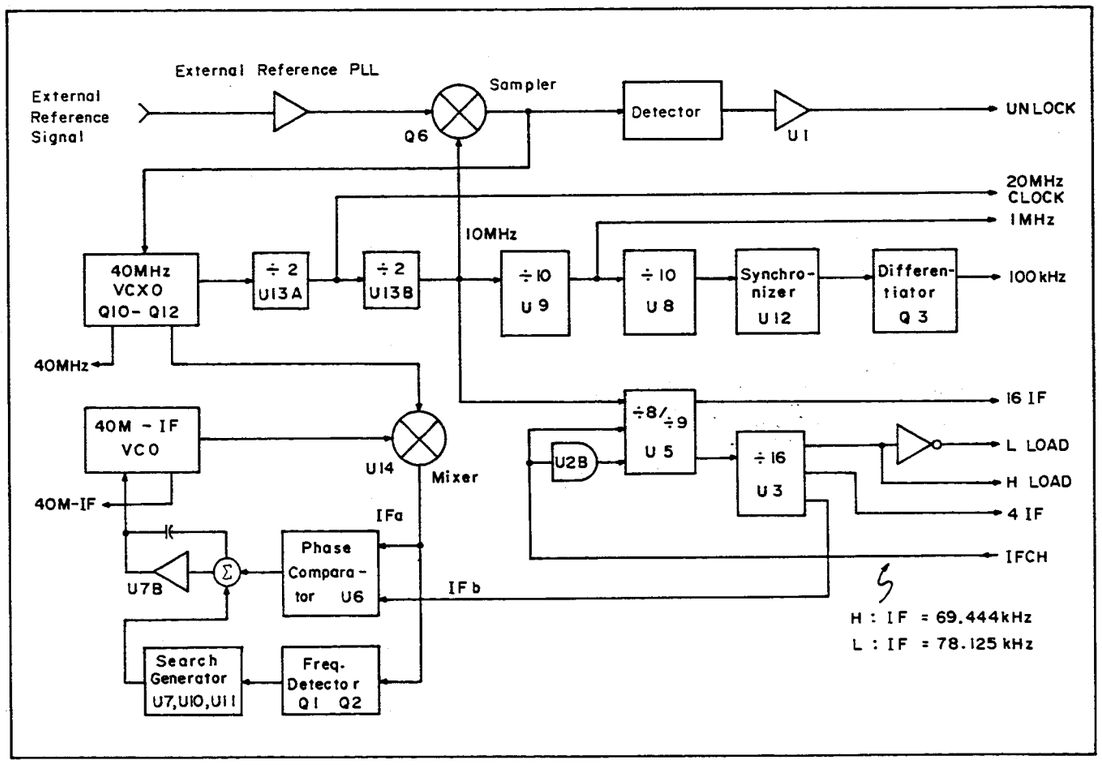


Figure 8-58. A3 Reference Frequency Generator Block Diagram.

output. The U6 Phase Comparator compares the frequency of the 40M-$f_{VCO}$ signal with the 78.125kHz or 69.444kHz from the IF Counter and outputs a pulse train whose pulse width is identical to the time difference between the negative going edges of the two inputs. When the 40M-$f_{VCO}$ signal goes LOW before the IF signal, the U output of the phase detector goes LOW until the IF counter signal goes LOW. Conversely, when the IF counter signal goes LOW before the 40M-$f_{VCO}$ signal, the D output of the phase detector goes LOW until the 40M-$f_{VCO}$ signal goes LOW. When both inputs go LOW simultaneously, the U and D outputs stay HIGH. WIth the U output of the Phase Detector, the U7B Loop Filter yields a negative dc voltage and increases the VCO frequency by decreasing the tuning capacitance of the CR10 varactor. Similarly, the D output yields a positive filter output voltage which causes the VCO frequency to decrease. Consequently, the VCO is settled at the frequency where the phase detector output is constant; that is, the inputs of the phase detector have the same frequency represented as:

$$40M\text{-}f_{VCO} = IF$$

Thus, the VCO frequency is locked to 40M-IF.

When the IF signal is shifted up from 69.444kHz to 78.125kHz, the VCO frequency must be decreased to provide the correct 40M-IF signal. The Search Generator speeds recovery of the normal VCO frequency as follows :

If the VCO goes to a higher frequency outside the capture range of the PLL control just after the IF is changed, the low-pass filter consisting of R18 and C13 decreases the input level of the Frequency Detector (CR1, CR2 and Q1). The input of U10C goes LOW, triggering the U11 Search Control Flip Flop by pulling up the potential at TP4 to HIGH. The Search Generator (U7, U10A and U10B) starts charging the U7B Loop Filter with the output current of U7C. Thereby, the Loop Filter develops a negative going ramp which serves as the VCO control voltage. The VCO is swept to a higher frequency by the ramp voltage across the varactor. When the ramp voltage reaches the negative threshold level (-4.7V) of the U7A level comparator, U7A disables U7C and causes the U7D current source to output a reverse polarity charge current. The Loop Filter is charged fast, developing a positive going ramp. When the ramp voltage reaches the positive threshold level (+4.7V), the level comparator again switches the charge current source to U7C. At this time, the VCO is at the lowest frequency in the sweep frequency range. The dc output voltage of the Frequency Detector increases and U10C resets the Search Control Flip Flop. The Search Generator, therefore, stops the ramp output. Then, the phase detector output finally causes the VCO frequency to approach 40M-IF. The U11A gate circuit is disabled to reset the Search Control Flip Flop during the period of the positive going ramp (the VCO frequency is swept to a lower frequency). Accordingly, the search control always causes the VCO to approach the capture range of the PLL from a lower frequency. When the IF signal changes from 78.125kHz to 69.444kHz, the PLL control recovers the normal VCO frequency without the help of the Search Generator.

The 40MHz Crystal Oscillator can be tuned to the frequency of the external reference signal, as controlled by the External Reference PLL circuit. The Q6 Sampler of the External Reference PLL synchronously chops the reference input signal with the 10MHz frequency counted down from the 40MHz crystal. When the internal 10MHz frequency is exactly equal to or ten times the external reference frequency (10MHz or 1MHz), the filtered output of the Sampler is a stable dc voltage. Otherwise, the Sampler yields a beat coincident with the frequency difference between the two signals. The beat output from the U15 low-pass filter varies the tuning capacitance of the CR9 varactor until the oscillation frequency is settled to the external reference. When the external reference frequency is outside the narrow tunable frequency range of the Crystal Oscillator, the U1E and U1D peak detector rectifies the beat output from the Sampler and causes the UNLOCK line to go HIGH to signal the microprocessor.

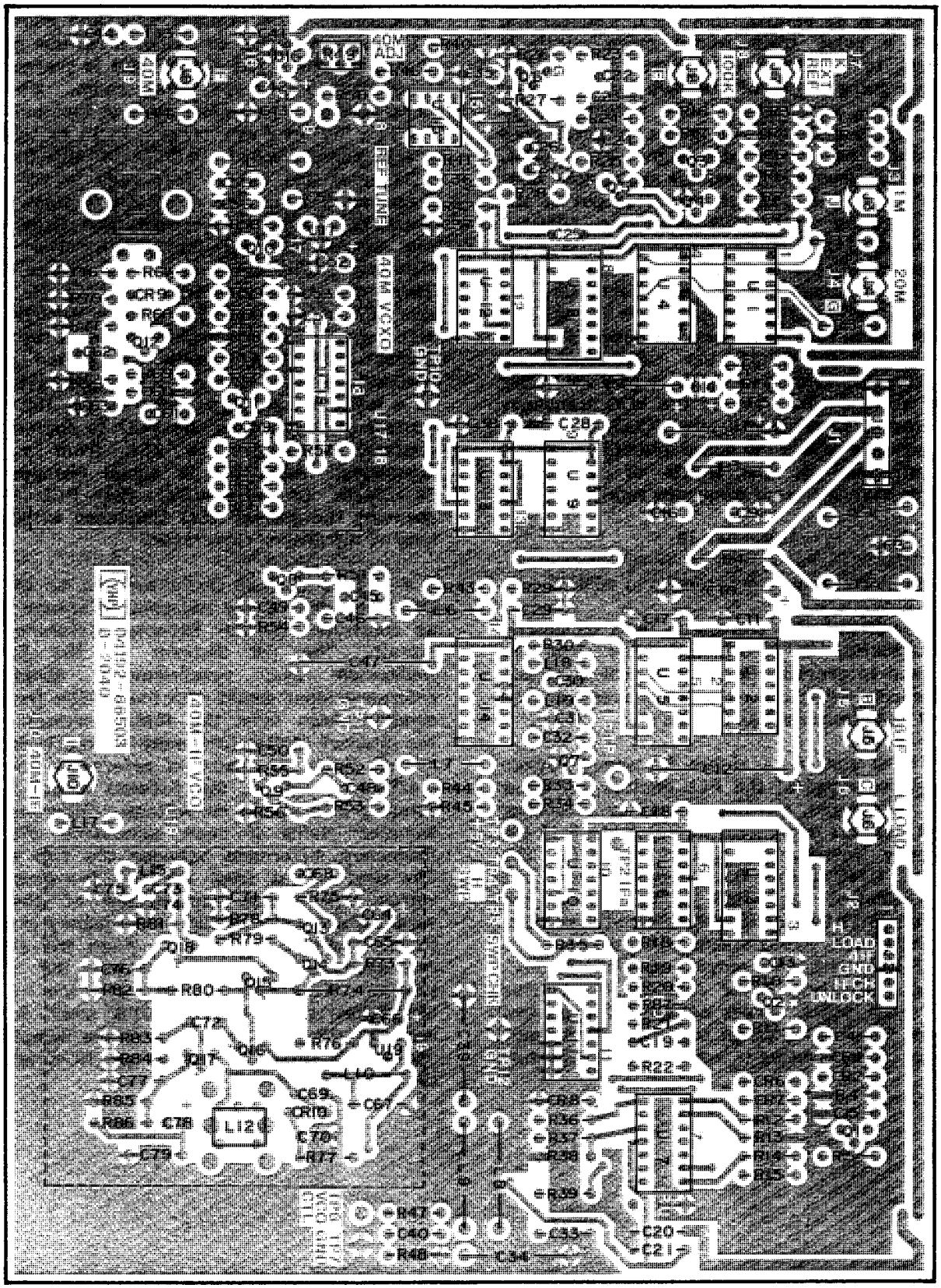

Figure 8-59. A3 Reference Frequency Generator Board Assembly Component Locations.

## A3 REFERENCE FREQUENCY GENERATOR (P/N 04192-66503)

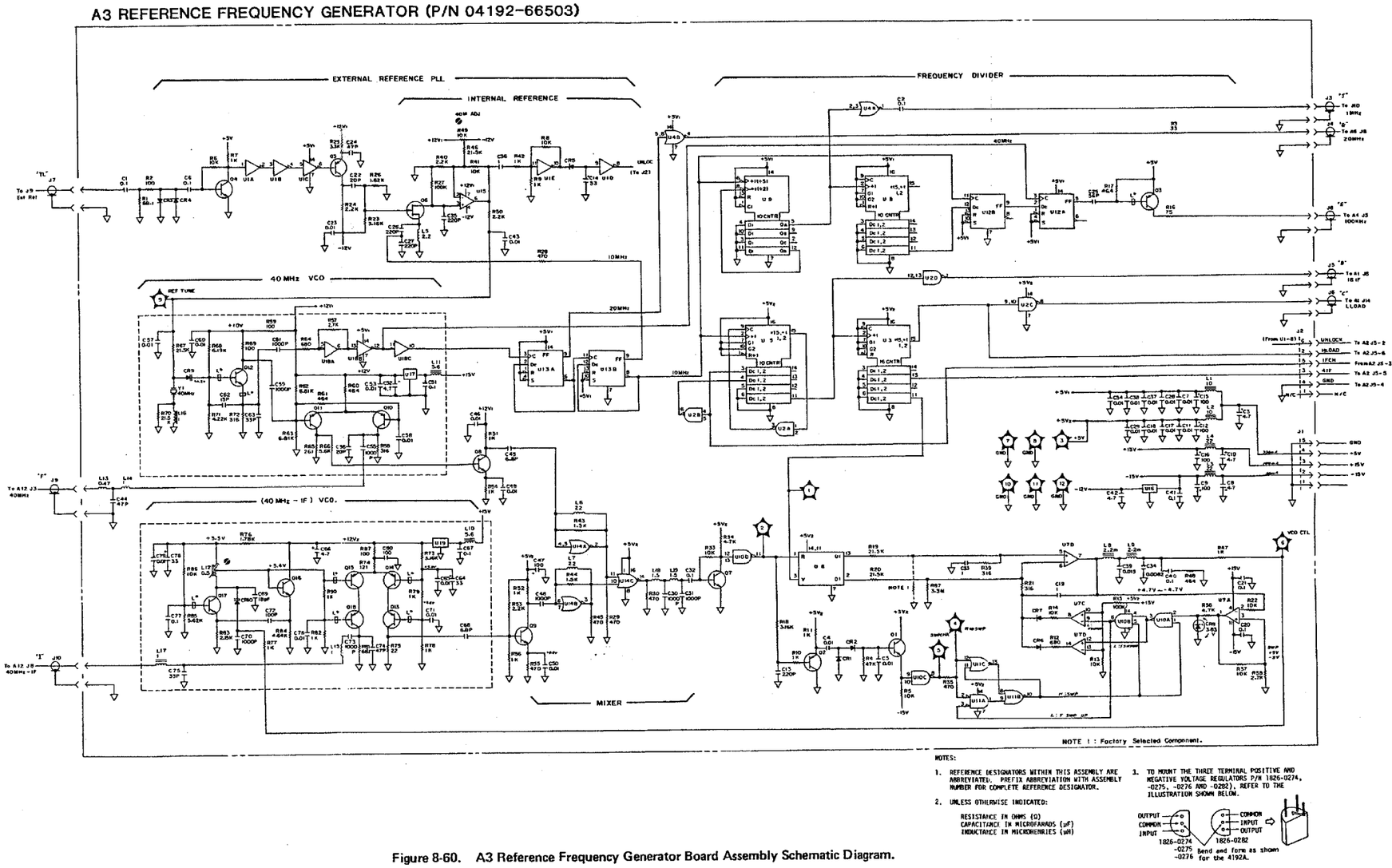


NOTES:

1. REFERENCE DESIGNATORS WITHIN THIS ASSEMBLY ARE ABBREVIATED. PREFIX ABBREVIATION WITH ASSEMBLY NUMBER FOR COMPLETE REFERENCE DESIGNATOR.
2. UNLESS OTHERWISE INDICATED:

   RESISTANCE IN OHMS (Ω)
   CAPACITANCE IN MICROFARADS (μF)
   INDUCTANCE IN MICROHENRIES (μH)

3. TO MOUNT THE THREE TERMINAL POSITIVE AND NEGATIVE VOLTAGE REGULATORS P/N 1826-0274, -0275, -0276 AND -0282), REFER TO THE ILLUSTRATION SHOWN BELOW.




Figure 8-60. A3 Reference Frequency Generator Board Assembly Schematic Diagram.

START

1. Disconnect the VCO OUTPUT – EXT VCO connection cable on the rear panel.
2. Connect the input of a frequency counter to the VCO OUTPUT terminal.

Set the SPOT FREQ in accordance with the table below. Does the display output of the counter meet the frequency test limits given in the table?

| SPOT FREQ | Test limits |
|---|---|
| 13 MHz | 53MHz±3kHz |
| 100 kHz | 40.1MHz±2kHz |

NO

YES

Set the SPOT FREQ to 33.3333 kHz. Is the frequency display (40.0333 MHz ± 2 kHz) on the counter stable?

NO → Go to Flow Diagram C.

YES → Go to Flow Diagram D.

Is the display readout of the counter correct when the SPOT FREQ is 13 MHz?

NO

YES → Go to Flow Diagram B.

1. Disconnect A4W1.
2. Connect the positive lead of a dc power supply to A4L2 and the negative lead to chassis.
3. Set the output voltage of the dc power supply to 0.75V.

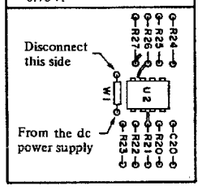


*Note:
*To enable the error in message to be displayed, turn the instrument off and back on after setting the dc power supply voltage.*

Is the frequency display on the counter 54 MHz ± 1 MHz?

NO → Is a 4Vp-p RF signal present at the VCO OUTPUT?

NO → Is the signal at A4 U1 pin 3 a 1Vp-p sinusoidal wave (at 53 MHz)?

NO → Does a 0.2Vp-p RF oscillation signal appear at the Source of A4Q2?

NO → Check A4Q1, Q2, Q3, CR2 and CR3.

YES → Check A4U1.

YES → Check A4U1.

YES

Set the output of the dc power supply to 8V. Is the frequency readout on the counter lower than 40 MHz?

NO → Check A4CR2, CR3, CR1 and Q1.

YES

Does E-71 or E-70 appear on the front-panel display when the dc power supply voltage is 0.75V or 8V, respectively? *See Note.

NO → Is a 0.5Vp-p RF signal present at the Collector of A4 Q39?

NO → Is a 0.5Vp-p RF signal present at A4U1 pin 15?

NO → Check A4U1.

YES → Go to Flow Diagram A.

YES → Check A4Q39 and Q40.

YES → Check A4U2.

**Figure 8-61. A4 Fractional N Loop Board Troubleshooting Flow Diagram (1 of 4).**

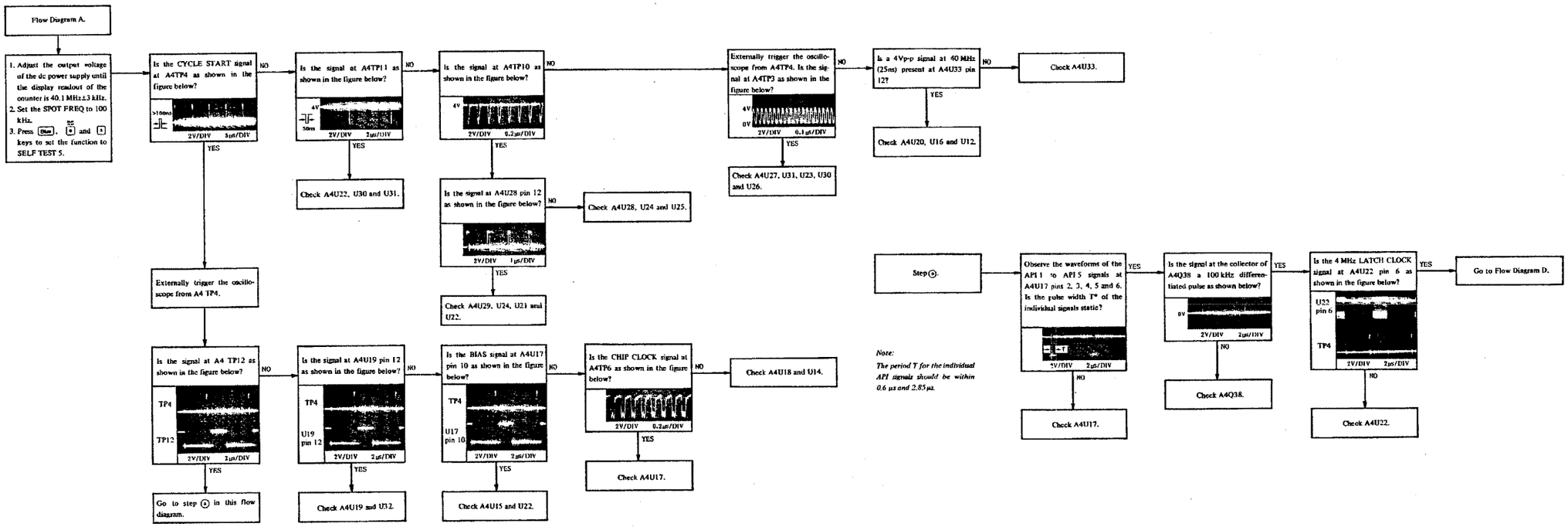


Figure 8-62. A4 Fractional N Loop Board Troubleshooting Flow Diagram (2 of 4).

Flow Diagram B.

1. Disconnect A4W1.
2. Connect the positive lead of a dc power supply to A4L2 and the negative lead to chassis. See Figure A.
3. Adjust the output voltage of the dc power supply until the display readout of the counter is 40.1 MHz ±3kHz.
4. Set the SPOT FREQ to 100 kHz.

*Note:*
*If the frequency display on the counter cannot be set to 40.1 MHz with a dc power supply voltage between 0V and 1V, check A4CR2 and CR3.*

Externally trigger the oscilloscope from A4 TP4. Does the LSD BIT 1 signal appear at A4U25 pin 5 as shown below?

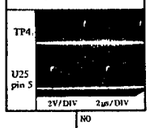


YES

NO

Check A4U25, U24 and U17.

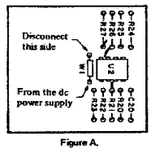


Figure A.

Does the pulse signal at A4TP3 disappear for one cycle period on the timing given by the signal at TP4?

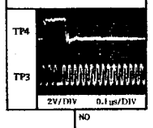


YES

NO

Does a pulse signal appear at A4U12 pin 1 as shown in the figure below?

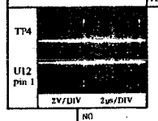


YES

NO

Is A4U19 pin 5 LOW?

YES

NO

Check A4U15.

Check A4U19.

Observe waveforms of the API 1 to API 5 signals at A4U17 pins 2, 3, 4 and 6. Is the pulse width T* of the individual signals static?

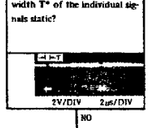


YES

NO

Check A4U17.

Is the signal at A4U16 pin 9 as shown in the figure below?

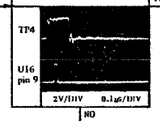


YES

NO

Is the signal at A4U12 pin 9 as shown in the figure below?

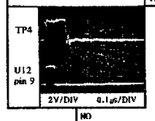


YES

NO

Check A4U20.

Check A4U16.

Check A4U12.

Go to Flow Diagram D

*The pulse width T should be within 0.6 µs and 2.85 µs.

Flow Diagram C.

Is the API-1 signal at A4U10 pin 9 as shown in Figure B?

YES

NO

Are the API-2 to API-5 signals at A4U7 pins 15, 12, 10, and 7 as shown in Figure B?

YES

NO

Are the API-2 to API-5 signals at A4U7 pins 14, 13, 11 and 6 similar to Figure B?

YES

NO

Check A4U7.

Check A4U17.

Is the API-1 signal at A4U10 pin 12 as shown in Figure B?

YES

NO

Check A4U10.

Check A4U17.

Externally trigger the oscilloscope from A4 TP4.




The pulse width T varies between 0.5µs and 2.75µs. To facilitate observing this, set the SPOT FREQ to 100.0001 kHz. (Multi-exposure was used to obtain the signal shown in the photo.)

Figure B

Does the PULSE SWALLOW signal appear at A4TP2 as shown in the figure below?

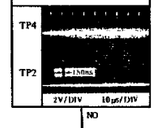


YES

NO

Check A4U17.

Go to Flow Diagram D.

Figure 8-63. A4 Fractional N Loop Board Troubleshooting Flow Diagram (3 of 4).

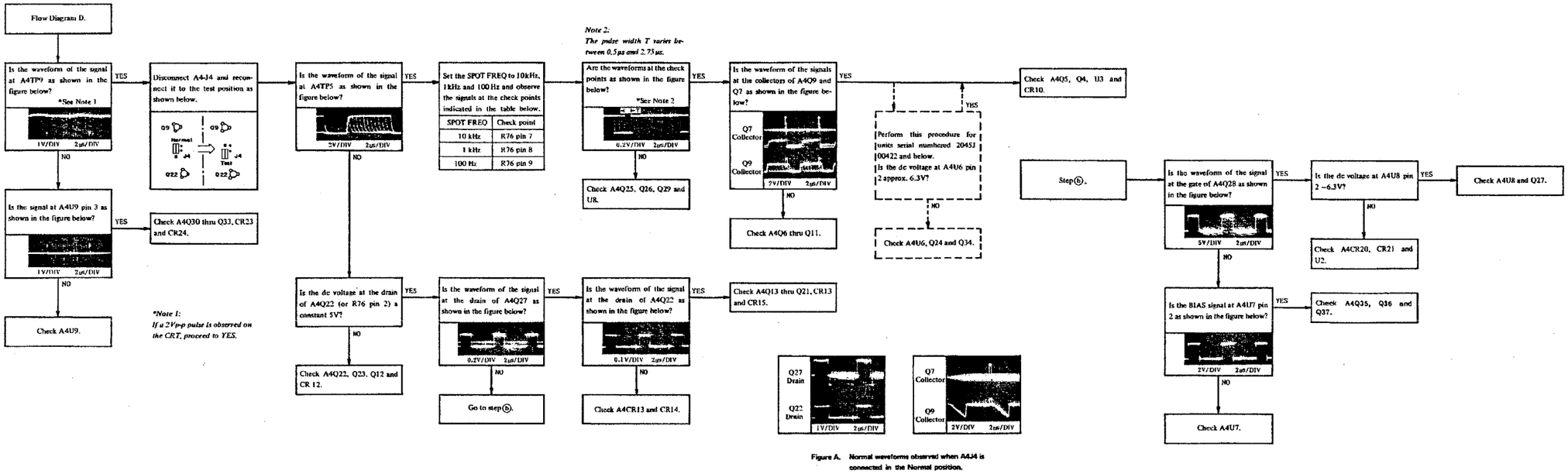


Figure A. Normal waveforms observed when A4J4 is connected in the Normal position.

Figure 8-64. A4 Fractional N Loop Board Troubleshooting Flow Diagram (4 of 4).

## A4 BOARD FUNCTIONAL TEST

1. Integrator Circuit Operating Test

   1) Connect the probe of an oscilloscope to A4TP5.

   2) Set the SPOT FREQ to 13MHz. The trace on the CRT should be as shown below :

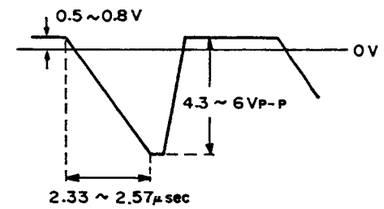


   3) Connect the probe of the oscilloscope to the source of A4Q28.

   4) Set the SPOT FREQ to 5Hz. The trace on the CRT should be as shown below :

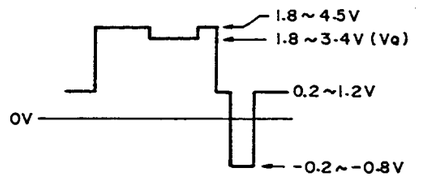


   When $V_Q$ is not between 1.8V and 3.4V, the circuit is operating normally if the signal at A4TP9 is as shown below :

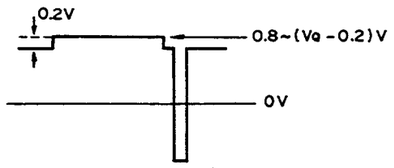


2. Error Detection Function Test

   1) Disconnect the SMB connector from A4J5.

   2) "E-70" should be displayed on DISPLAY A.

   3) Reconnect the SMB connector to A4J5 and disconnect the connector from A4J6.

   4) "E-71" should be displayed on DISPLAY A.

   5) Reconnect the SMB connector to A4J6.



### 8-139. A4 FRACTIONAL N LOOP (ANALOG)

### 8-140. Phase Comparator, Loop Filter, API Current Source and VCO circuits

8-141. Figure 8-65 is the block diagram of the Fractional N Loop circuit. The Q1, Q2 and Q3 VCO generates 40.000005MHz to 53MHz signal in response to the tuning control of the tank circuit (CR2, CR3, C4 and L3). With the VCO control voltage between 0V and 8V, the paralleled CR2 and CR3 varactors continuously cover the required oscillation frequency range. To prevent spurious FM sidebands from appearing in the VCO output, the trap filter (L1, L2 and C3) blocks the residual 100kHz frequency component in the tuning control input voltage from the Phase Comparator. The oscillator signal is fed back from the Q2 source follower to maintain high Q of the tuning circuit. When the VCO control voltage is not between 0V and 9V, the U2 window comparator forces the VCOH or VCOL line to go HIGH to signal the abnormality in the Fractional N Loop (to the digital control section). The dual buffer amplifiers following the VCO wave-shape the VCO output to the TTL square wave.

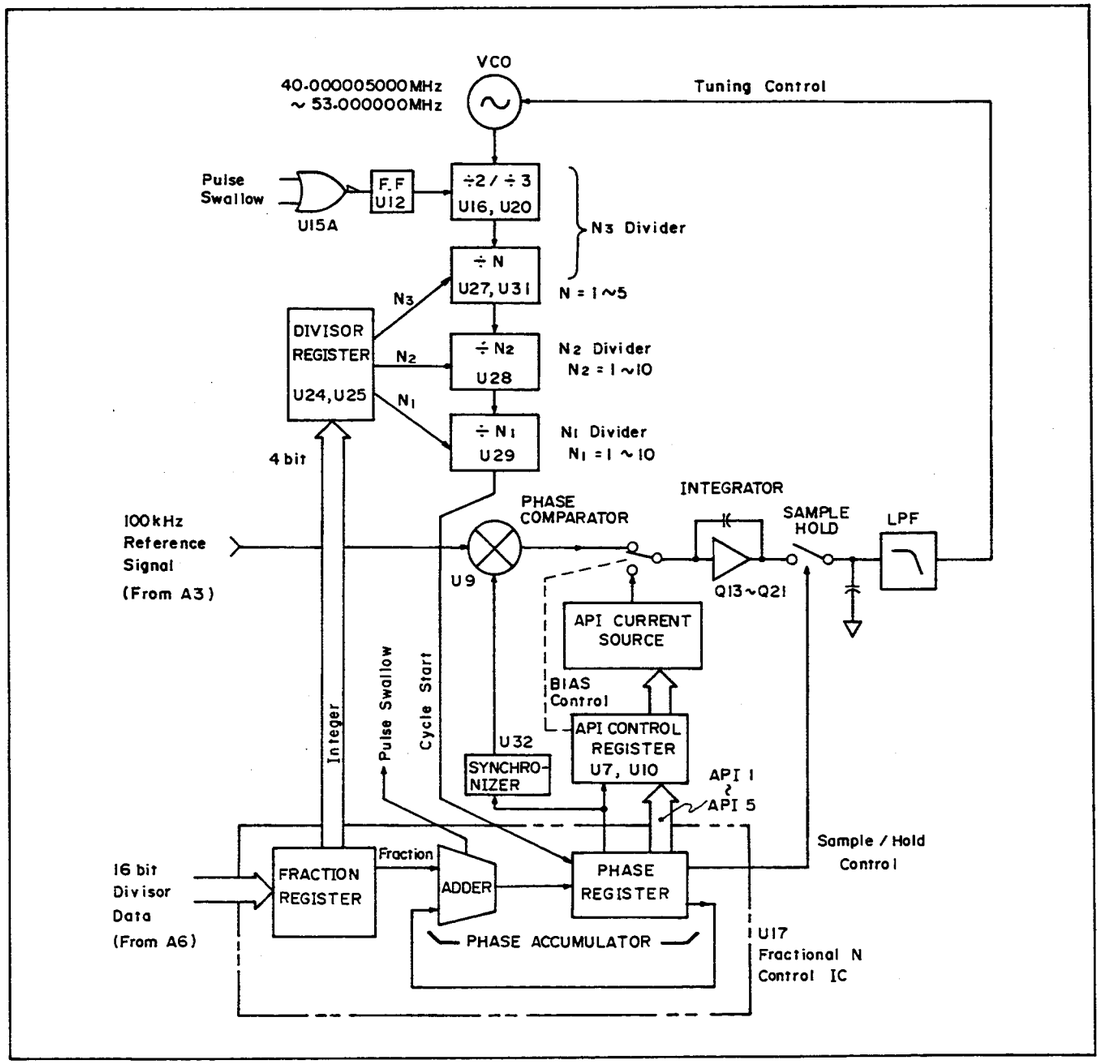


Figure 8-65. A4 Fractional N Loop Block Diagram.

The U9 Phase Comparator Flip Flops are triggered by the leading edges of the output pulse from the Fractional Down Counter and of the 100kHz reference signal to compare their periods. The phase comparator output is a pulse train whose duty cycle (pulse width) is proportional to the time difference between the alternate triggering by these two inputs. When output of the fractional down counter shifts from the 100kHz reference frequency, the pulse width of the phase comparator output continuously varies because of the difference between the periods of the comparison inputs. The buffer amplifier (Q30 through Q33) following the Phase Comparator converts the level of the ECL phase comparator output to the -1V peak pulse required to accomplish the API operating cycles in conjunction with the API current source.

The Q13 through Q21 integrator amplifier and the C36 integration capacitor in the feedback loop comprise the Loop Filter of the Fractional N PLL. To perform the integration for the API in 10μs (100kHz) periods (extremely shorter than ordinary dual-slope integrators), the integrator amplifier has a fast frequency response, yet a high open loop gain (70 to 80dB) for good linearity. The Loop Filter is negatively charged with the API current and then discharged with the phase detector output for each operating cycle. The diode input switches (CR13, CR14, CR15 and CR17) alternately select the charge input from the API Current Source and the discharge input from the Phase Detector.

The API Current Source is a D-A converter consisting of the $I_{API}$ current supply (U8), the $I_{bias}$ current supply (Q24, Q34 and U6), the current switches (Q25, Q26 and Q29), the summing amplifier (Q12, Q22 and Q23), the current dividing resistor networks (R76, R77, and R79 through R87) and the API data latch (U7 and U10). A simplified circuit schematic for the API current source is shown in Figure 8-66. The U7 and U10 latches momentarily store the API 1 to API 5 phase register data (of the phase accumulator) and the BIAS control signal, both of which are transferred from the Fractional N Control IC (U17). These latches are always active to write out data immediately after changes in the input data. The storage and

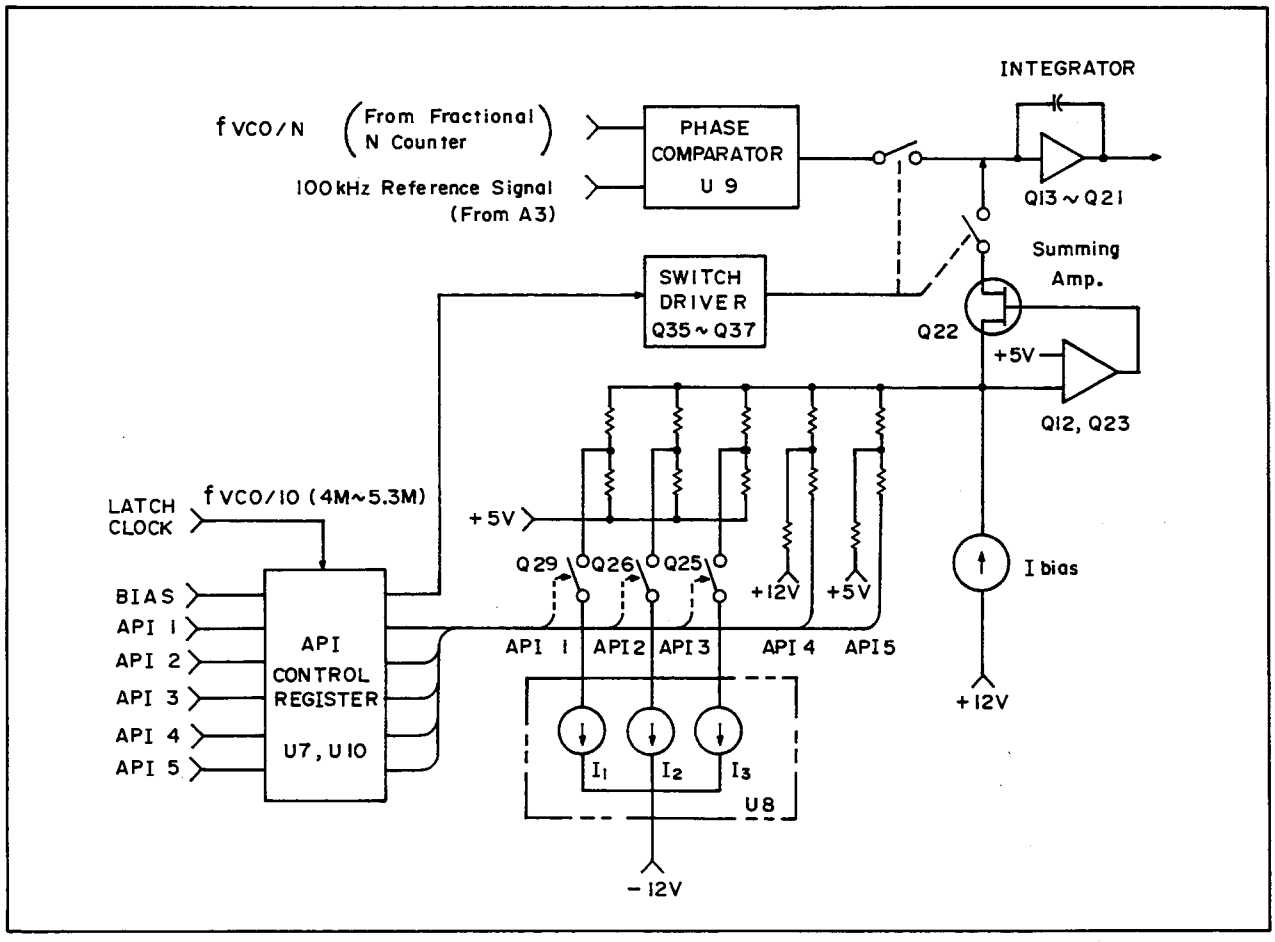


Figure 8-66. API Current Source Simplified Schematic.

output of data are synchronously made with the latch clock signal which varies from 4MHz to 5.3MHz with the VCO frequency (1/10 $f_{VCO}$). The API 1 to API 5 signals provide the magnitude of the API current developed by the API Current Source as follows :

The API current is the sum of the branch currents ($I_{API\,1}$ to $I_{API\,5}$) which flow through the individual resistor channels of the current divider network. Individual branch currents have the magnitudes set in decade ratios relating to each digit (API 1 to API 5) of the phase register output data. The resistor elements which determine these currents are shown in the table below :

| Current | Resistor | Current Ratio |
|---|---|---|
| $I_{API1}$ | R77, R79, and 10kΩ of R76 | 100 |
| $I_{API2}$ | R80 and 50kΩ of R76 | 10 |
| $I_{API3}$ | 500kΩ of R76 | 1 |
| $I_{API4}$ | R81, R83, R86 and R87 | 1/10 |
| $I_{API5}$ | R82, R84 and R85 | 1/100 |

The magnitudes of the $I_{API}$ currents are adjusted for the given ratios in reference to the $I_{API\,3}$ current. The $I_{API\,5}$ current is not adjusted because small errors are permissible (do not affect the accuracy of API operation). The API 1 to API 5 signals control the time for the individual $I_{API}$ currents to flow to the respective resistor channels. When the API 3 signal, for example, goes LOW, the Q25 switch driver turns off. The CR18 diode (switch) is forward-biased by the U8 current source permitting the $I_{API\,3}$ current to flow through the 500kΩ resistor of R76.

The API 3 signal stays LOW for a period proportional to the third digit of the phase register output data. The other API signals also control the $I_{API}$ current in the same manner. The table below is an example to explain the periods of the API signals. This example shows the changes in the periods of the API 1 and API 2 signals when the fractional divisor is 0.01000; that is, when the stored number in the phase register increases in 0.01000 steps.

| Phase Resistor Output | Period of API1 | Period of API2 |
|---|---|---|
| 0.00000 | T (9) | T (9) |
| 0.01000 | T (9) | T (8) |
| 0.02000 | T (9) | T (7) |
| . . . | . . . | . . . |
| 0.09000 | T (9) | T (0) |
| 0.10000 | T (8) | T (9) |
| 0.11000 | T (8) | T (8) |
| . . . | . . . | . . . |
| 0.99000 | T (0) | T (0) |
| 0.00000 | T (9) | T (9) |

Here, the T numbers in parentheses represent the duration of the API signals proportional to the numbers. The API 4 and API 5 signals directly control the timing of the respective $I_{API}$ currents without using the switch drivers.

As described above, the $I_{API}$ currents proportional to the digits of the API 1 to API 5 phase register output data are given by the decade step current divider network, and the quantity of the current proportional to each digit number is controlled by changing the period of the current flow. These $I_{API}$ currents ($I_{API\,1}$ to $I_{API\,5}$) are summed to establish the requisite API current output. To accurately sum the currents without causing interference between the individual current channels, the Summing Amplifier maintains the potential at the current summing node, the source of Q22, constant at +5V. When an API operating cycle is initiated, the BIAS signal (HIGH) actuates the Bias Switch Driver (Q35, Q36, Q37 and Q28). Q28 turns on causing the CR15 and CR17 phase detector output switches to turn off. Simultaneously, CR14 goes off and stops passing the current from the I bias current source. The I bias current begins to flow through CR13, charging the integrator of the Loop Filter. After a short delay, the API 1 to API 5 signals cause the $I_{API}$ currents to flow during their respective time periods. The API current is subtracted from the I bias current and, thus, the

charge current is Ibias-$I_{API}$. When the charge period is terminated, the BIAS signal goes LOW. CR13 turns off to stop the charge input current. CR15 and CR17 turn on and allow the Loop Filter to be discharged with the phase detector output.

When the API operating cycle is completed, the Sample/Hold circuit retains the resultant output voltage of the Loop Filter on the timing given by the SAMPLE/HOLD command pulse from the Fractional N Control IC. The Q5 and Q4 sampling switches open for a short period to charge the storage capacitors (C25 and C24). To minimize the effects of stray capacitance between the drain and source of the FET sampling switch, the Sample/Hold circuit employs a two stage configuration. CR10, connected in parallel with the second sample/hold circuit stage, speeds charging of C24 for large changes in the sample/hold input voltage. To prevent the VCO frequency from being modulated by the leakage from the sample/hold drive pulse through the gate junction capacitance of Q4, the leak pulse is cancelled by the reverse polarity pulse applied through C23. The C30 and R63 local feedback loop compensates for the instability in the transient control of the VCO owing to the time lag between the response of the PLL and the sample/hold timing.

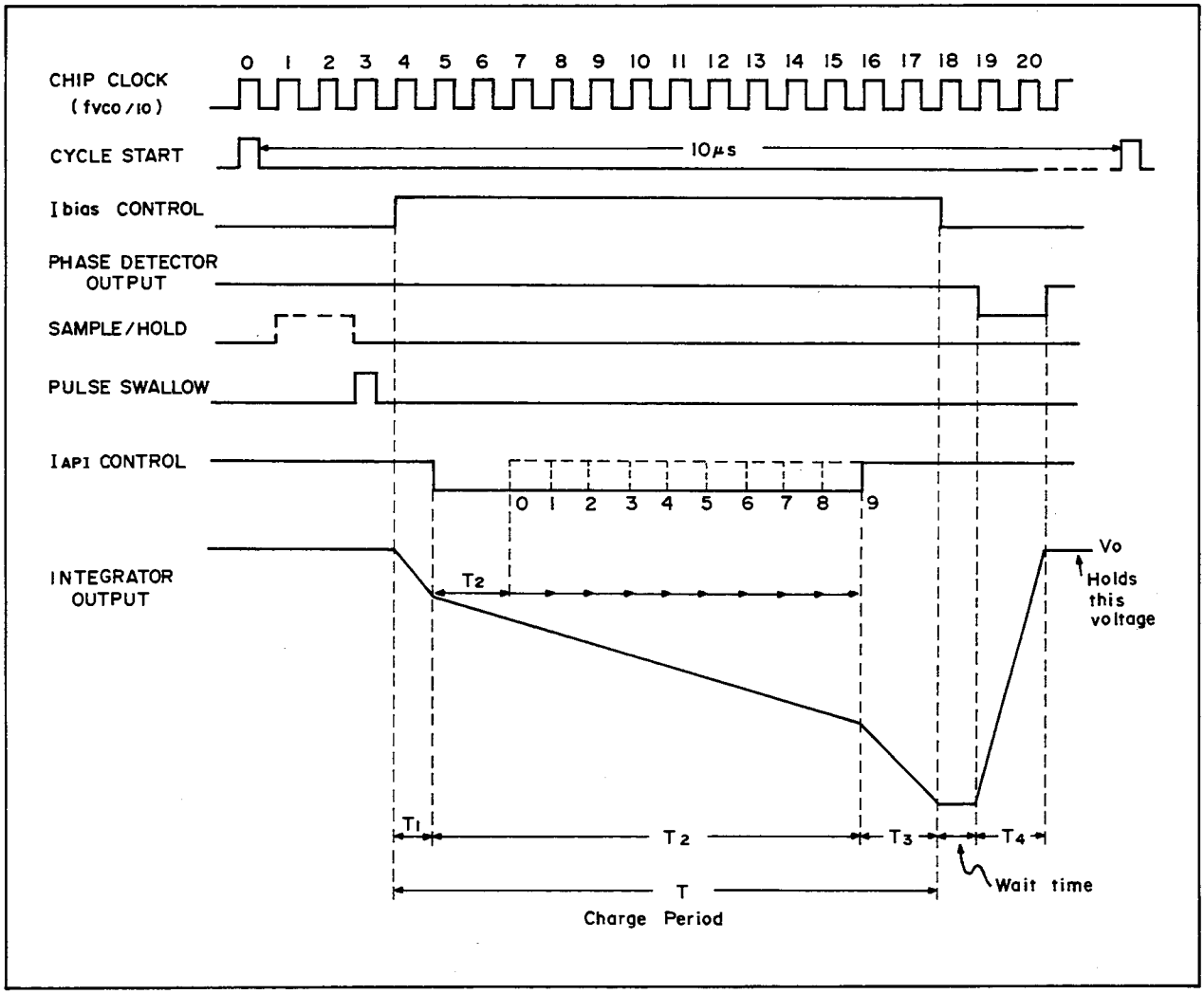


Figure 8-67. API Control Timing Diagram.

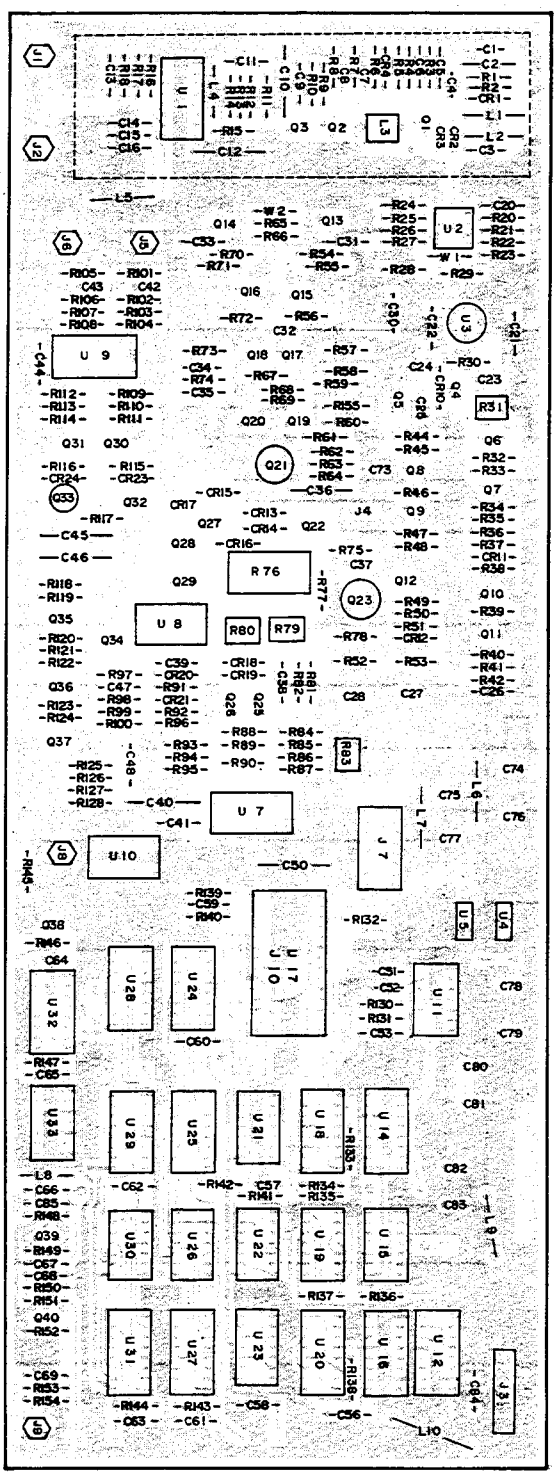

Figure 8-68. A4 Fractional N Loop Board Assembly Component Locations.

## A4 FRACTIONAL N LOOP (P/N 04192-66504) 1 OF 2

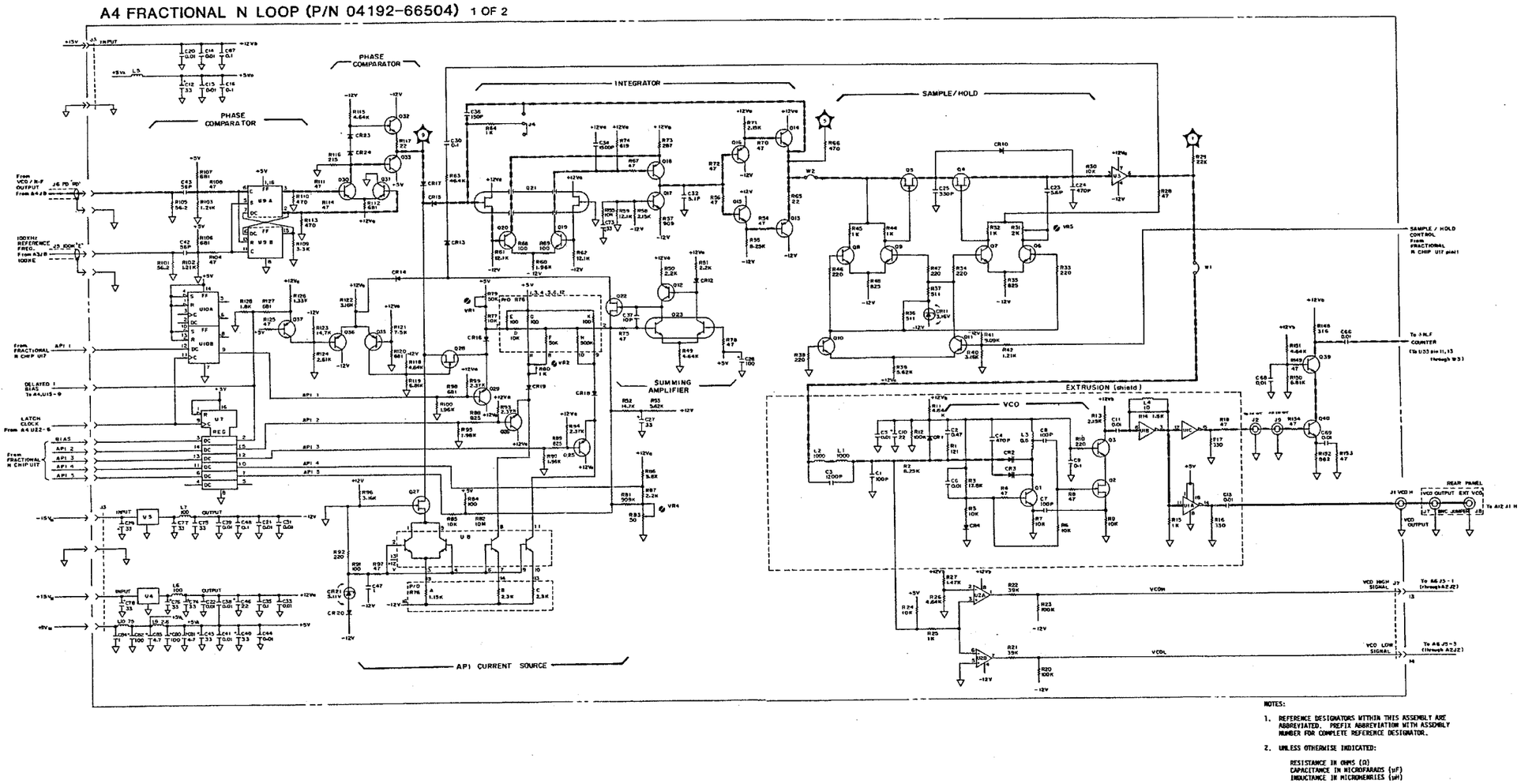


Figure 8-69. A4 Fractional N Loop Board Assembly Schematic Diagram (sheet 1 of 2).

8-142. A4 FRACTIONAL N LOOP (DIGITAL)

8-143. Fractional Down Counter and Fractional N Control Chip

8-144. The U17 Fractional N Control Chip contains the Phase Accumulator, adder, data comparator, decoder, driver, and several multiplexers which perform the calculations and the process timing control required for the pulse swallow operation and analog phase interpolation. The 16 digit fractional divisor data is transferred in the form of 4 bit parallel--data serial fashion and is stored in the internal register of U17 when the INV (Instruction Valid) signal is HIGH. U17 converts the integer part of the divisor into the nine's complement by subtracting the number from 999. This complement number is the divisor data actually required for the Fractional Down Counter to divide down the VCO frequency by the correct integer divisor. One digit of the 3-digit complement data is transferred to the U24 and U25 shift registers each time the ÷N CLOCK goes HIGH. The API control circuit in the Fractional N Control chip syncs with the CHIP CLOCK signal of 1/10 the VCO frequency and the CYCLE START signal, whose period is the same as that of the Fractional Down Counter output (10μs). The Phase Accumulator in the chip periodically accumulates the fractional part of the divisor data in synchronism with the CYCLE START signal. For the theory of the Phase Accumulator, refer to Paragraph 8-39. The contents of the phase register storing the accumulation result are decoded to the API control signals (API 1 to API 5) suited for the control input of the API Current Source. The Pulse Swallow command pulse is generated from the Phase Accumulator (in U17) each time the accumulated fractional divisor exceeds 1.

The VCO frequency is divided down in sequence by the÷2/÷3 counter (U16 and U20), and the programmable counters consisting of the following devices:

The LSD Counter (÷1 to ÷5): U27 and U31
The Second Digit Counter (÷1 to ÷10): U28
The MSD Counter (÷1 to ÷10): U29

The LSD counter divides the frequency of the VCO signal by the least significant digit of the integer part of the divisor in conjunction with the ÷2/÷3 counter. The Second Digit Counter and the MSD Counter perform their functions for the second digit and the most significant digit of the integer divisor, respectively. The bold lines in the schematic diagram indicate the signal flow between the down counters. The integer divisor data is stored in the U24 and U25 registers and repeatedly loaded to the program inputs of the respective counters in parallel fashion on the timing of the preload one-shot output pulse (10μs period).

The Pulse Swallow command from the U17 Fractional N Control Chip pulls down the input (TP2) of the U15A Gate. The U12 Pulse Remove Flip Flops are set to signal the receipt of the pulse swallow command to U16 of the ÷2/÷3 counter. To perform the pulse swallow operation, the ÷2/÷3 counter momentarily changes the counting manner for the input (VCO signal) as shown in Figure 8-70 Timing Diagram. In response to the pulse swallow command input, the output of the ÷2/÷3 counter is delayed for one cycle of the VCO signal. This yields the same delay in the final output of the Fractional Down Counter. The pulse swallow operation is also performed to divide the frequency of the VCO signal by an odd divisor. In such cases, the U19A Odd/Even Latch distinguishes the odd/even number of the divisor from the state of the least significant digit data in the U25 register and actuates the U15B and U15A pulse remove gates. The fractional down counter output signal for the Phase Comparator is taken from the BIAS control signal of the Fractional N Control Chip because the frequency of the BIAS signal is identical to the required counter output. The U19B and U32 Synchronization circuit reduces jitter in the counter output signal by synchronizing the source signal (BIAS signal) with the leading edges of the VCO signal. The Q38 differentiator converts the waveform of the counter output to a short pulse suitable for the Phase Comparator input.

The U18 and U14 Chip Clock/Cycle Start circuit produces a clock pulse (CHIP CLOCK) of 1/10 the VCO frequency used for timing synchronization in the Fractional N Control chip and, additionally, the trigger signal (CYCLE START) for the API operating cycles. The CYCLE START signal is generated in the same 10μs periods as the counter output. The U31B Preload Flip Flop periodically loads the divisor data to the LSD counter (in 10μs periods).

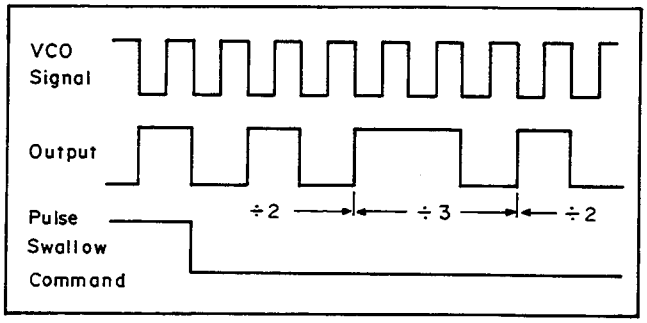


Figure 8-70. ÷2/÷3 Counter Timing Diagram.

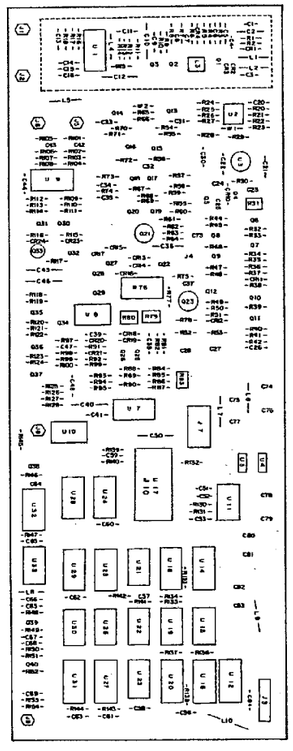

Figure 8-68. A4 Fractional N Loop Board Assembly Component Locations.

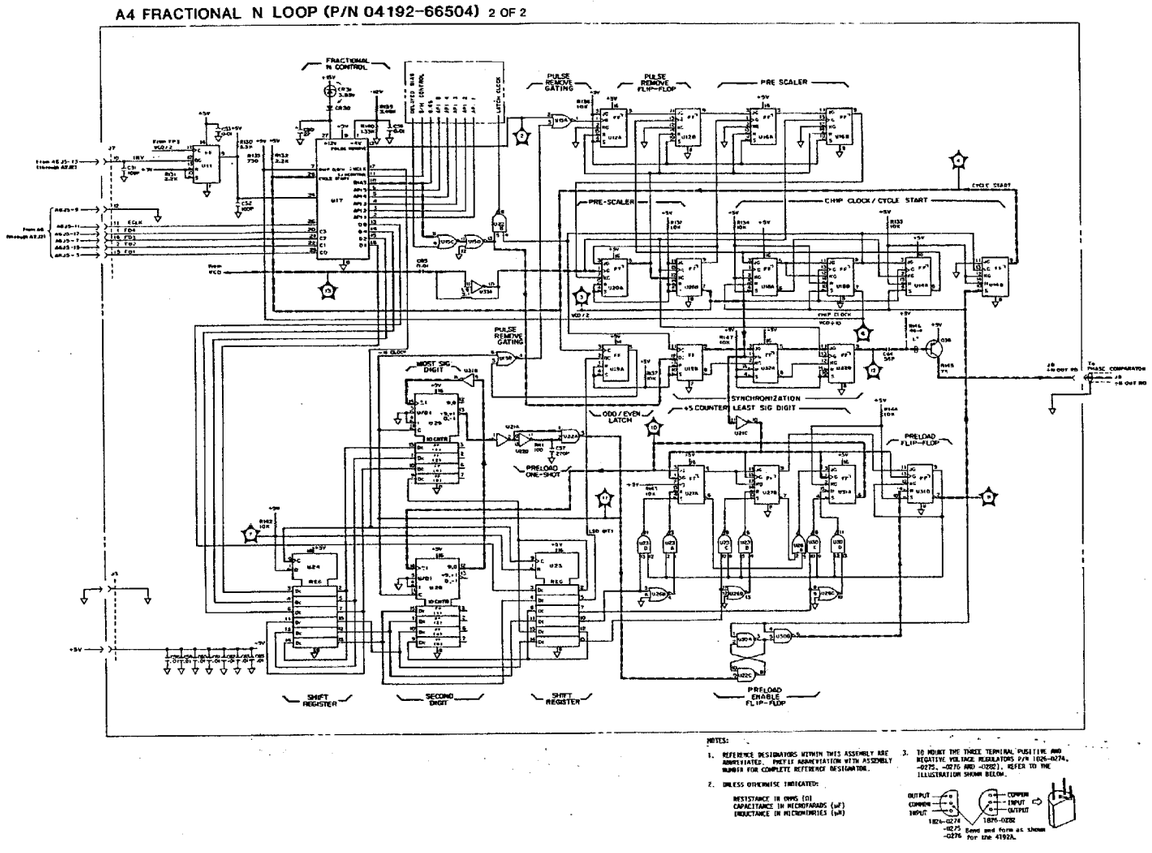


Figure 8-71. A4 Fractional N Loop Board Assembly Schematic Diagram (sheet 2 of 2).

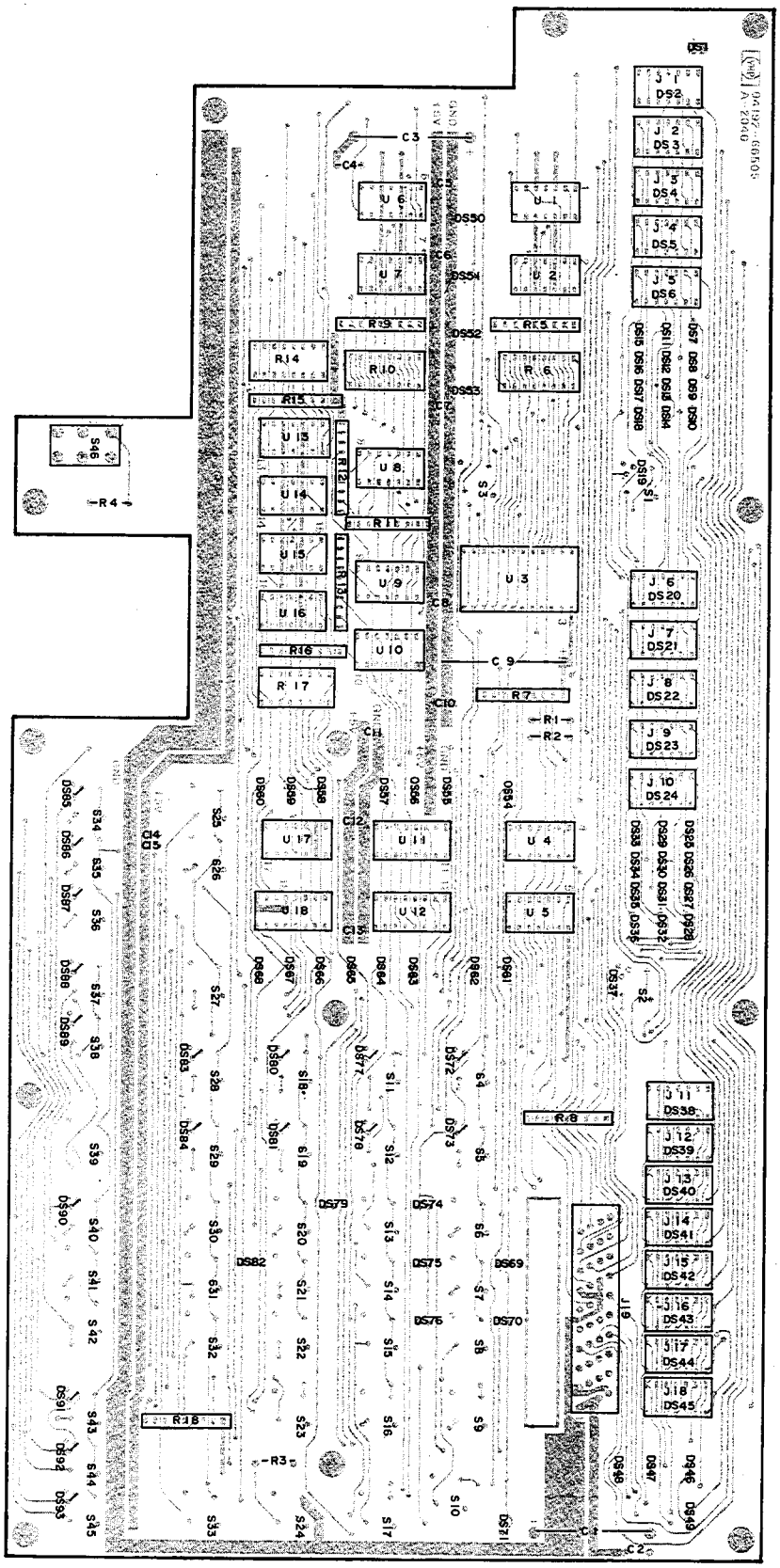

Figure 8-72. A5 Display and Keyboard Control Board Assembly Component Locations.

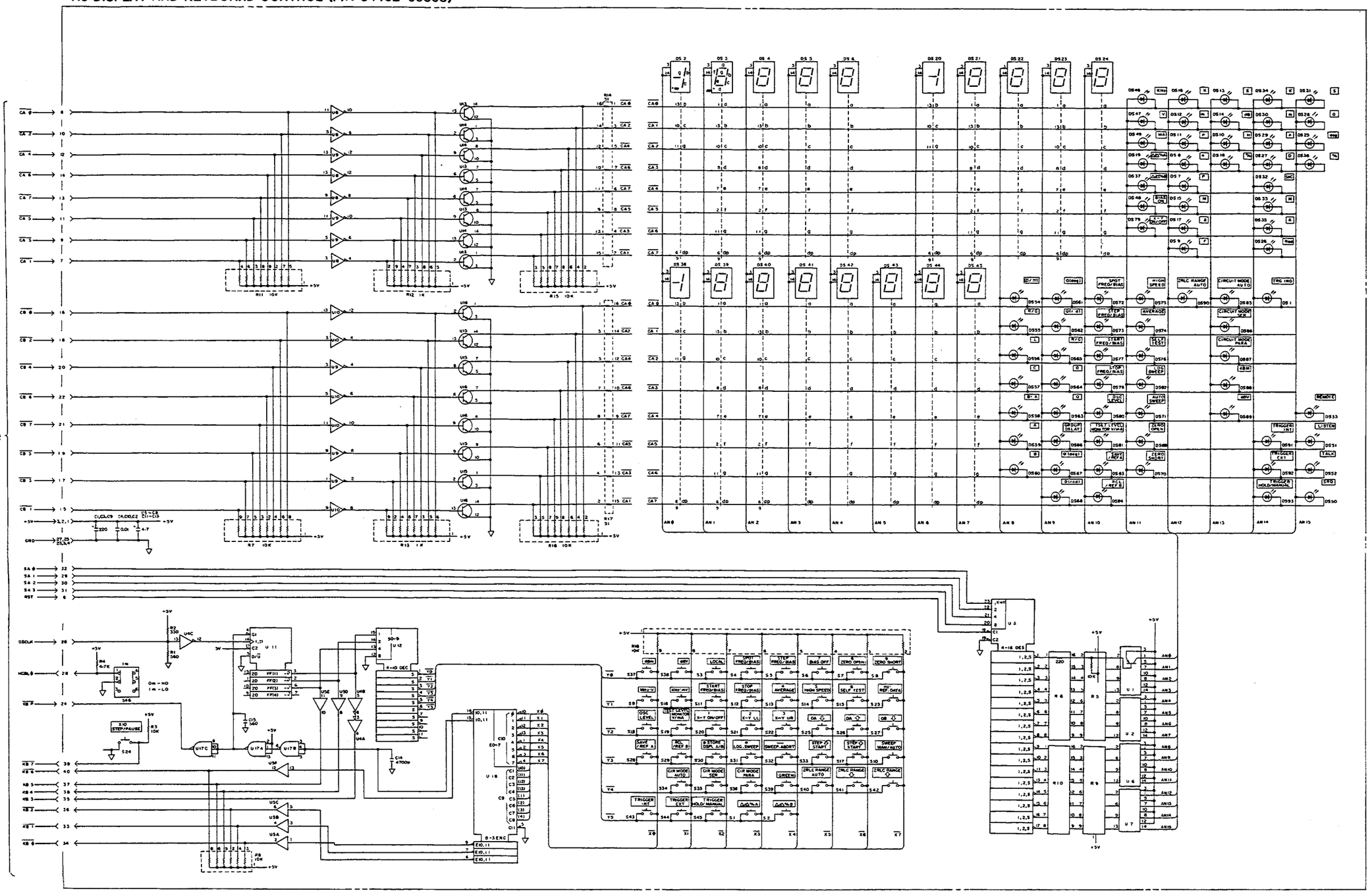

NOTES:

1. REFERENCE DESIGNATORS WITHIN THIS ASSEMBLY ARE ABBREVIATED. PREFIX ABBREVIATION WITH ASSEMBLY NUMBER FOR COMPLETE REFERENCE DESIGNATOR.

2. UNLESS OTHERWISE INDICATED:

   RESISTANCE IN OHMS (Ω)
   CAPACITANCE IN MICROFARADS (uF)
   INDUCTANCE IN MICROHENRIES (uH)

Figure 8-73. A5 Display and Keyboard Control Board Assembly Schematic Diagram.

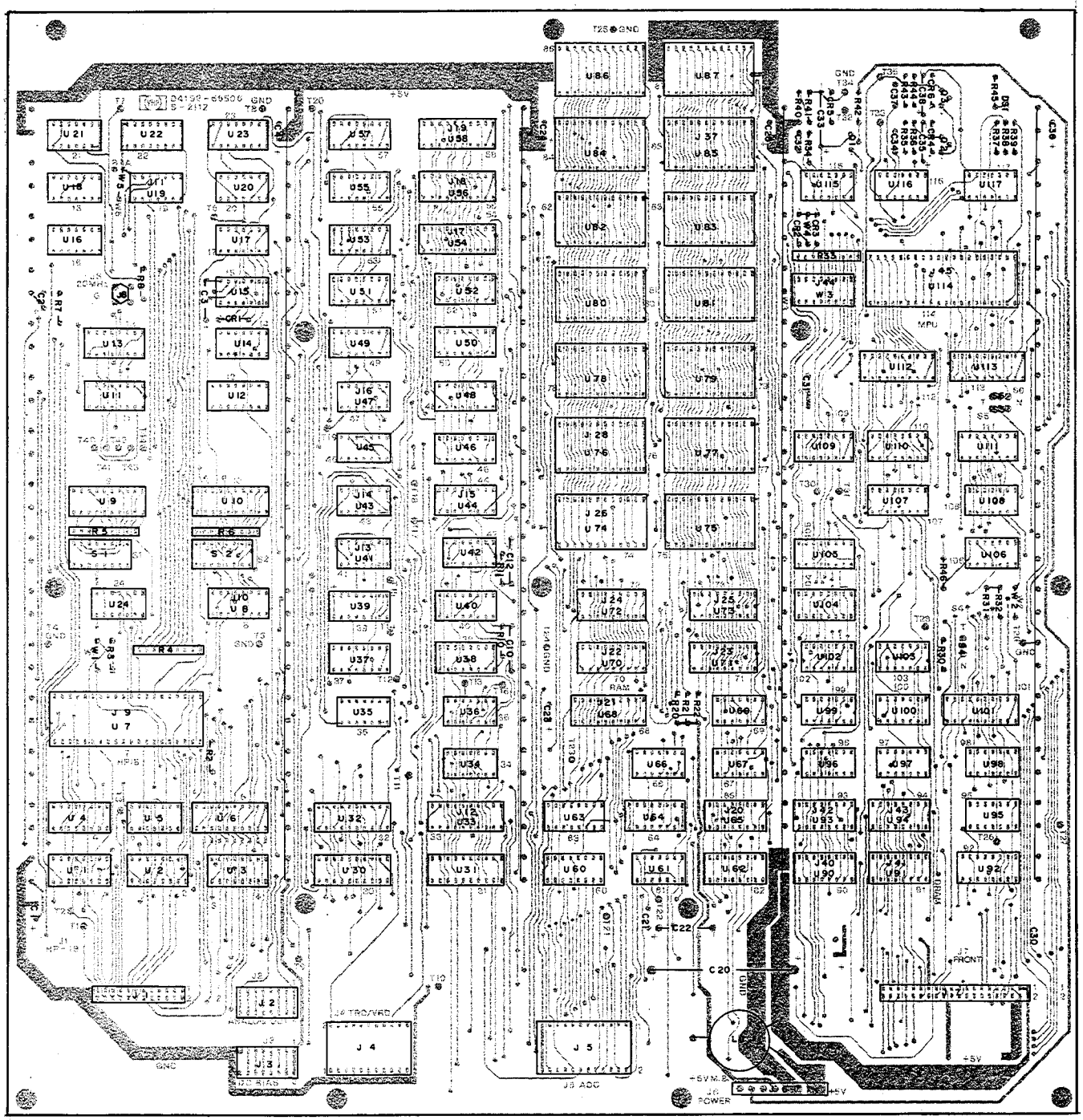

Figure 8-74. A6 Microprocessor Digital Control Board Assembly Component Locations.

A6 MICROPROCESSOR DIGITAL CONTROL (P/N 04192-66506) 1 OF 3 FIGURE 1

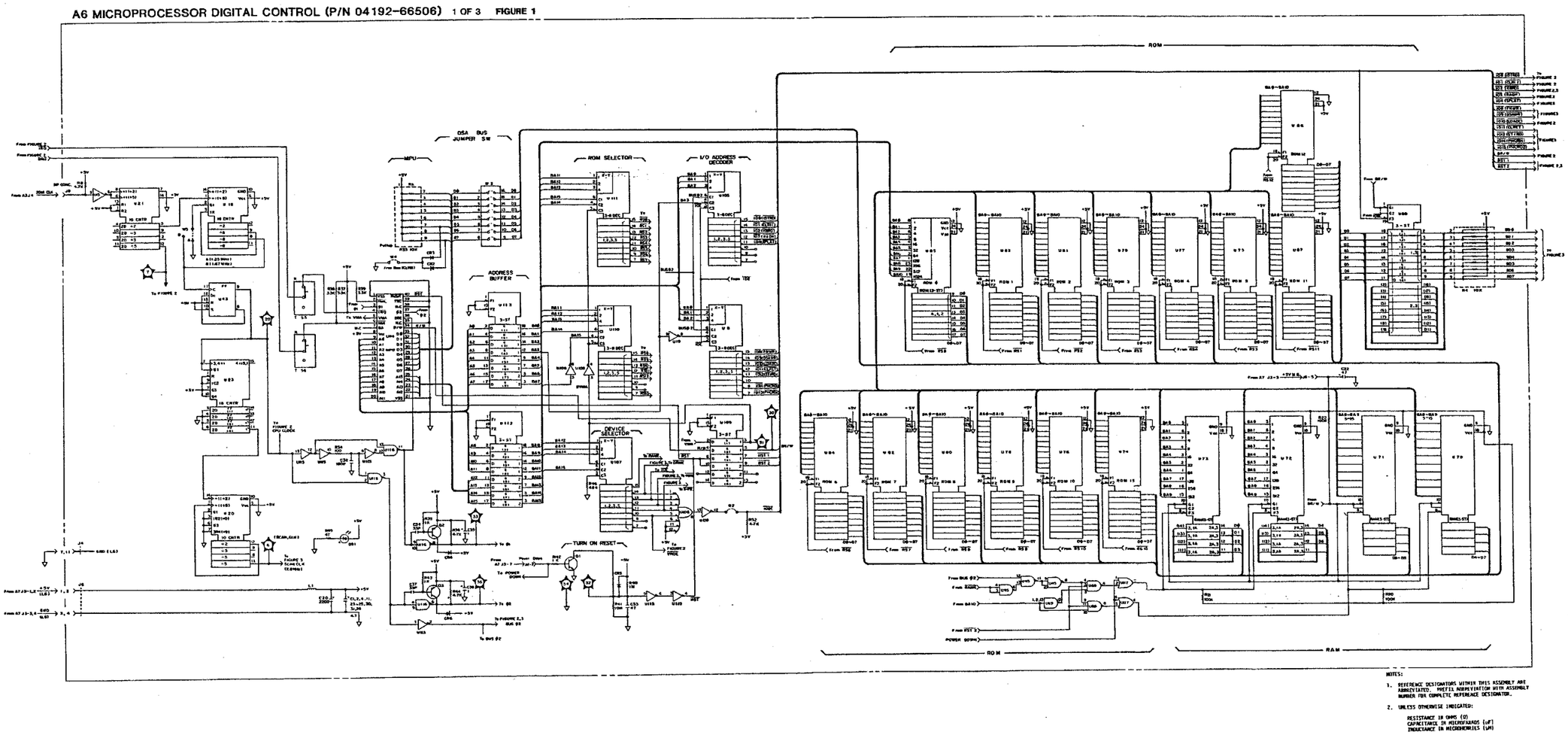


Figure 8-75. A6 Microprocessor Digital Control Board Assembly Schematic Diagram (sheet 1 of 3).

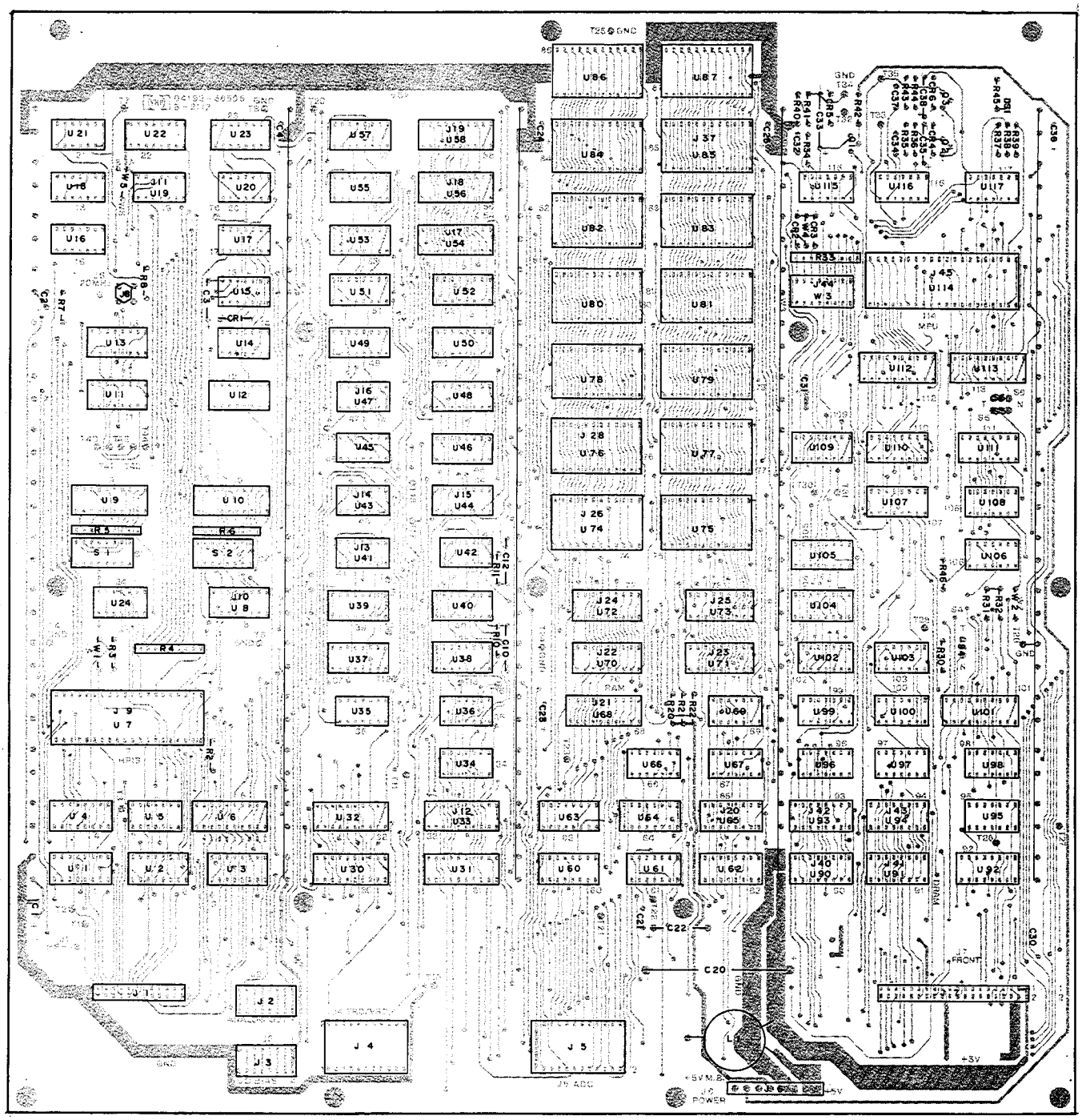

Figure 8-74. A6 Microprocessor Digital Control Board Assembly Component Locations.

A6 MICROPROCESSOR DIGITAL CONTROL (P/N 04192-66506) 2 OF 3 **FIGURE 2**

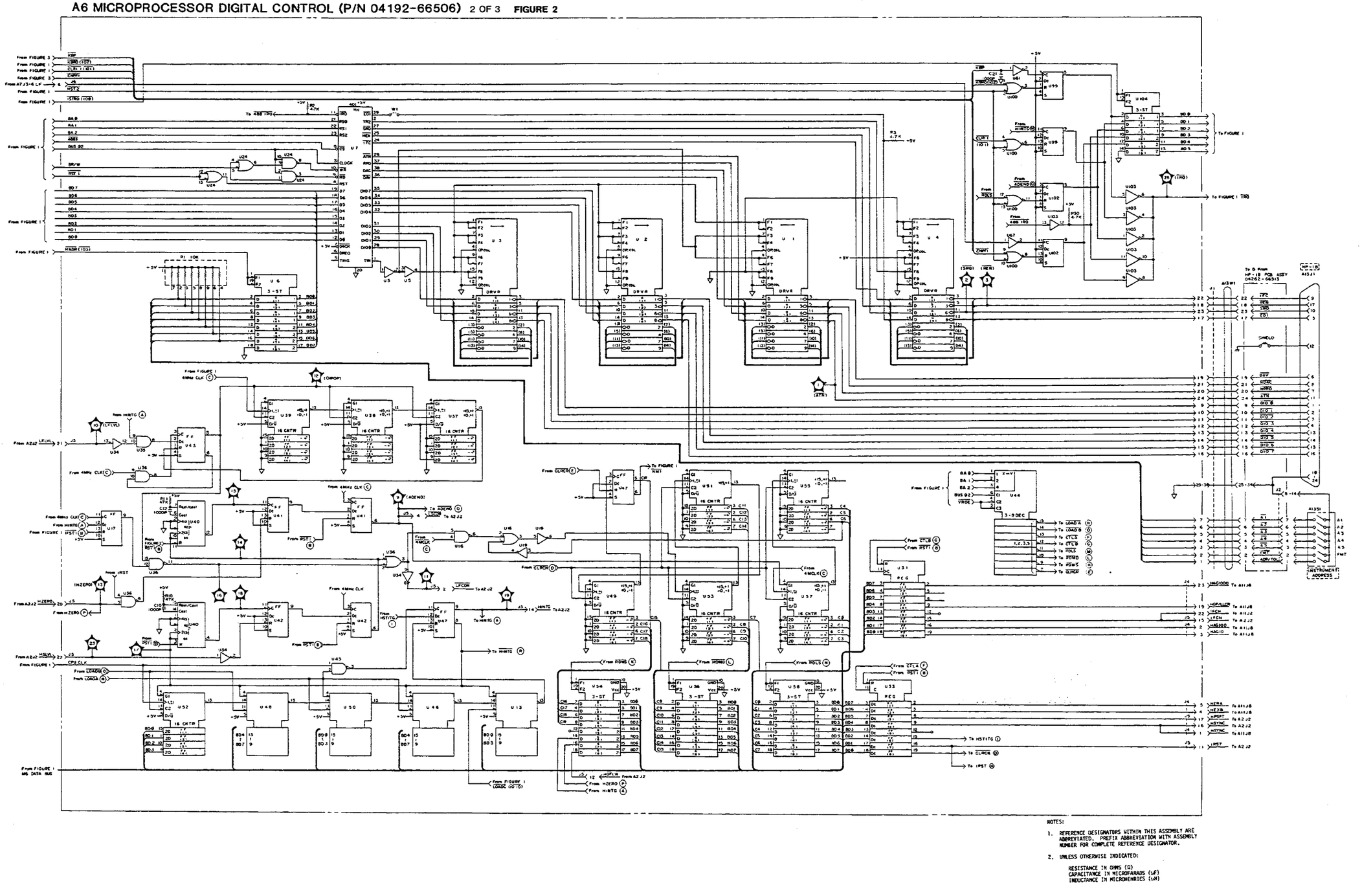

NOTES:

1. REFERENCE DESIGNATORS WITHIN THIS ASSEMBLY ARE ABBREVIATED. PREFIX ABBREVIATION WITH ASSEMBLY NUMBER FOR COMPLETE REFERENCE DESIGNATOR.
2. UNLESS OTHERWISE INDICATED:

   RESISTANCE IN OHMS (Ω)
   CAPACITANCE IN MICROFARADS (uF)
   INDUCTANCE IN MICROHENRIES (uH)

**Figure 8-76. A6 Microprocessor Digital Control Board Assembly Schematic Diagram (sheet 2 of 3).**

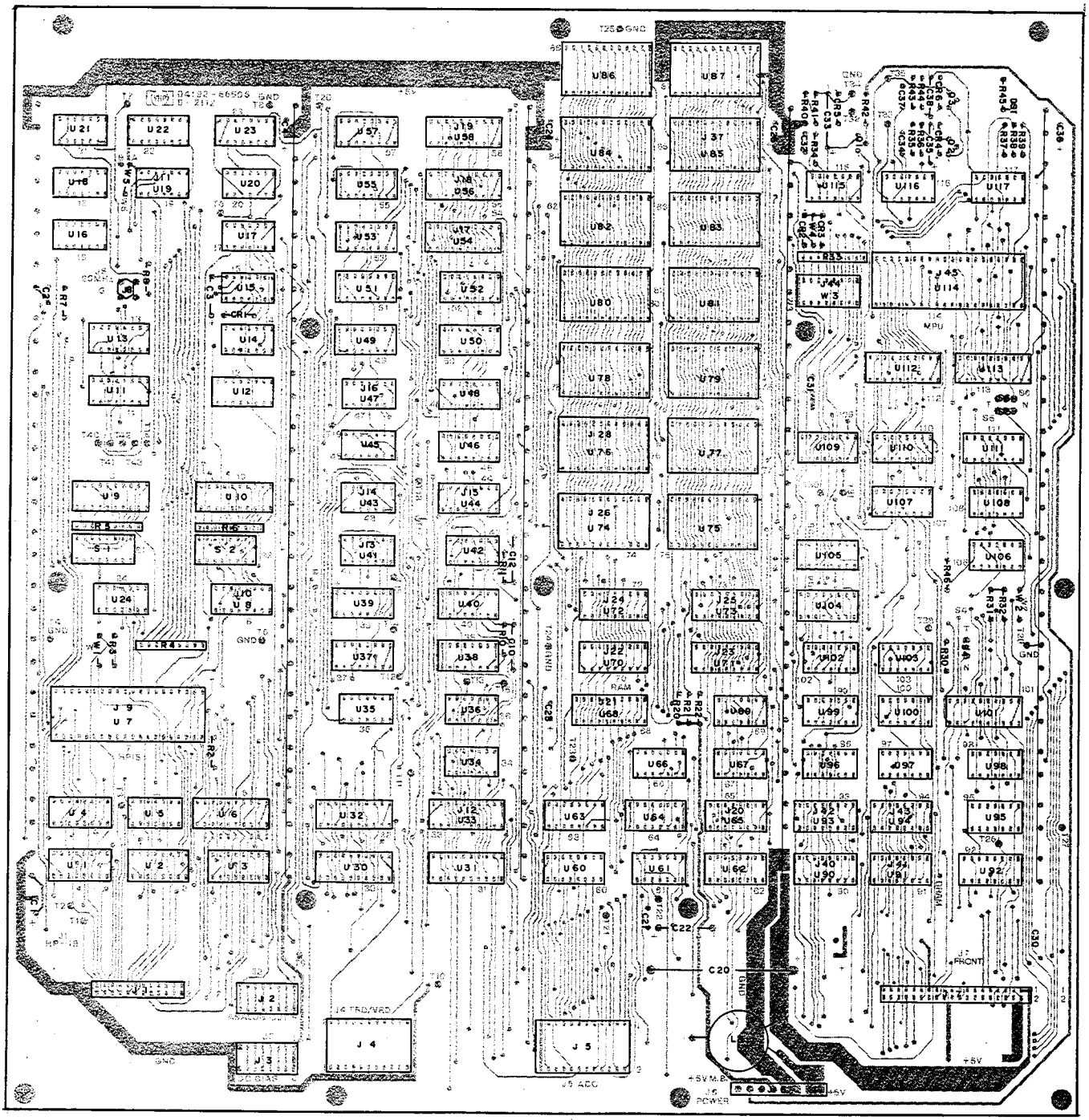

Figure 8-74. A6 Microprocessor Digital Control Board Assembly Component Locations.

A6 MICROPROCESSOR DIGITAL CONTROL (P/N 04192-66506) 3 OF 3 FIGURE 3

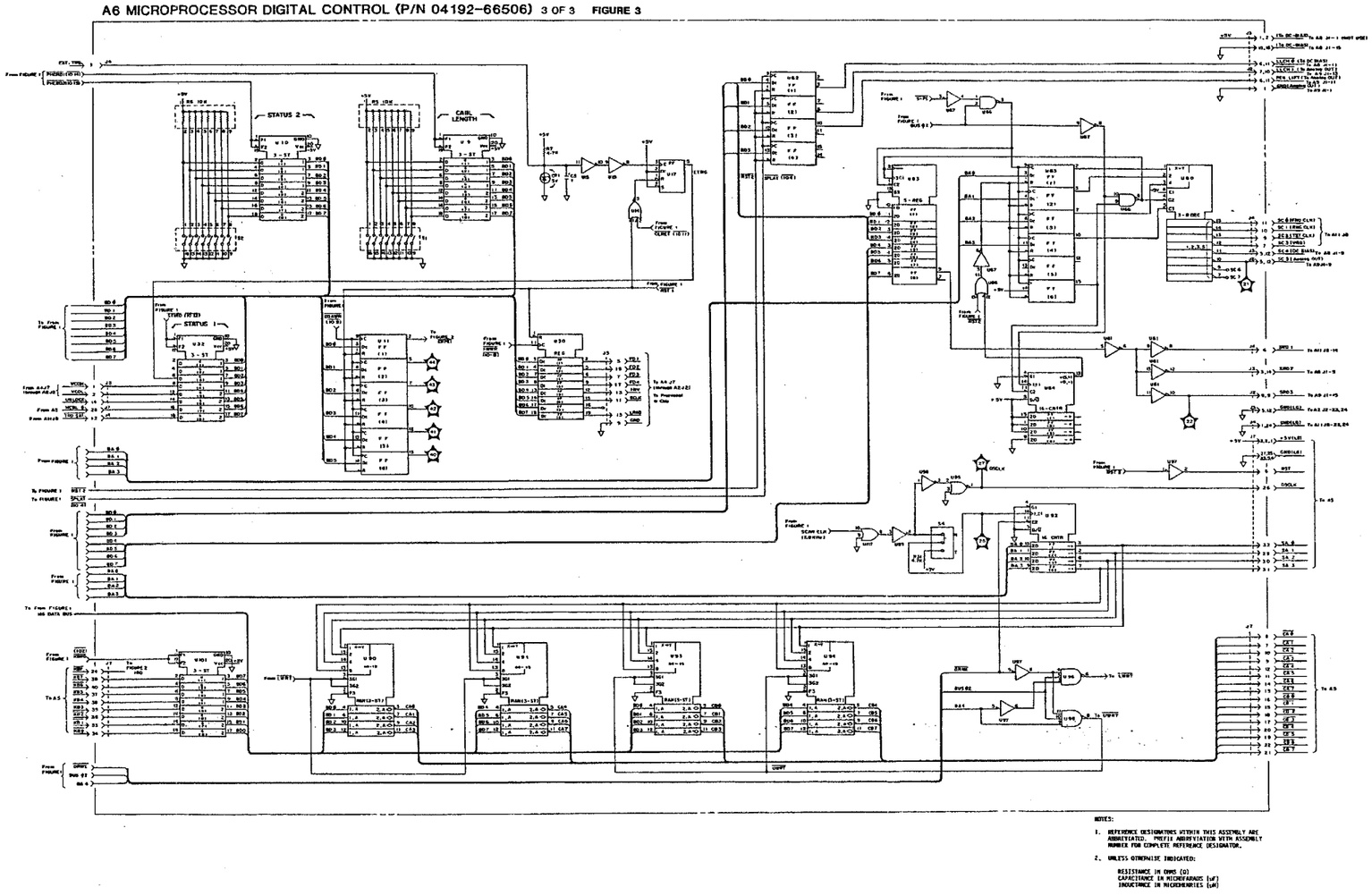


Figure 8-77. A6 Microprocessor Digital Control Board Assembly Schematic Diagram (sheet 3 of 3).

START

Turn the instrument on. Does the fan operate?

YES

Check the dc voltages listed in the table below. Are all the voltages correct?

| Test point | Voltage |
|---|---|
| J3 pin 1 | 5.0 ~ 5.3V |
| J3 pin 5 | 5.0 ~ 5.3V |
| J4 pin 1 | 5.0 ± 0.3V |
| J4 pin 4 | 15 ~ 16.5V |
| J4 pin 10 | −15 ~ −16.5V |
| J5 pin 13 | −20 ~ −22V |

YES

Is the waveform of the signal at A7J3 pin 6 as shown below?

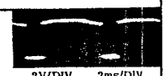


YES

Is the voltage at A7 J3 pin 7 LOW?

YES

Check A7Q1, Q2, CR5, CR6 and battery on the A10 board.

NO

Check A7U1B, U1C, U1D and Q3.

NO

Check A7U1A, CR28, CR29 and U2.

NO

Go to Flow Diagram A.

NO

Does F1 blow after turn-on?

YES

Disconnect cable connectors from A7J3, J4 and J5. Does F1 blow when the instrument is turned on?

YES

Check setting of the LINE VOLTAGE SELECTOR (S3). If correct, disconnect A7RV1 and RV2. Does F1 blow when turned on?

YES

Disconnect A7F3 and L11. Does F1 blow when the instrument is turned on?

YES

Check A7 CR1.

NO

Check S1, Blower and Line Filter.

NO

Reconnect the cable connectors one at a time to find the dc output which causes the fuse to blow. Troubleshoot the circuits powered from that dc output.

NO

Check A7RV1 and RV2.

NO

Check A7Q6, Q7, CR30 and CR31.

Flow Diagram A.

Are any of the dc voltages listed in the table correct?

YES

Troubleshoot the dc power supply channel which outputs incorrect voltage.

NO

Is the dc voltage between the collector of A7Q7 and the emitter of Q6 within 250V and 340V? WARNING

YES

Go to Flow Diagram B on page 8-128.

NO

Does A7F3 blow when the instrument is turned on?

YES

Check A7Q6, Q7, CR30 and CR31.

NO

Does A7F1 or F2 blow when the instrument is turned on?

YES

Check setting of the LINE VOLTAGE SELECTOR (S3). Check A7RV1, RV2 and CR1.

NO

Check A7K1.

**Figure 8-78. A7 Power Supply Board Troubleshooting Flow Diagram — 1 of 2.**

8-145. A7 POWER SUPPLY

8-146. The switching power regulator on the A7 board constructs a light weight, powerful dc power supply, upgrading the mobility of the instrument. An ac line input is directly rectified by CR1 before being stepped down to the required voltages for the various dc power sources. In 220/240V line operation, the CR1 circuitry acts as a bridged rectifier which produces a 250V to 340V dc from the ac input. In 100/120V operation, the line voltage selector switch transforms the configuration of the CR1 circuitry to a double voltage rectifier which provides a dc voltage almost equal to that obtained in 220/240V operation. The RV1 and RV2 varisters protect the instrument in 100/120V operation from connection of 220/240V line by causing the power fuse to blow. To suppress turn-on surge current, k1 allows the paralleled R4 and R5 resistors to restrict the line current for 1 second after the instrument is turned on.

A high dc voltage from the rectifier circuit is periodically chopped by the Q6 and Q7 switching transistors which alternately turn on and off at 29.5kHz. During periods when Q6 and Q7 are on, a primary current flows through the T1 transformer, inducing the secondary ac (pulse) voltages for the +5V, ±15V, and -20V power sources. The duty cycle of the chopped primary current is controlled by the U5 PWM switching controller IC so as to stabilize the secondary output voltages against variances in line voltage and the load currents. This switching control is performed as follows:

A dc voltage for monitoring the secondary output voltage(s) is provided by the CR18 and CR19 rectifiers and the voltage dividers (R63 and R65). To pick up a voltage variance at a high sensitivity, an error detection amplifier in U5 amplifies the difference between the monitor voltage and the reference voltage supplied from the internal regulator through the R62 voltage adjustment potentiometer. A level comparator in U5 switches its output (to HIGH or LOW) each time the sawtooth from the 59kHz sawtooth oscillator crosses the level of the error amplifier output.

The level comparator output is, therefore, a pulse train whose duty cycle decreases with an increase in the monitor dc voltage. The driver circuit, consisting of a flip flop and two NOR gates, alternately outputs the PWM pulses onto the dual switching control lines ( $\phi$1 and $\phi$2) as shown in the figure below:

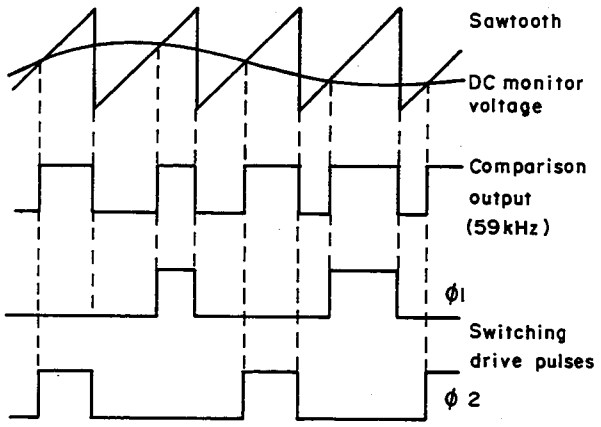


The $\phi$1 and $\phi$2 switching control pulse trains administer the periods for Q6 and Q7 to be on and off. If the monitor dc voltage is too high, the time intervals for the conduction of the primary current decrease in order to lower the secondary output voltages. To prevent the drive pulses from causing a cross current conduction (harmful, concurrent conduction) of Q6 and Q7, the C40 circuit provides a minimum time margin between the $\phi$1 and $\phi$2 switching drive pulses.

The high frequency (29.5kHz) primary current permits the use of a small transformer despite handling relatively high power. A rectified 5V output continuously charges the memory back-up batteries (on the A10 board) as well as supplying power to the digital circuits on the A6 board. When power is lost, Q1 and Q2 turn off to prevent the batteries from discharging to loads other than the RAMs. The +5V dc source for the analog circuits is stabilized by the analog regulator (U3, Q4 and Q5) to improve noise rejection and load regulation performance. Protection against possible power failures is made with several additional circuits that minimize the resultant damage.

These protective circuits actuate the "shut down" input of the U5 PWM switching controller (pin 10) when an abnormality is detected. The functions of the individual protection circuits are explained as follows:

1) Q13 and Q14 : Both Q13 and Q14 are normally off. If the power line voltage is too high, the low voltage rectifier output (from the CR33) exceeds the break down voltage of CR27 and causes Q13 to turn on. Besides, if the monitor dc voltage is too high, it causes CR23 to break down. The biased Q13 causes Q14 to turn on. Additionally, if the power consumption of the instrument is abnormally high, the U4 photo coupler generates a photoelectric current, which is amplified by Q17, and causes Q14 to turn on. Q14 provides enough current to pull up the "shut down" of U5 to HIGH through CR26. Consequently, U5 stops outputting the switching drive pulses. Simultaneously, Q13 and CR38 disable the U6 regulator. The Q13 and Q14 circuit stays at the protection operating states even after the failure is eliminated. To restore them to the normal states, the instrument must be turned off and back on.

2) Q11 and Q12 : The U6 regulator outputs +10V to the U5 PWM switching controller. If the dc output from U6 drops, Q12 goes off and CR25 causes U5 to shut down operation. Concurrently, Q11 turns on and CR34 causes C32 to discharge, disabling the output of the switching drive pulses. Conversely, if the voltage is too high (exceeding 11V), CR36 triggers shut-down of the U5 circuitry.

After the instrument is turned on, a charge current to C32 causes the dc power supply voltages to slowly approach the rated voltages; thus, preventing generation of a transient surge current which could possibly trigger the protective circuit.

The U1 circuit generates the PWF (Power Failure) and the LF (Line Frequency) signals required for the microprocessor to manage the measurement control programs. The U1A transfers the LF signal of double the line frequency to reject the line frequency input noise by selecting the appropriate charge period of the A-D Converter. U1C detects a failure in the +5V power supply (at J3 pins 1 and 2) and the U1B monitors a rectified output (from CR28 and CR29) to detect an abnormality in the primary line voltage. If either U1C or U1B detects an abnormality, the U1D and Q3 circuit sets the PWF line to HIGH.

**WARNING**

**DANGER**

**POSSIBLE ELECTRICAL SHOCK HAZARDS.**
**PRIMARY AC LINE VOLTAGE AND A HIGH DC VOLTAGE ARE EXPOSED WHEN THE SHIELD COVER IS REMOVED.**
**BE SURE TO REMOVE THE POWER FROM INSTRUMENT WHEN DISCONNECTING OR REPLACING A COMPONENT.**
**DO NOT CONNECT GROUNDED INPUT LEAD OF TEST INSTRUMENT TO TP1, TP2, TP3, OR TP4.**

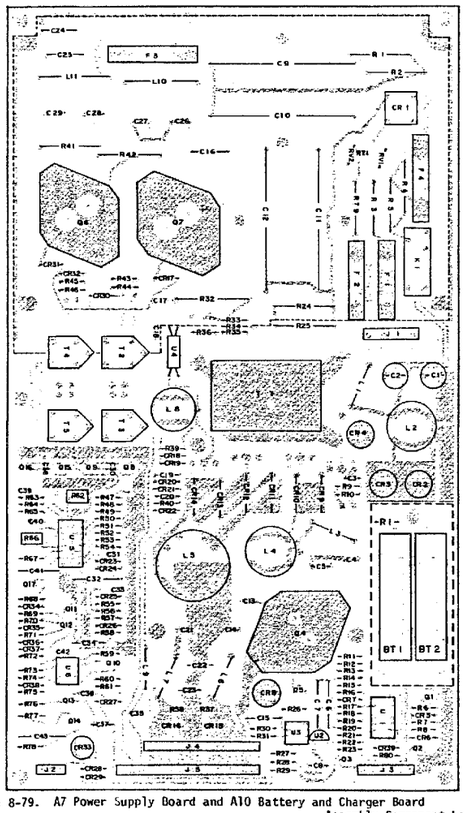


Figure 8-79. A7 Power Supply Board and A10 Battery and Charger Board Assembly Component Locations.

A7 POWER SUPPLY (P/N 04192-66507)

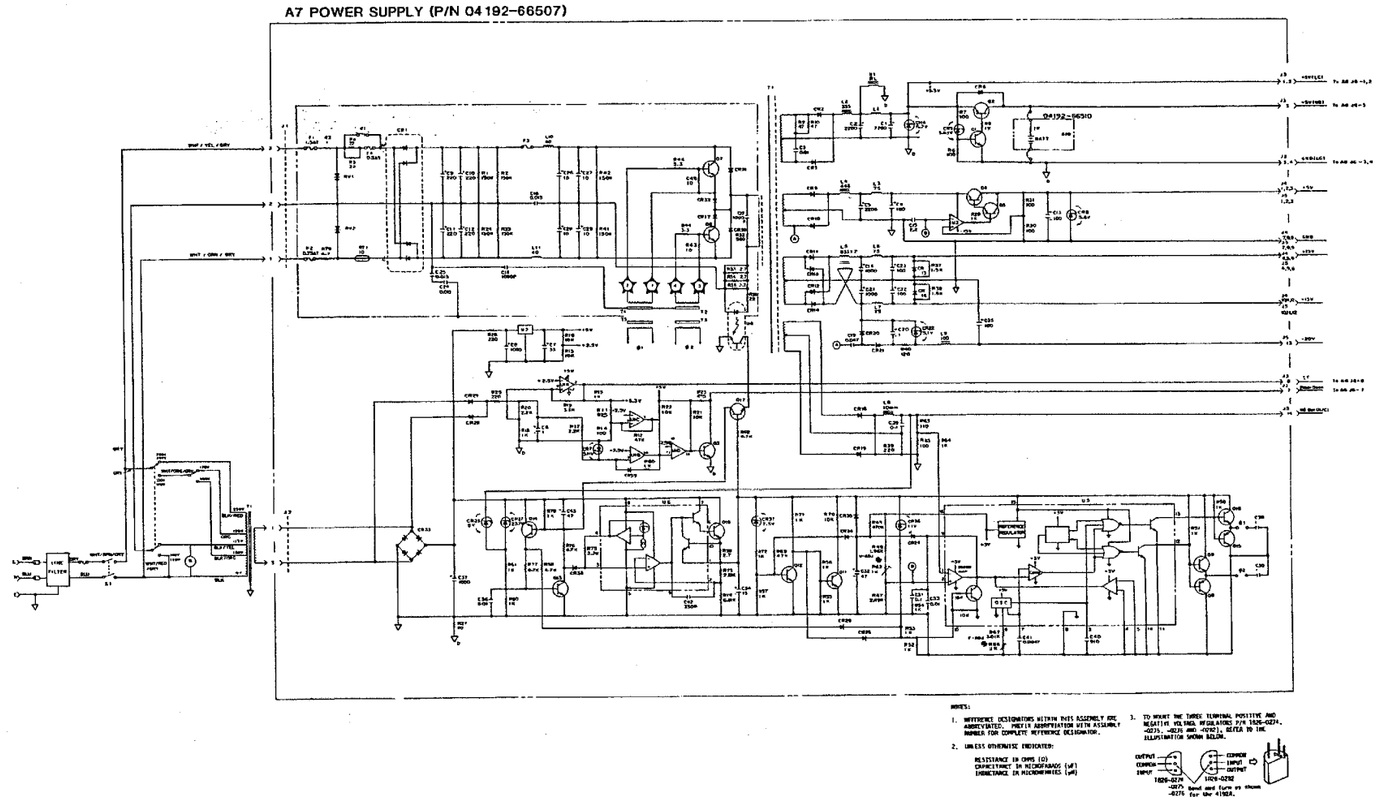


Figure 8-80. A7 Power Supply Board and A10 Battery and Charger Board Assembly Schematic Diagram.

8-147. A8 FLOATING POWER SUPPLY/BIAS SUPPLY

8-148. Floating Power Supply Section

8-149. In order to provide the required dc operating power for the floating measurement circuits, the A8 board contains the power supply circuit which provides 5V, ±15V, and ±40V dc voltages isolated from the circuit common of the main dc power sources. The floating output power supply circuit is configured with four identical DC-AC-DC converters, which supply their respective output powers to separate sections in the floating measurement circuit. Each DC-AC-DC converter consists of an externally driven vibrator (push-pull driver), an isolation transformer, and rectifier circuits. The push-pull drivers are operated in parallel from the common input signal from U1 oscillating at approximately 1MHz. The 1MHz signal gains power from the ±15V dc source supplied to the driver circuits. The T6, T10, T14 and T21 transformers transmit the output power of the driver circuits to the secondaries, isolated from the primary power source. Finally, the high frequency outputs from the secondaries are rectified to dc. To prevent a high level 1MHz signal from interfering with operations of outer circuits, the entire floating power supply is double shielded.

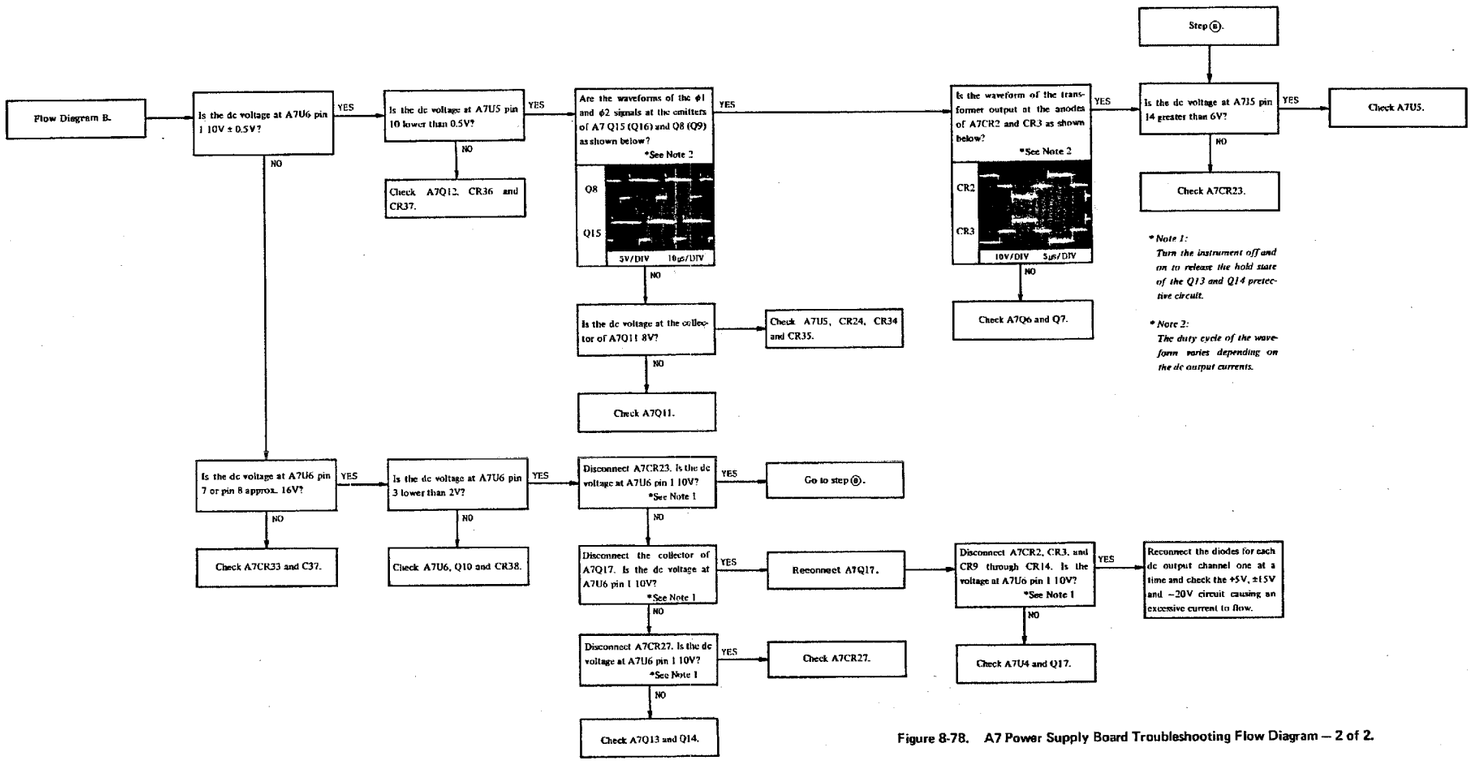


Figure 8-78. A7 Power Supply Board Troubleshooting Flow Diagram — 2 of 2.

## A8 FLOATING POWER SUPPLY/BIAS SUPPLY BOARD TROUBLESHOOTING GUIDE

Floating Power Supply Section

1) Observe the CLK signal at A8TP1 with an oscilloscope. The trace on the CRT should be a 1MHz square wave at 4Vp-p. The frequency of the CLK signal need not be an accurate 1MHz. If it is not normal, observe the oscillator output at TP11 to determine which component among A7U1 and Q13 is faulty.

2) Measure the dc output voltages of the four independent power sources configured with the same DC-AC-DC converters. If an abnormality in the dc voltages is found, identify the defective component by comparing the waveforms at the following test points:

   a. TP8, TP9, TP10 and TP12
   b. TP13, TP14, TP15 and TP16

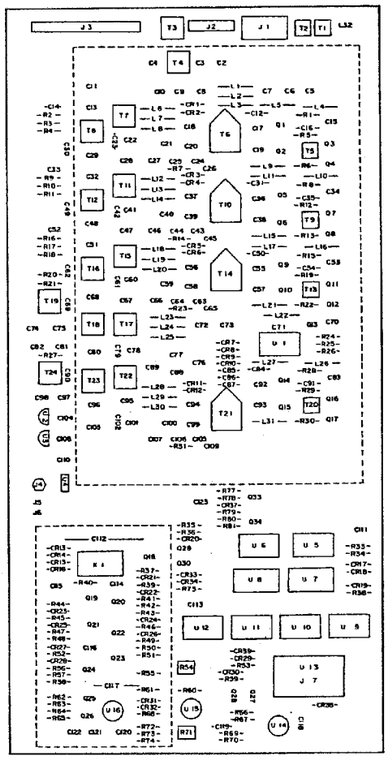

Figure 8-81. A8 Floating Power Supply/Bias Supply Board Assembly Component Locations.

A8 FLOATING POWER SUPPLY/BIAS SUPPLY (P/N 04192-66508) 1 OF 2

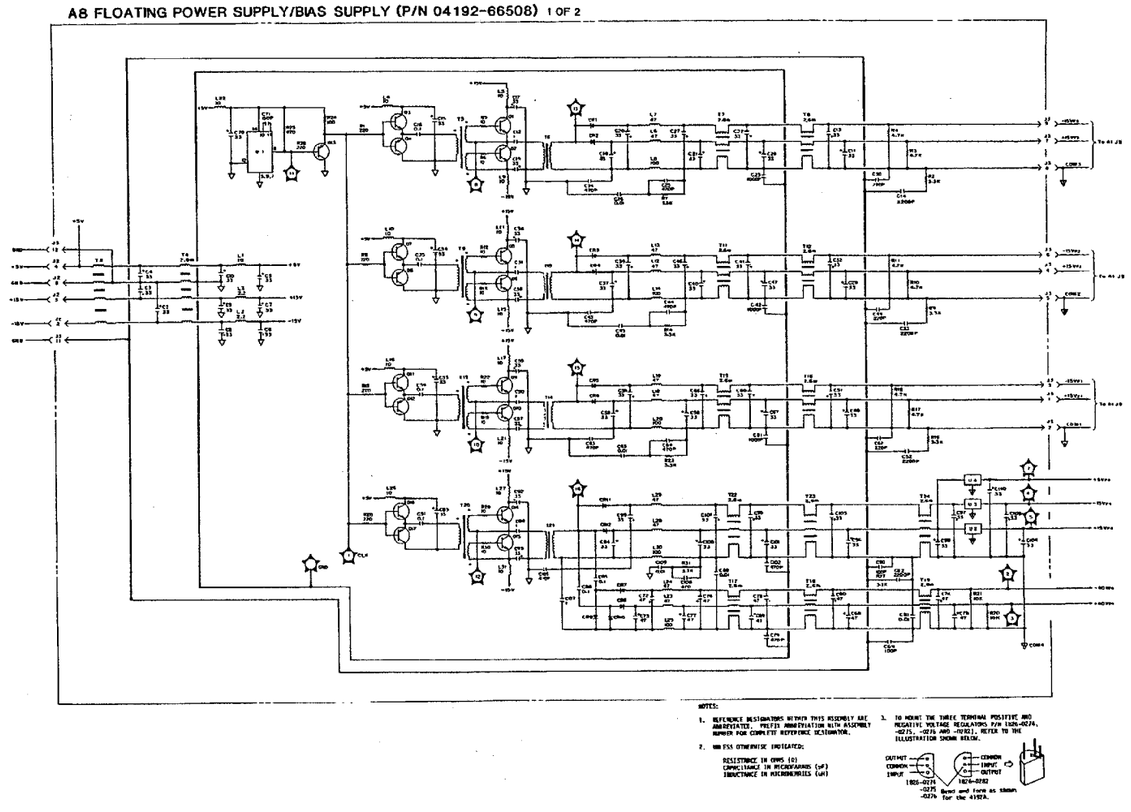

Figure 8-82. A8 Floating Power Supply/Bias Supply Board Assembly Schematic Diagram (sheet 1 of 2).

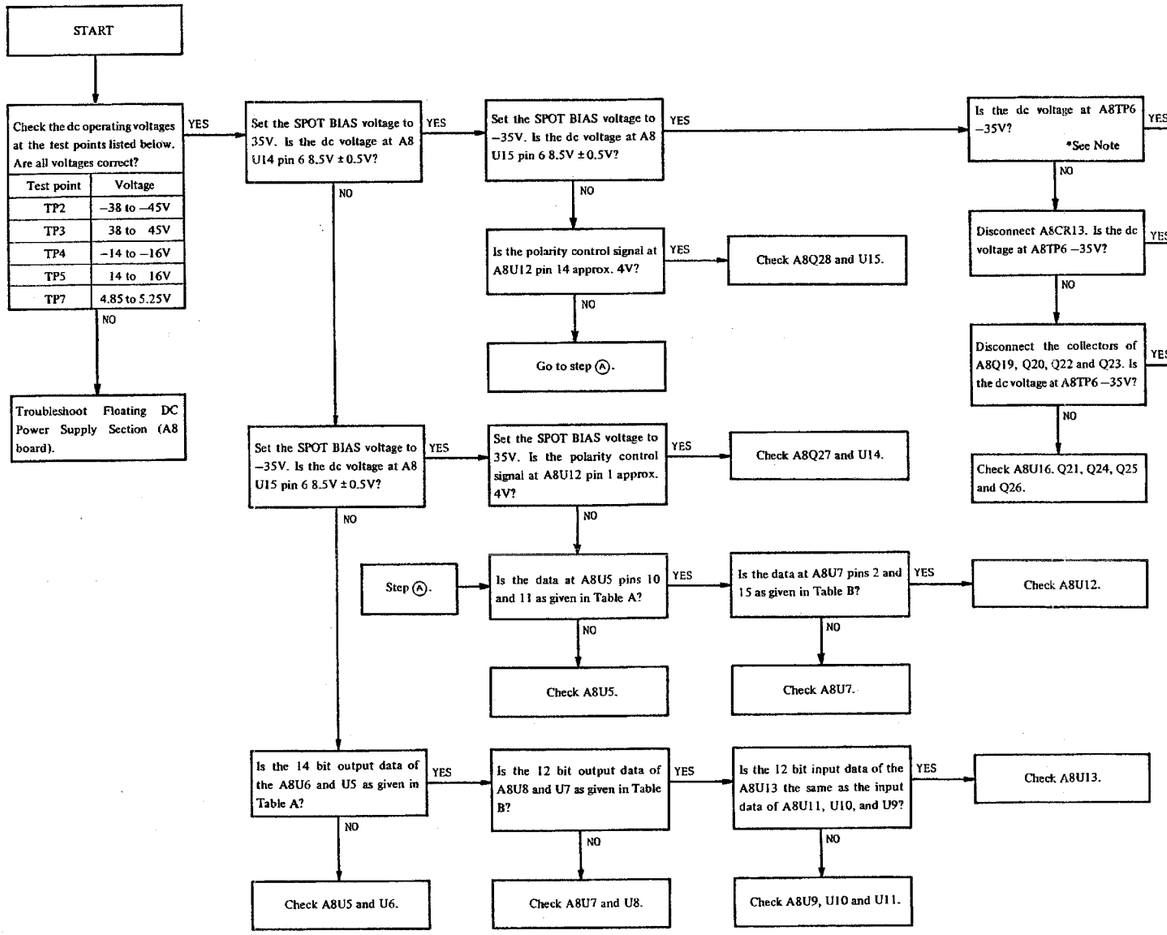


| Test point | Voltage |
|---|---|
| TP2 | −38 to −45V |
| TP3 | 38 to 45V |
| TP4 | −14 to −16V |
| TP5 | 14 to 16V |
| TP7 | 4.85 to 5.25V |

*Note:
*Measure the voltage between A8TP6 and the floating circuit common.*

**Table A. Serial Register Output Data.**

| SPOT BIAS setting | A8U6 pins | | | | | | | A8U5 pins | | | | | |
|---|---|---|---|---|---|---|---|---|---|---|---|---|---|
| | 3 | 4 | 5 | 6 | 10 | 11 | 12 | 13 | 3 | 4 | 5 | 6 | 10 | 11 |
| −35V | 1 | 1 | 0 | 0 | 1 | 0 | 1 | 0 | 0 | 1 | 0 | 0 | 1 | 1 |
| 0V | 1 | 1 | 1 | 1 | 1 | 1 | 1 | 1 | 1 | 1 | 1 | 1 | 0 | 1 |
| | | | | | | | | | | | | | BIAS OFF → | 0 |

**Table B. Latch Output Data**

| SPOT BIAS setting | A8U8 pins | | | | | | A8U7 pins | | | | | |
|---|---|---|---|---|---|---|---|---|---|---|---|---|
| | 10 | 7 | 5 | 12 | 2 | 15 | 10 | 7 | 12 | 5 | 2 | 15 |
| −35V | 0 | 0 | 1 | 0 | 1 | 0 | 0 | 1 | 0 | 0 | 1 | 1 |
| 0V | 1 | 1 | 1 | 1 | 1 | 1 | 1 | 1 | 1 | 1 | 0 | 1 |
| | | | | | | | | | | | BIAS OFF → | 0 |

0 : Low level
1 : HIGH level

**Figure 8-83. A8 Floating Power Supply/Bias Supply Board Troubleshooting Flow Diagram — Bias Supply Section.**

8-150. Floating DC Bias Supply Section

8-151. The floating measurement circuit requires the structure of the dc bias supply floating above ground. A floating bias output with a high voltage accuracy is achieved by use of a D-A Converter, combined with data buffers, permitting input-output isolation. The bias voltage setting data is transferred from the Microprocessor through the SRD2 serial data line and stored in the U5 and U6 registers in parallel data format. In addition to the bias voltage data, polarity control and bias-off signals are simultaneously set in the registers to determine the polarity of the bias voltages and to disable bias output when it is unnecessary. The U9, U10, U11 and U12 Data Buffers accept the bias voltage data in the differential input mode to reduce sensitivity to common mode noise on the input lines as well as to isolate the input circuits from the outputs. Per 1V step of the dc bias voltage output, the U13 D-A Converter provides a negative current output of -1/20.48mA. When the selected bias voltage is negative, the polarity control signal from U12 causes the Q28 switch to go on (Q27 is off), and the U15 I-V Converter yields 5/20.48V from the output current of the D-A Converter per 1V step of the bias voltage. In applications using positive bias voltages, Q27 switch goes on in place of Q28 to accept the D-A Converter output current with the U14 I-V Converter. Then, U15 acts as an inverting amplifier and reverses the polarity of the voltage output from U14. The shielded power amplifier expands the maximum bias output voltage to ±35V as well as enhancing the ability to supply a bias current to conductive DUTs. When the bias output is short-circuited, the CR25 and CR27 protective diodes limit the maximum bias current to 25mA. When the bias function is not used, the k1 relay disconnects the bias output line from the power amplifier to assure the bias voltage being zero volts. The CR13, CR14, CR15 and CR16 zener diode limitter prevents harmful dc voltage (over ±40V) from being output at the instant of an abnormality.

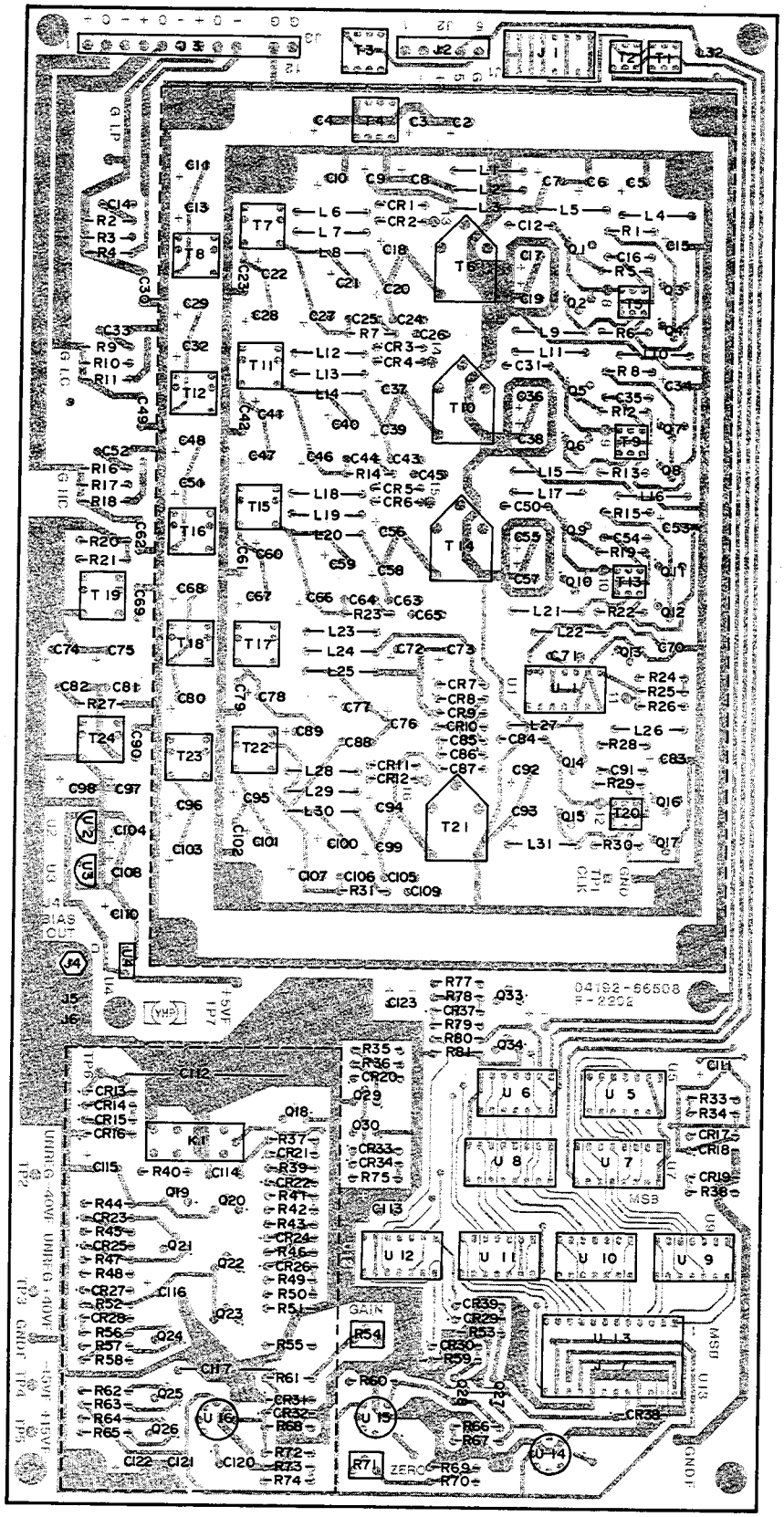


Figure 8-81. A8 Floating Power Supply/Bias Supply Board Assembly Component Locations.

## A8 FLOATING POWER SUPPLY/BIAS SUPPLY (P/N 04192-66508) 2 OF 2

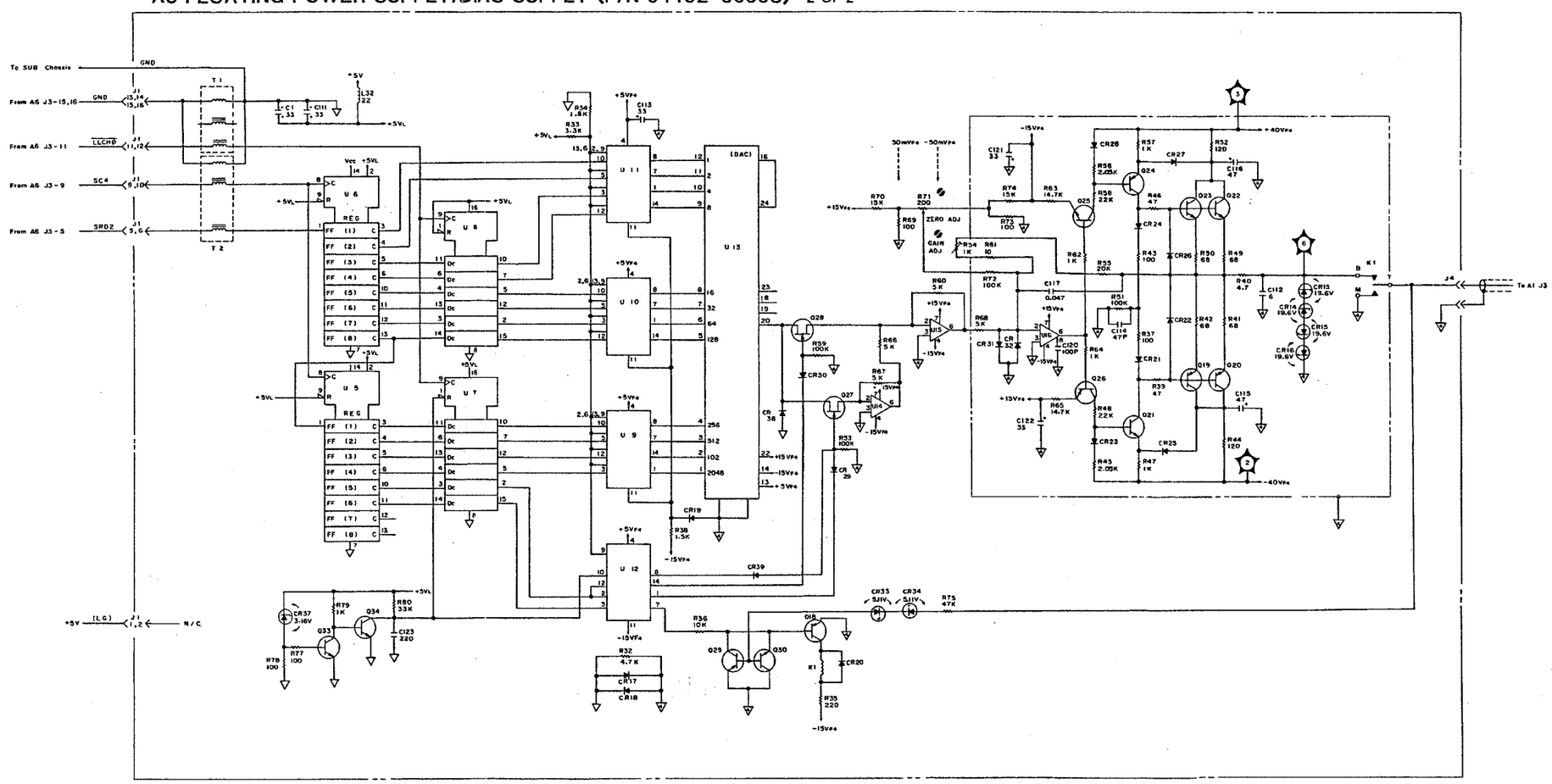


Figure 8-84. A8 Floating Power Supply/Bias Supply Board Assembly Schematic Diagram (sheet 2 of 2)

NOTES:

1. REFERENCE DESIGNATORS WITHIN THIS ASSEMBLY ARE ABBREVIATED. PREFIX ABBREVIATION WITH ASSEMBLY NUMBER FOR COMPLETE REFERENCE DESIGNATOR.
2. UNLESS OTHERWISE INDICATED:

   RESISTANCE IN OHMS (Ω)
   CAPACITANCE IN MICROFARADS (μF)
   INDUCTANCE IN MICROHENRIES (μH)

3. TO MOUNT THE THREE TERMINAL POSITIVE AND NEGATIVE VOLTAGE REGULATORS P/N 1826-0274, -0275, -0276 AND -0282), REFER TO THE ILLUSTRATION SHOWN BELOW.

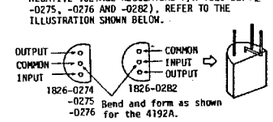

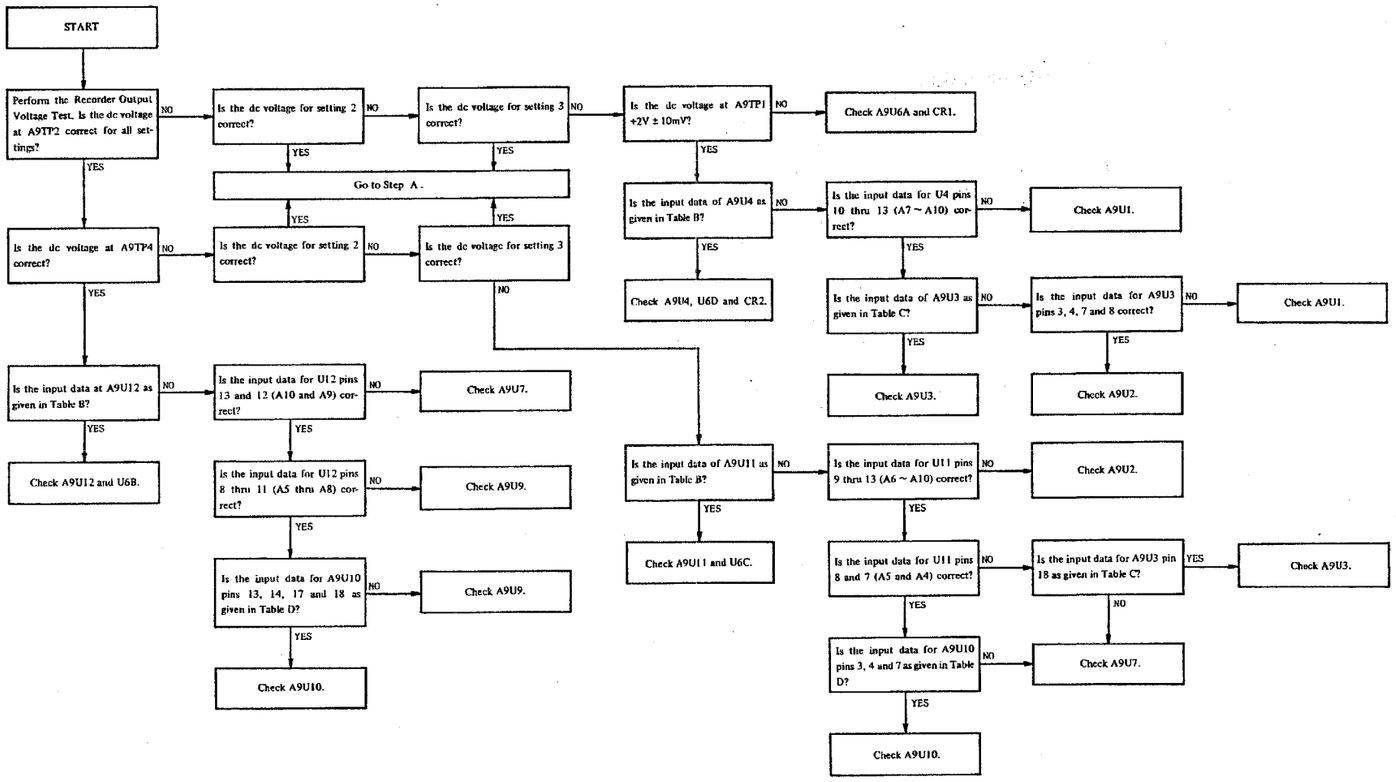


| | U8 pins | |
|---|---|---|
| | 5 | 6 |
| Setting 2 | 0V | 0V |
| Setting 3 | 4V | 4V |

| | U8 pins | | | |
|---|---|---|---|---|
| | 1 | 2 | 3 | 4 |
| Setting 2 | 0V | −0.8V | 0V | −0.8V |
| Setting 3 | −0.8V | 0V | −0.8V | 0V |

| | U3 Pin 17 | U10 Pin 8 |
|---|---|---|
| Setting 2 | 0V | 0V |
| Setting 3 | 4V | 4V |

**Table B. Input Data for U4, U11 and U12.**

| | Pin numbers | | | | | | | | |
|---|---|---|---|---|---|---|---|---|---|
| | 4 A1 | 5 A2 | 6 A3 | 7 A4 | 8 A5 | 9 A6 | 10 A7 | 11 A8 | 12 A9 | 13 A10 |
| Setting 1 | 0 | 0 | 0 | 0 | 0 | 0 | 0 | 0 | 0 | 0 |
| Setting 2 | 1 | 1 | 1 | 1 | 1 | 1 | 1 | 1 | 1 | 1 |

0 : LOW level
1 : HIGH level

**Table C. Input Data for U3**

| | Pin numbers | | | | | | | |
|---|---|---|---|---|---|---|---|---|
| | 3 | 4 | 7 | 8 | 13 | 14 | 17 | 18 |
| Setting 1 | 0 | 0 | 0 | 0 | 0 | 0 | 0 | 0 |
| Setting 2 | 1 | 1 | 1 | 1 | 1 | 1 | 0 | 1 |

**Table D. Input Data for U10**

| | Pin numbers | | | | | | | |
|---|---|---|---|---|---|---|---|---|
| | 3 | 4 | 7 | 8 | 13 | 14 | 17 | 18 |
| Setting 1 | 0 | 0 | 0 | 0 | 0 | 0 | 0 | 0 |
| Setting 2 | 1 | 1 | 1 | 0 | 1 | 1 | 1 | 1 |

**Figure 8-85. A9 Analog Recorder Output Board Troubleshooting Flow Diagram.**

## 8-152. A9 ANALOG RECORDER OUTPUT

8-153. The A9 board provides analog voltage outputs for recording measurement results on an X-Y recorder by means of D-A conversion of the measurement data. Every time a measurement is completed, 32 bit measurement data is sent from the Microprocessor to the U1, U2, U7 and U9 serial registers through the SRD 3 serial data line. The data transfer is performed in the following sequential order : Frequency/Bias data (10 bits), polarity of DISPLAY B data (1 bit), DISPLAY B data (10 bits), polarity of DISPLAY A data (1 bit) and DISPLAY A data (10 bits). The three sets of the 10 bit data represent the individual measurement display values.

The status of these binary display data determine the magnitudes of the input for the U4, U11 and U12 D-A Converters assigned to each channel of the analog recorder outputs. Thus, the output current of each D-A Converter is proportional to the displayed values. The U6B, U6C and U6D I-V Converters translate the current outputs from the D-A Converters into the voltage signals suitable for input to general X-Y recorders.

Regarding the polarity of DISPLAY A and DISPLAY B data, the polarity control bits of the transferred data governs the U5 polarity control switch. If DISPLAY A data is, for example, a positive value, a negative D-A converter output current from U4 is applied to the negative input of U6D, thus generating a positive output voltage for the DISPLAY A terminal. Conversely, if the display data is a negative value, the connection in U5 is switched, and a negative output current from U4 is applied to the positive input of U6D. Therefore, U6D provides a negative output voltage having the same polarity as the display. In the short time required to store the transferred measurement data in the serial registers, the output states of the registers change with the internal shift of the data (in the registers) synchronized with the transfer clock. To prevent the transient confusion in the register outputs from causing spike noise on the analog recorder outputs, the most significant bit to the fourth (or the sixth) bit of the display data are latched by U3 and U10. Lower bits are not latched because their contribution to the generation of spike voltages is negligible. Actually, low-level spike noise is absorbed in the I-V converter stages and do not appear on the trace of an external X-Y recorder.

**Recorder Output Voltage Test**

Perform the following test before proceeding with the troubleshooting flow diagram procedure.

Measure the dc voltages at A9TP2, TP3 and TP4 using the control settings given below:

Setting 1 : Press [Blue] and [2] keys

Setting 2 : Press [Blue] and [3] keys

Setting 3 : Press [Blue], [6] and [7] keys

Compare the dc voltages at these test points with those listed in Table A.

**Table A. Analog Recorder Output Test**

| | Voltages | | |
|---|---|---|---|
| | TP2 | TP3 | TP4 |
| Setting 1 | 0V | 0V | 0V |
| Setting 2 | 1V | 1V | 1V |
| Setting 3 | −1V | − | −1V |

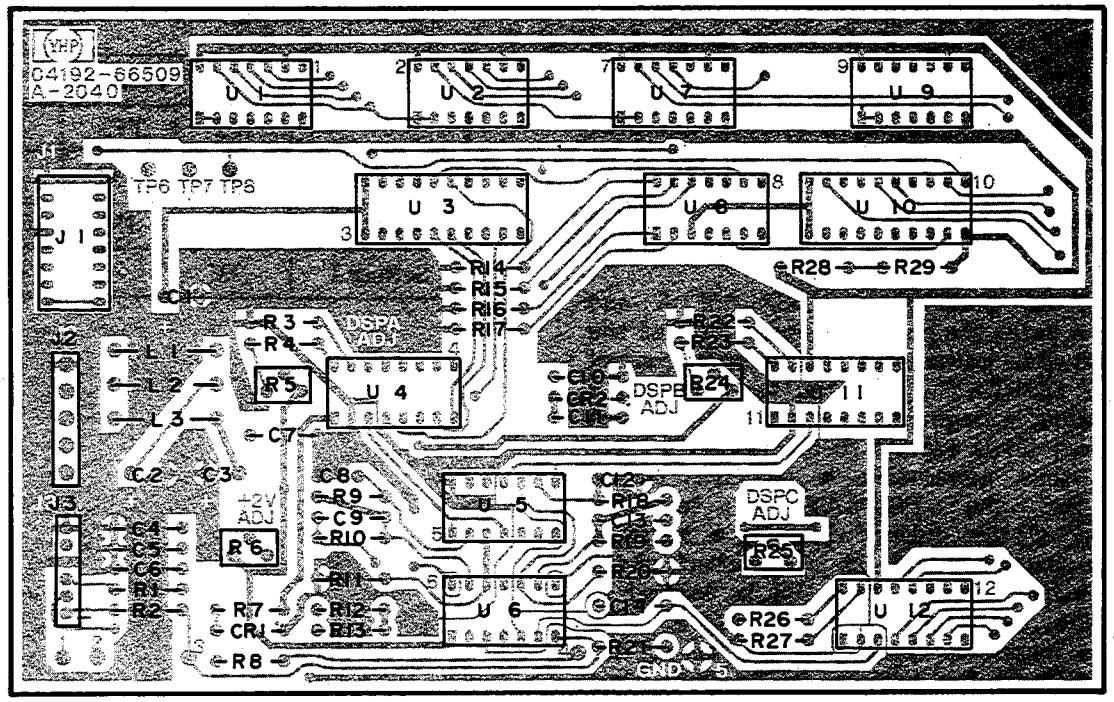


Figure 8-86. A9 Analog Recorder Output Board Assembly Component Locations.

A9 ANALOG RECORDER OUTPUT (P/N 04192-66509)

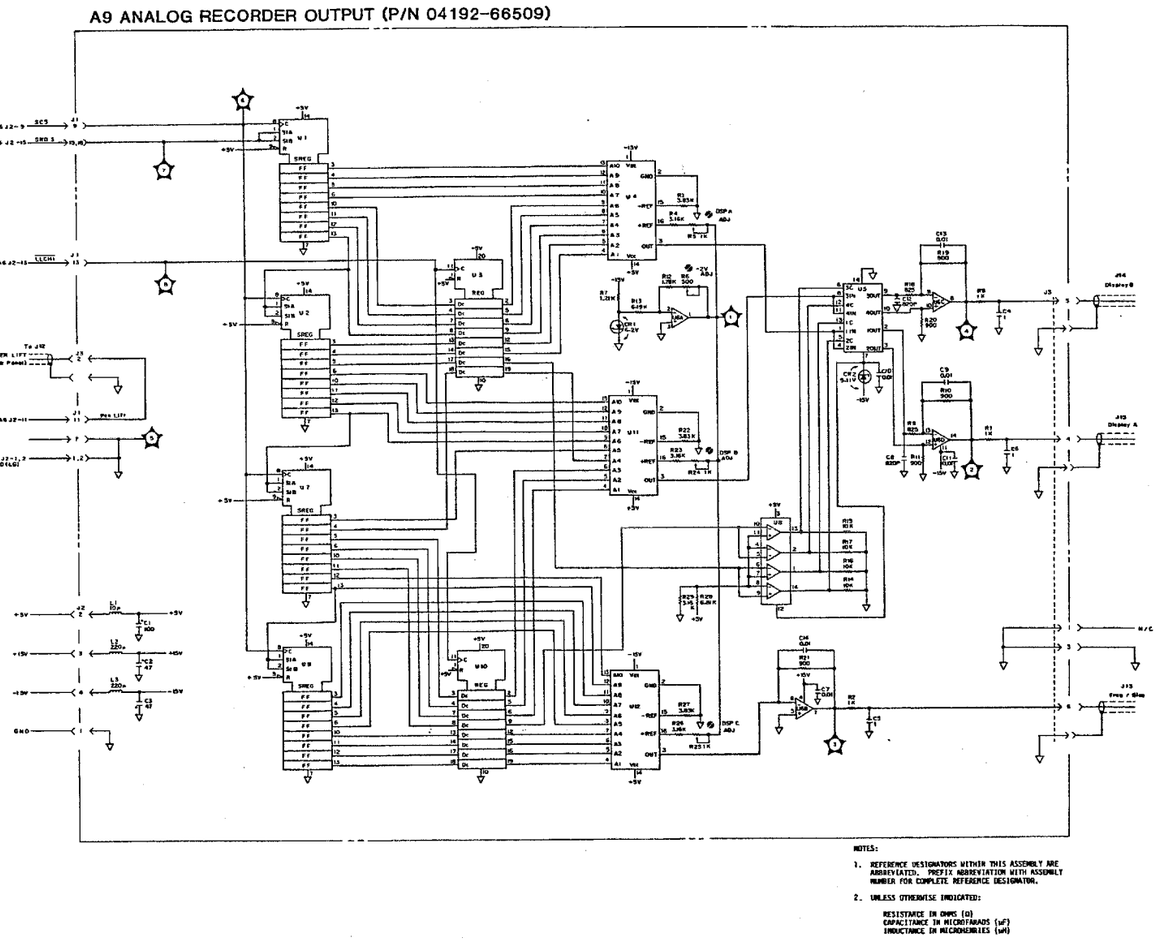

NOTES:

1. REFERENCE DESIGNATORS WITHIN THIS ASSEMBLY ARE ABBREVIATED. PREFIX ABBREVIATION WITH ASSEMBLY NUMBER FOR COMPLETE REFERENCE DESIGNATOR.
2. UNLESS OTHERWISE INDICATED:

   RESISTANCE IN OHMS (Ω)
   CAPACITANCE IN MICROFARADS (μF)
   INDUCTANCE IN MICROHENRIES (μH)

Figure 8-87. A9 Analog Recorder Output Board Assembly Schematic Diagram.

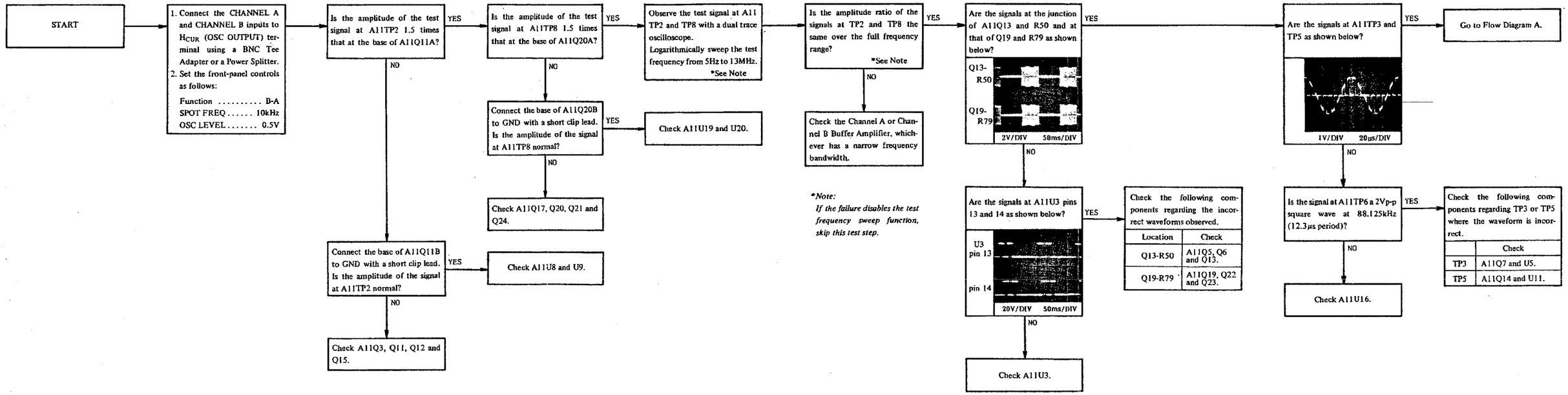


**Figure 8-88. A11 Process Amplifier Board Troubleshooting Flow Diagram – 1 of 2.**

Flow Diagram A.

1. Set the measurement function to $|Z| - \theta$.
2. Connect a 1kΩ resistor to UNKNOWN terminals as DUT.
3. Set the ZY RANGE properly to balance the bridge section.

Set the OSC LEVEL to 1V, 0.58V, 0.34V, 0.2V and 0.11V. Are the amplitudes of the signals at A11TP3 and TP5 almost constant (max/min < 1.6) for all the OSC LEVEL settings?

YES → Set the measurement function to B-A. Connect CHANNEL A and CHANNEL B inputs to $H_{CUR}$ (OSC OUTPUT) terminal. Set the OSC LEVEL to 0.5V.

NO → Is the signal at either A11TP3 or TP5 almost constant?

YES → Check A11U6 or U12.

NO → Do the voltage levels at A11U2 pins 3, 4, 5 and 6 change as follows?

| OSC LEVEL | U2 pins 3 | 4 | 5 | 6 |
|---|---|---|---|---|
| 1 V | L | L | L | L |
| 0.58V | L | L | L | H |
| 0.34V | L | H | L | H |
| 0.2 V | H | H | L | H |
| 0.11V | H | H | H | H |

L : 0V
H : 4V

YES → Check A11U1.

NO → Check A11U2.

Set the SPOT FREQ to 100 kHz. Is the signal at A11TP7 as shown below?

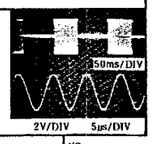


YES → Does the amplitude ratio of the signals at A11TP7 and TP11 change with the OSC LEVEL setting as follows?

| OSC LEVEL | Ampl. ratio |
|---|---|
| 0.5V | 1 |
| 40mV | 10 |

YES → Does the amplitude ratio of the signals at A11TP11 and TP9 change with the OSC LEVEL setting as follows?

| OSC LEVEL | Ampl. ratio |
|---|---|
| 40mV | 1 |
| 5mV | 10 |

YES → Is the amplitude of the signal at A11TP1 half that at TP9?

YES → Is the failure related to the TEST LEVEL MONITOR function only?

YES → Check A11Q8, Q9 and Q10.

NO → Check A11Q16 and U3.

NO → Is the amplitude of the signal at A11TP1 5 times that at TP9?

YES → Check A11Q16 and U3.

NO → Check A11U14, Q8, Q9 and Q10.

NO → Is the amplitude ratio 1 or 10 for both OSC LEVEL settings?

YES → Do the voltage levels at A11U22 pins 1, 2, 13 and 14 change with the OSC LEVEL setting as follows?

| OSC LEVEL | U22 pins 1 | 2 | 13 | 14 |
|---|---|---|---|---|
| 0.5V | 0V | −16V | −16V | 0V |
| 40mV | ⎍ | ⎍ | −16V | 0V |
| 5mV | ⎍ | ⎍ | ⎍ | ⎍ |

⎍ : Changes between 0V and −16V

YES → Check A11Q25 or Q26 of the AG10 or AG100 Amplifier, whichever does not have the correct gain.

NO → Check A11U22.

NO → Check A11U17 or U18, whichever does not amplify the signal correctly.

NO → Is waveform A correct?

YES → Check A11Q7 and Q14.

NO → Is the signal at A11TP4 as shown below?

YES → Check A11U13.

NO → Check A11U7.

Figure 8-89. A11 Process Amplifier Board Troubleshooting Flow Diagram – 2 of 2.

A11 BOARD FUNCTIONAL TEST

1. Local Signal Leakage Test

   1) Connect a short BNC-to-BNC cable between the CHANNEL A and CHANNEL B input terminals.

   2) Connect the probe of an oscilloscope to A11TP1.

   3) Set the front-panel controls as follows :

      4192A:

      Function ..... B-A
      SPOT FREQ ..... 1kHz

      Oscilloscope :

      Sensitivity ..... 1V/DIV
      Sweep Time ..... 10μs/DIV

   4) The amplitude of the local frequency signal on the CRT should be less than 3.5Vp-p.

      Note

      If the instrument fails this test, reverse either Q7 or Q14, mounted on the A11 board, as illustrated below :

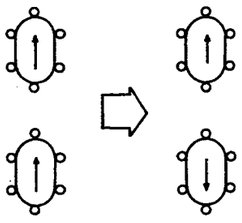

If this does not solve the problem, obtain a new replacement part and find the combination of the parts for Q7 and Q14 which provide minimum leakage of the local signal (below 3.5Vp-p).



8-154. A11 PROCESS AMPLIFIER

8-155. The process amplifier, consists of two Input Buffer Amplifiers, the IF Conversion Mixer, and the IF Amplifier stages. The Buffer Amplifiers are of the differential input design to accept the measurement vector input signals from the floating auto-balance bridge. The K1 and K2 relays at the input stage select either the vector signals of the auto-balance bridge or the amplitude-phase measurement inputs, depending on the selected measurement function. To minimize the load on the input signals, both Buffer Amplifiers have a high input impedance (1MΩ). The U8, U9, U19 and U20 dc feedback amplifiers reduce the output dc offset voltages of the Buffer Amplifiers to an extremely low level (0V). Thereby, the dc level of the input for the IF Conversion Mixer is maintained at zero volts. The circuit constants of the ac coupling input circuits and of the dc feedback amplifiers are important to equalize the gain of the Buffer Amplifiers (channel balance) at very low frequencies. When the amplitude of the buffer amplifier output is too large, CR9 (or CR22) clips the saturated output signal (maximum +8V and -12V peak) at -8V so that the waveform becomes symmetrical with respect to zero volts. Therefore, because the saturated output does not yield a dc which transiently sways the bias voltage conditions in the amplifier, CR9 (CR22) shortens the time required to recover normal operation of the Buffer Amplifier.

When the HEXB control signal is HIGH, the vector signal output from the $E_{DUT}$/CH B Buffer Amplifier passes through the signal selector switch (Q5 : ON, Q6 : OFF, Q13 : ON) and is applied to the IF Conversion Mixer. When HEXB is LOW, the HERA control signal enables the signal selector switch (Q22, Q23 and Q19) following the $E_{RR}$/CH A Buffer Amplifier to output the vector signal to the Mixer. To obtain the channel isolation performance necessary to measure the input amplitude ratio at the maximum of 100dB, the Input Buffer Amplifiers, along with the signal selector switches, are shielded separately for each channel.

By means of heterodyne frequency conversion, the IF Conversion Mixer drops the frequency of the vector input signal (= test frequency) to a 78.125kHz IF or 69.444kHz IF. This IF conversion is performed as follows : In the basic mixer circuit, an input signal (ft) is periodically chopped by the switch (FET) turning on and off

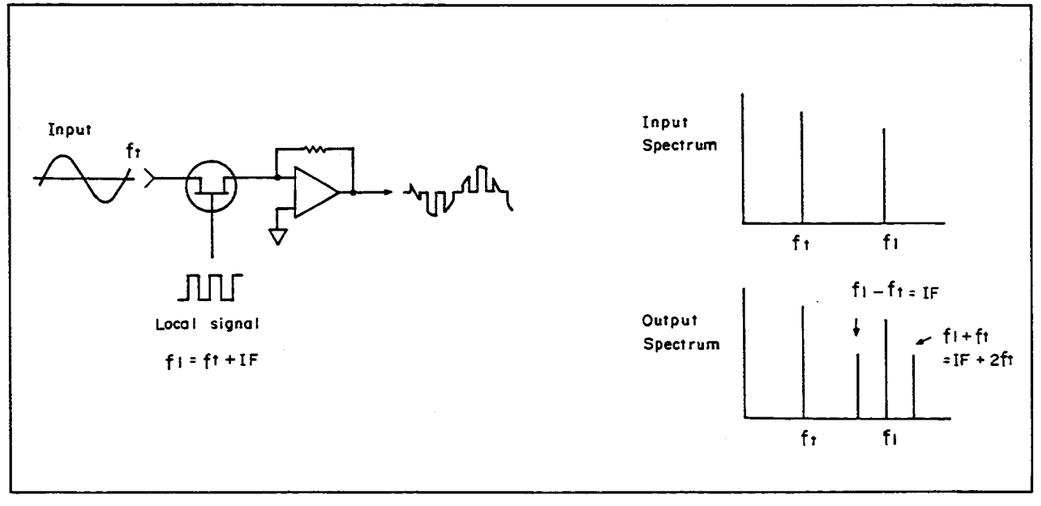


Figure 8-90. Basic IF Conversion Mixer.

The output of the mixer contains ft and fl input frequency components greater than the fl±ft sidebands. Notice that the sideband frequencies approach the fl component as the test frequency lowers. The high level fl component can not be easily filtered out, leaving the IF signal. Additionally, as the test frequency approaches IF, similar difficulty in elimination of the ft component occurs.

at the frequency of the local signal (fl). The spectrum composition of the chopped signal contains the ft, fl, fl+ft, fl-ft and the intermodulation frequency components between their harmonics. Here, as the local frequency fl of the instrument is ft+IF, the fl-ft frequency component becomes a constant IF. To selectively extract the IF vector signal substituting for the measurement vector signal, the other spectral components of the mixer output are filtered out. Actually, the magnitudes of the ft and fl spectral components in the output of the basic mixer circuit are much greater than the magnitude of the IF component. This causes a considerable problem on the required roll-off characteristic of the filter. That is, when the test frequency ft is very low, it is difficult to separate the IF signal by eliminating the greater fl component (fl=ft+IF), which is close to IF.

Also, when the test frequency is near the IF, the filter must have a sharp roll-off characteristic that can eliminate the ft component from the IF signal.

The actual IF Conversion Mixer, consisting of Q7, Q14, U5, U11 and U7, solves this problem. The double-balanced switching operation of Q7 and Q14 produces only the IF output, suppressing the generation of the ft and fl components. Figure 8-91 shows a simplified schematic of this mixer circuit. The Q7B and Q14B switches simultaneously turn on and off in phase with the local signal. The Q7A and Q14A switches operate in reverse phase with the local signal. Complementary switching outputs from the U5 and U11 variable gain amplifiers are summed by U7 to synthesize their waveforms. With the improved mixer circuit, the ft input signal is common mode input for the U7 differential amplifier and, thus, does not appear at the output of the mixer (because of the CMR). Regarding the local signal, the absence of the fl component at the output is explained using Fourier analysis for the output waveform.

As is obvious from the above explanation, the mixer output contains two sideband frequencies of fl±ft, which become IF and IF+2ft. The U13 IF filter (LPF) rejects frequency components above 90kHz at the mixer output. When the higher sideband frequency, IF+2ft, is above 90kHz (that is, when the test frequency is above 6kHz), the IF filter blocks this sideband component. Conversely, when the test frequency is lower than 6kHz, both sideband frequency components are present in the output to the IF Amplifier. The effect of the IF+2ft sideband component is finally eliminated by the NMR of the A-D Converter (A2 board) by controlling the charge period dependent on the test frequency. (Note : Thus, the charge period is 1/ft at low test frequencies.) At a test frequency equal to the IF, a part of the ft input signal (=IF), which leaks directly through the mixer, can not be discriminated from the heterodyned IF output signal. Additionally, when an intermodulation

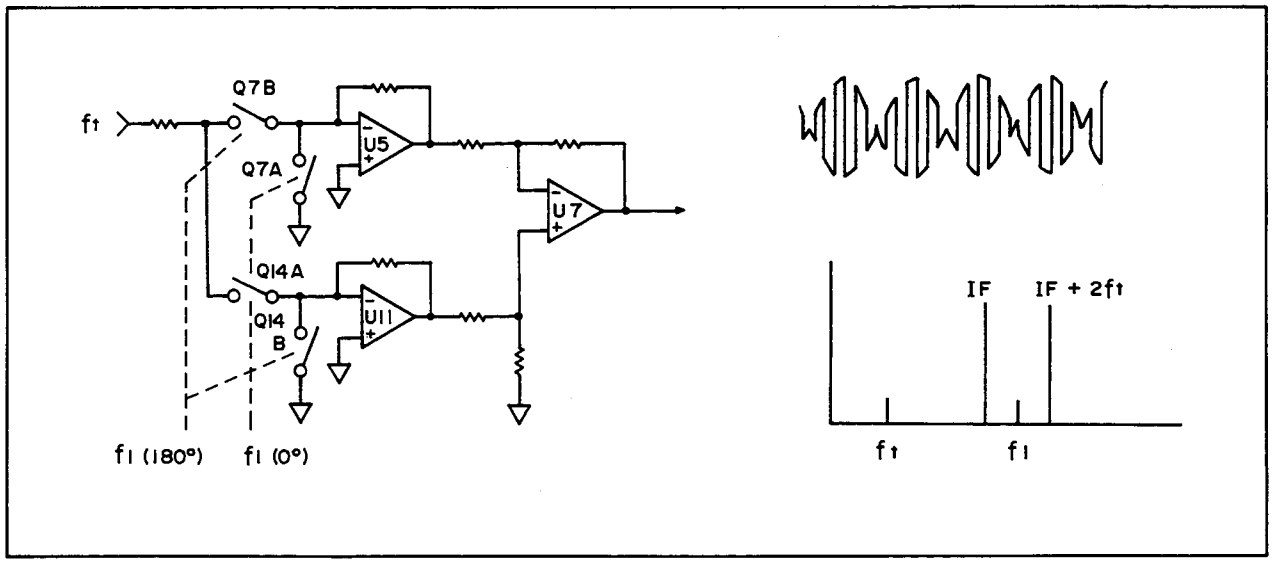


Figure 8-91. Actual IF Conversion Mixer on the A11 Board.

The double balanced IF conversion mixer suppresses the generation of the ft and fl components at the output.

(mixing) between the harmonics of the test frequency and the local frequency signals yields an output whose frequency is equal to the IF, it gets mixed in the correct IF output signal. To avoid these problems, the frequency of the IF signal is automatically changed to 69.444kHz or 78.125kHz so as to maintain a frequency difference of at least 1kHz from the undesired signal.

The relationship betwen the selected IF signal frequency and the test frequency is shown in Table 8-1.

A dc voltage input to the mixer generates a square wave equal to the local frequency and is the result of periodic chopping by Q7 and Q14. This increases the spectral magnitude of the local frequency component, which should be as low as possible. The reduced dc output offset voltages of the Buffer Amplifiers minimize additional generation of the local frequency component in the mixer output.

In impedance measurements, the gain of the U5 and U11 amplifiers is increased to 1.72, 2.87, 4.93 or 8.28 from the minimum of 1.0 as the test signal level is decreased. This step control of the gain is performed for the two divided ranges of the test signal level, 5mV to 70mV and 70mV to 1V, as shown in Table 8-11. At lower ranges, the gain of the IF Amplifier stage is increased by 10 times to offset the difference between the two ranges. Consequently, the level of the IF signal output (from the mixer) is maintained almost constant, compensating for the changes in the test signal level. In amplitude-phase measurements, the gain of the mixer is always 1 regardless of the test signal level.

Individual IF Amplifier stages, AG10, AG100 and AG1000, have 20dB input attenuators selectable for on-off. With the basic setting of the attenuator, the gain of each IF amplifier stage is 1 (20dB loss in the attenuator plus 20dB gain of the amplifier). When the gain of the IF Amplifier is increased to 20dB, the attenuator of the AG10 amplifier is released (Q25A is on; Q25B is off) prior to the AG100 amplifier. The attenuator of the AG1000 amplifier is released only when measuring the amplitude-phase of inputs below approximately -60dBm. The gain control of the IF Amplifier is performed not only to expand the measurement range capability but also to employ a greater gain for low-level test signal inputs. The relationship among the measurement range, test signal level, and the total gain of the IF Amplifier is shown in Table 8-10. The gain of the AG1000 Amplifier, especially, is adjustable to obtain correct display output for the test signal level monitor function. The two potentiometers, R45 and R46, optimize the accuracy independently for 78.125kHz IF and 69.444kHz IF signals.

Table 8-10. IF Amplifier Gain Control (A)

| \|Z\| value of DUT | | 0 - 1Ω | 1 - 10Ω | 10 - 100Ω | 100 - 1kΩ | 1k - 10kΩ | 10k - 100kΩ | 100k - 1MΩ |
|---|---|---|---|---|---|---|---|---|
| Range Resistor (Rr) | | 100Ω | 100Ω | 100Ω | 100Ω | 1kΩ | 10kΩ | 10kΩ |
| Gain of IF Amp. | $E_{DUT}$/CH B | x100 | x10 | x1 | x1 | x1 | x1 | x1 |
| | $E_{RR}$/CH A | x1 | x1 | x1 | x1 | x1 | x1 | x10 |
| Equivalent Rr | | 1Ω | 10Ω | 100Ω | 100Ω | 1kΩ | 10kΩ | 100kΩ |

IF Amplifier Gain Control (B)

| \|Z\| value of DUT | | 0 - 1Ω | 1 - 10Ω | 10 - 100Ω | 100 - 1kΩ | 1k - 10kΩ | 10k - 100kΩ | 100k - 1MΩ |
|---|---|---|---|---|---|---|---|---|
| Range Resistor (Rr) | | Not used | 1kΩ | 1kΩ | 1kΩ | 10kΩ | 10kΩ | 10kΩ |
| Gain of IF Amp. | $E_{DUT}$/CH B | | x100 | x10 | x10 | x10 | x10 | x10 |
| | $E_{RR}$/CH A | | x1 | x1 | x1 | x1 | x10 | x100 |
| Equivalent Rr | | | 10Ω | 100Ω | 100Ω | 1kΩ | 10kΩ | 100kΩ |

Note : Table A applies when the test signal level is greater than 70mV; Table B, when the test signal level is lower than 70mV, inclusive.

The Gain of IF Amplifier is indicated for the respective output signals of the Buffer Amplifiers.

Table 8-11. IF Conversion Mixer Gain Control

| Test Signal Level | Gain of Mixer | Gain Control Data States (U2) | | | |
|---|---|---|---|---|---|
| | | pin 3 ($\bar{d}$) | pin 4 ($\bar{e}$) | pin 5 ($\bar{c}$) | pin 6 ($\bar{f}$) |
| 5mV - 9mV | 8.28 | Ⓗ | Ⓗ | Ⓗ | Ⓗ |
| 9mV - 15mV | 4.93 | Ⓗ | Ⓗ | L | Ⓗ |
| 15mV - 25mV | 2.87 | L | Ⓗ | L | Ⓗ |
| 25mV - 42mV | 1.72 | L | L | L | Ⓗ |
| 42mV - 70mV | 1.00 | L | L | L | L |
| 70mV - 101mV | 8.28 | Ⓗ | Ⓗ | Ⓗ | Ⓗ |
| 100mV - 120mV | 8.28 | Ⓗ | Ⓗ | Ⓗ | Ⓗ |
| 120mV - 210mV | 4.93 | Ⓗ | Ⓗ | L | Ⓗ |
| 210mV - 350mV | 2.87 | L | Ⓗ | L | Ⓗ |
| 350mV - 590mV | 1.72 | L | L | L | Ⓗ |
| 590mV - 1000mV | 1.00 | L | L | L | L |

Note : In Amplitude-Phase measurements, the gain of the Mixer is always 1.

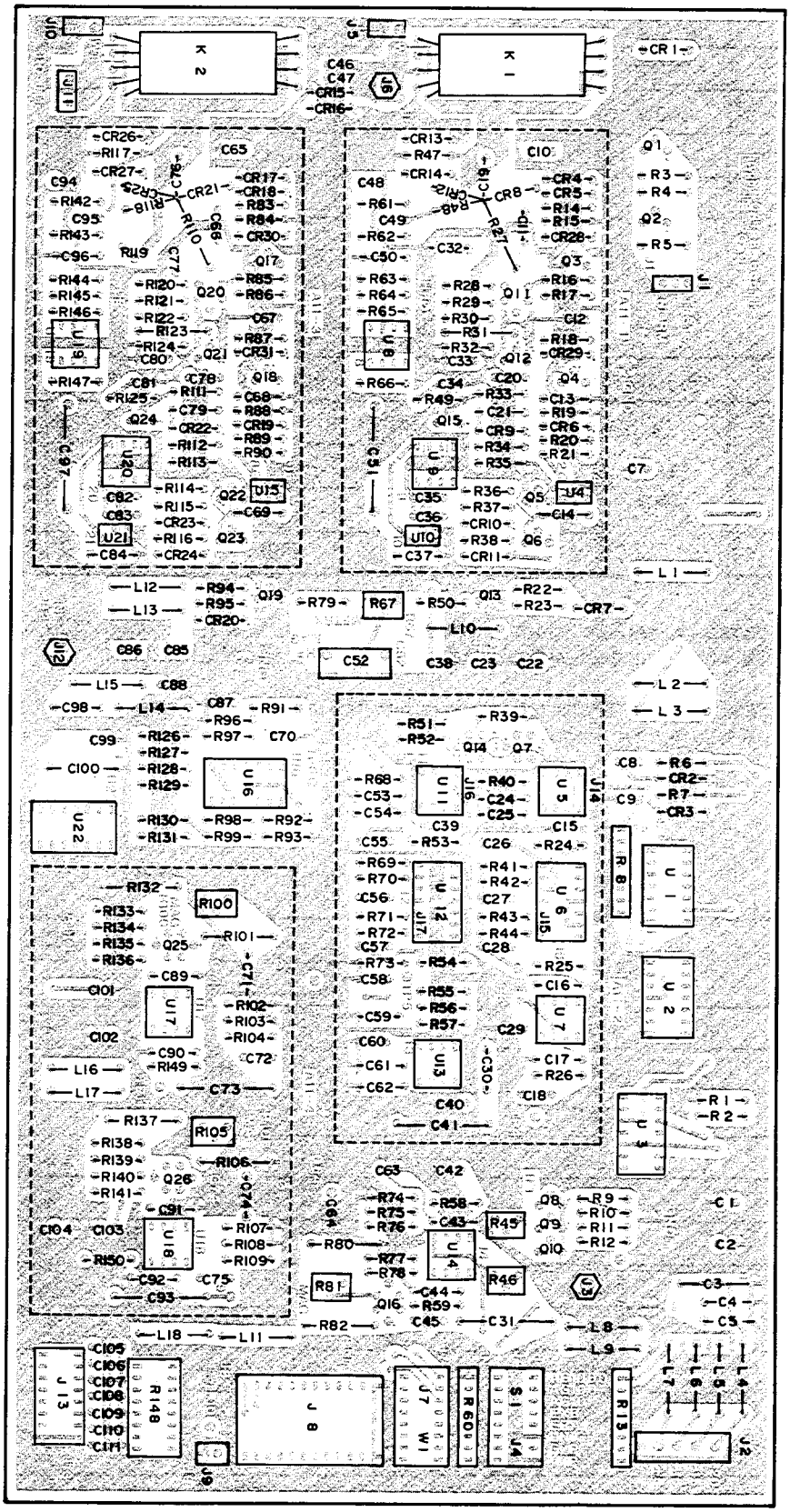

Figure 8-92. All Process Amplifier Board Assembly Component Locations.

A11 PROCESS AMPLIFIER (P/N 04192-66511)

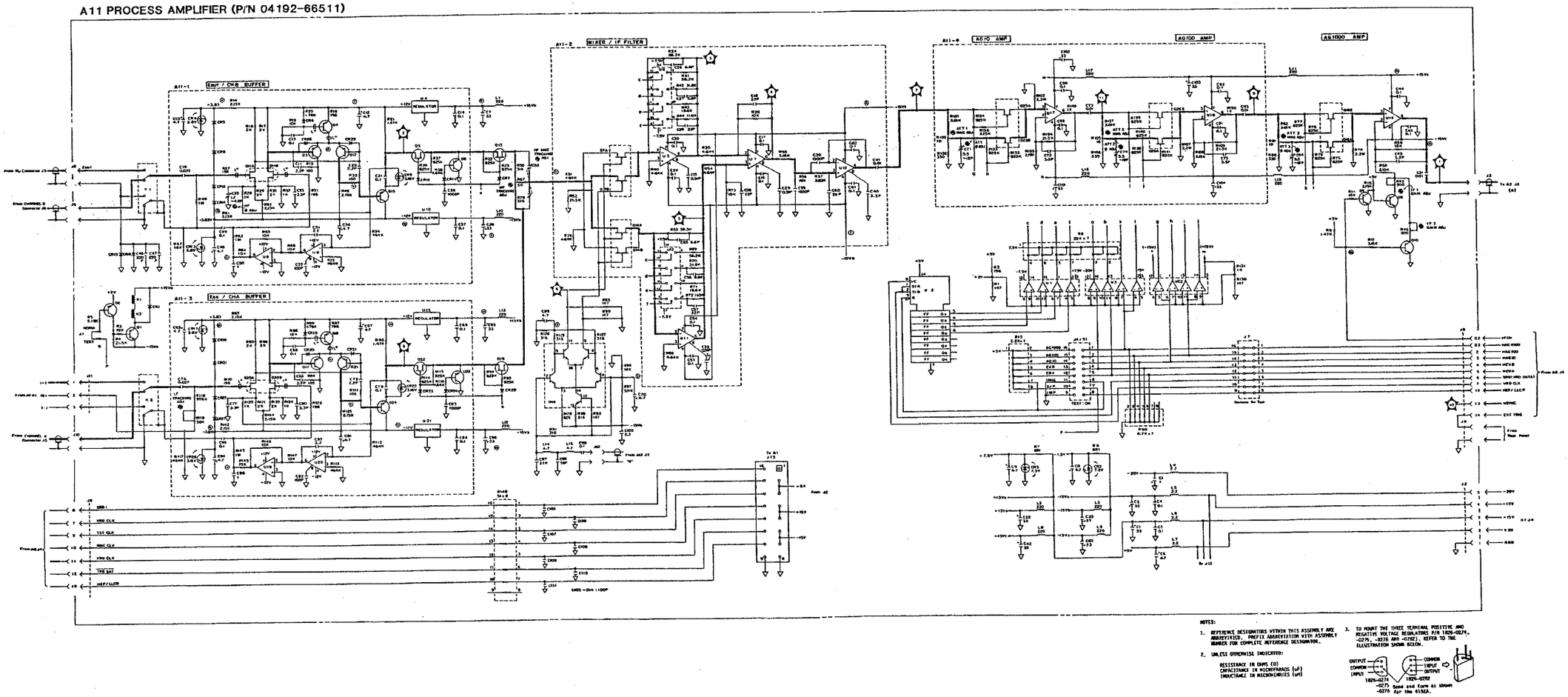


Figure 8-93. A11 Process Amplifier Board Assembly Schematic Diagram.

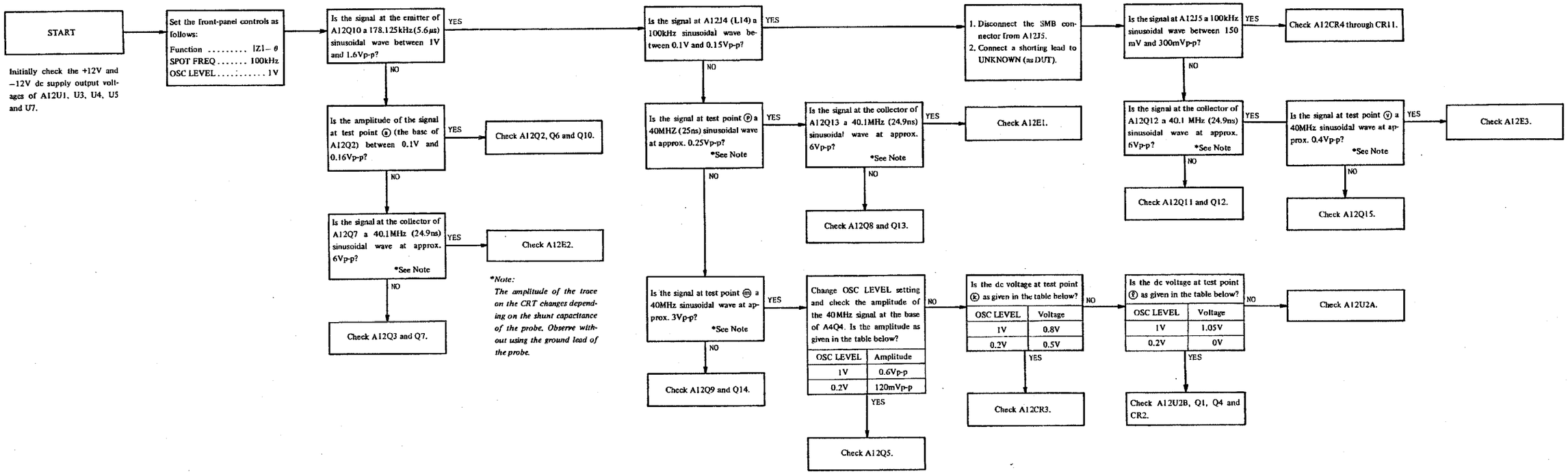


**Figure 8-94. A12 Modulator Board Assembly Troubleshooting Flow Diagram.**

8-156. A12 MODULATOR

8-157. The circuit configuration of the A12 board is functionally divided into three major blocks as outlined below :

1) Produces the (5Hz ~ 13MHz) +IF local frequency signal from the output of the fractional N loop and the 40M-IF signal.

2) Produces the 5Hz to 13MHz test signal from the output of the fractional N loop and the 40MHz signal.

3) Develops the 40MHz vector signal equivalent to the unbalance current vector as controlled by the phase detected unbalance signal and converts it into the 5Hz to 13MHz range resistor signal required to counter-balance the bridge circuit.

To perform these frequency conversions, the source frequency inputs--40MHz, 40M-IF, and the output of the fractional N loop—are supplied to the A12 board. Because the fractional N loop output signal (40.000005MHz to 53MHz) is required for all of these functions, it is fed to the individual circuit blocks via three channel isolation amplifiers (Q3 and Q7, Q8 and Q13, and Q11 and Q12) to avoid interference. The circuit operating theory for each circuit block is described as follows :

1) The E2 lcl mixer mixes the 40.000005MHz to 53MHz signal with the 40M-IF signal to produce the local frequency from the difference between them. The low pass filter following the mixer selectively passes the lowest (5Hz ~ 13MHz) +IF sideband blocking the fundamental input frequency components and higher order sidebands. The filtered output is then amplified to the extent of 1Vp-p.

2) The E1 mixer mixes the 40.000005MHz to 53MHz signal with the 40MHz signal to produce the 5Hz to 13MHz test frequency. The T1 transformer feeds the output signal of the chanel isolation amplifier to the input of the mixer through a balanced circuit configuration. This configuration equalizes the effects of the stray capacitances (present with respect to the ground) for both primaries of the mixer, and, consequently, decreases the level of the 40.000005MHz to 53MHz signal component present in the mixer output. This output is then filtered to selectively obtain a clean test signal between 5Hz and 13MHz.

Depending on the test signal level control setting, the CR3 PIN diode modulator attenuates the level of the 40MHz input

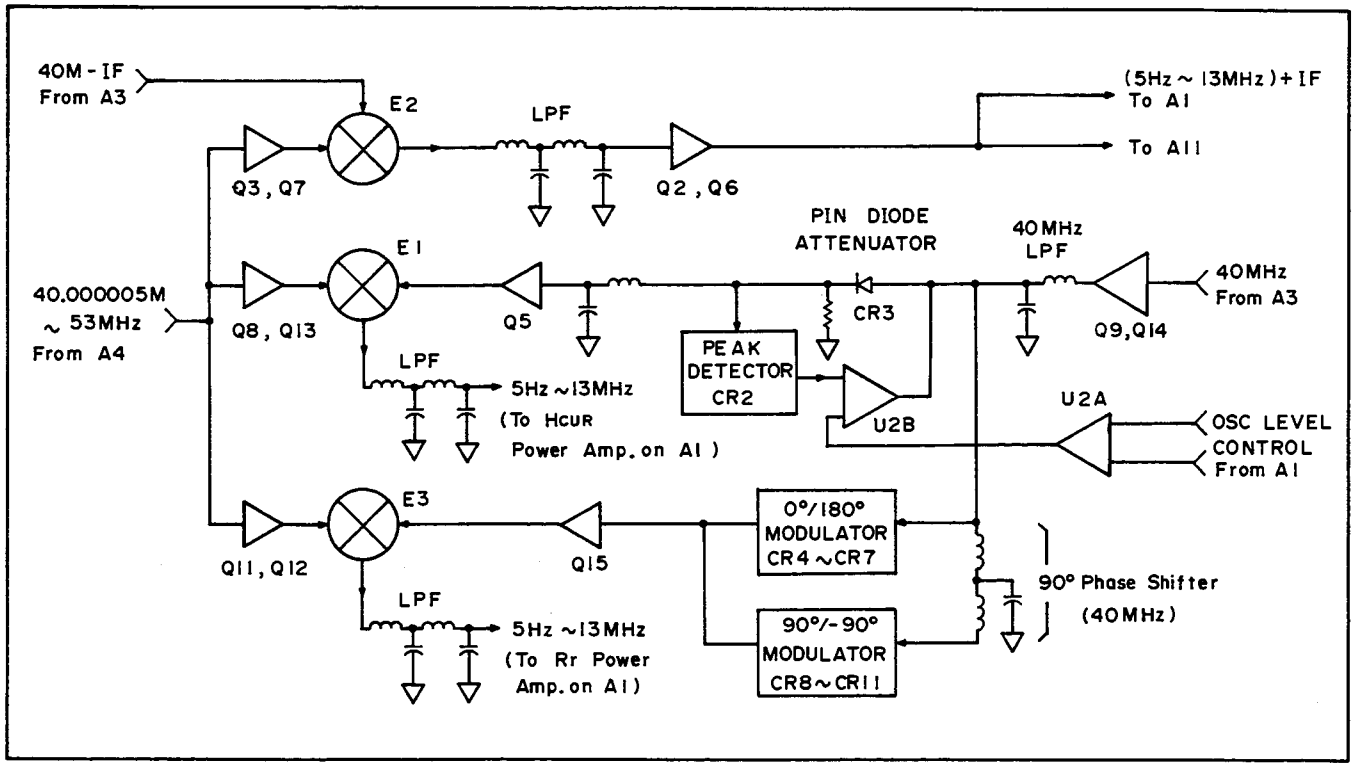


Figure 8-95. A12 Modulator Block Diagram.

signal by factor of 0 to -23dB. The attenuation varies with the change in the forward bias current of CR3 supplied from the U2B ALC amplifier. The U2A ALC amplifier accepts the dc control input for the PIN diode modulator in the differential mode to reject common mode input noise which causes modulation noise in the test signal. To eliminate the attenuation error caused by the non-linear characteristic of the PIN diode, attenuation is controlled in the following manner. The RF peak detector (Q1, Q4 and CR2) detects the attenuated 40MHz signal and provides a dc output voltage proportional to the amplitude of the signal. The U2B ALC amplifier supplies the PIN diode bias current dependent on the difference between the peak detector output voltage and the dc control input voltage from U2A. As the bias current is automatically controlled so that these two input voltages for the U2B are equal, the attenuation is made proportional to the dc control input voltage.

3) The 0°/180° and 90°/-90° vector modulators are composed of combinations of PIN diode networks which act as voltage controlled attenuators. The 0°/180° vector modulator produces the appropriate 0° or 180° vector signal from the 40MHz input signal in the following manner. The T3 transformer provides a set of reverse phase signals of the 40MHz input signal; the center tap of the primary provides a 40MHz signal in-phase with the input and the secondary yields a 180° out of phase signal. In response to the dc output voltage of the 0°/180° phase detector representing the magnitude of the 0°/180° vector component of the unbalance current, the CR4 and CR5 PIN diodes along with CR6 and CR7 attenuate the reverse phase signals. With an increase in the positive 0°/180° dc voltage, the 0° phase signal passes the CR4 and CR5 circuit of the modulator with minimum attenuation. Conversely, the 180° phase signal is greatly attenuated in the CR6 and CR7 circuit. As the result of summing, the 180° phase signal partially cancels the 0° phase signal corresponding to the difference between their amplitudes (losses). Thus, the 0°/180° modulator provides the 0° phase signal resulting from the cancellation unbalance. Similarly, with a negative 0°/180° dc voltage, CR6 and CR7 provide minimum attenuation for the 180° phase signal, less than the 0° phase signal in CR4 and CR5. The 0°/180° modulator, therefore, outputs a 180° phase signal. When the 0°/180° dc voltage is zero, the modulator output is very small because the 0° and the 180° phase signals cancel each other almost completely.

Regarding the 90° and -90° phase signals, the 90°/-90° vector modulator operates similarly to the 0°/180° vector modulator described above. To develop the orthogonal vectors of the 40MHz source signal, the 90° phase shifter (L27, L39 and C65) prepares the 90° phase signal, leading the source, for the 90°/-90° vector modulator input. Thus, it is possible to control the quadrature phase signals (0°, 180°, 90° and -90°) by the phase detected unbalance signal. The required 40MHz vector signal is obtained by adding the 0°/180° and the 90°/-90° vector modulator outputs.

The E3 mixer drops the carrier frequency of the modulator output vector to 5Hz to 13MHz, identical to the test signal frequency. The low-pass filter following the mixer rejects undesired spectral components of the mixer output.

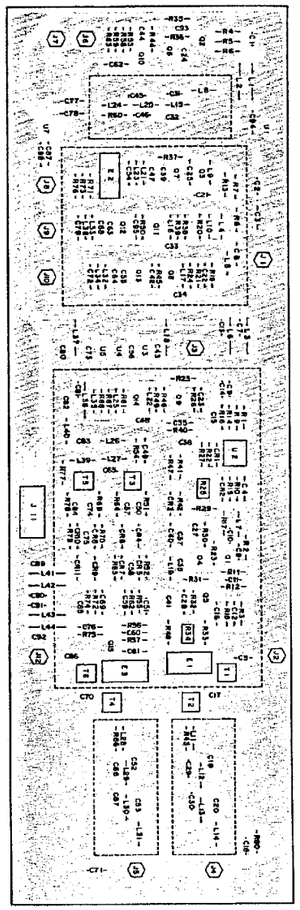

Figure 8-96. A12 Modulator Board Assembly Component Locations.

A12 MODULATOR (P/N 04192-66512)

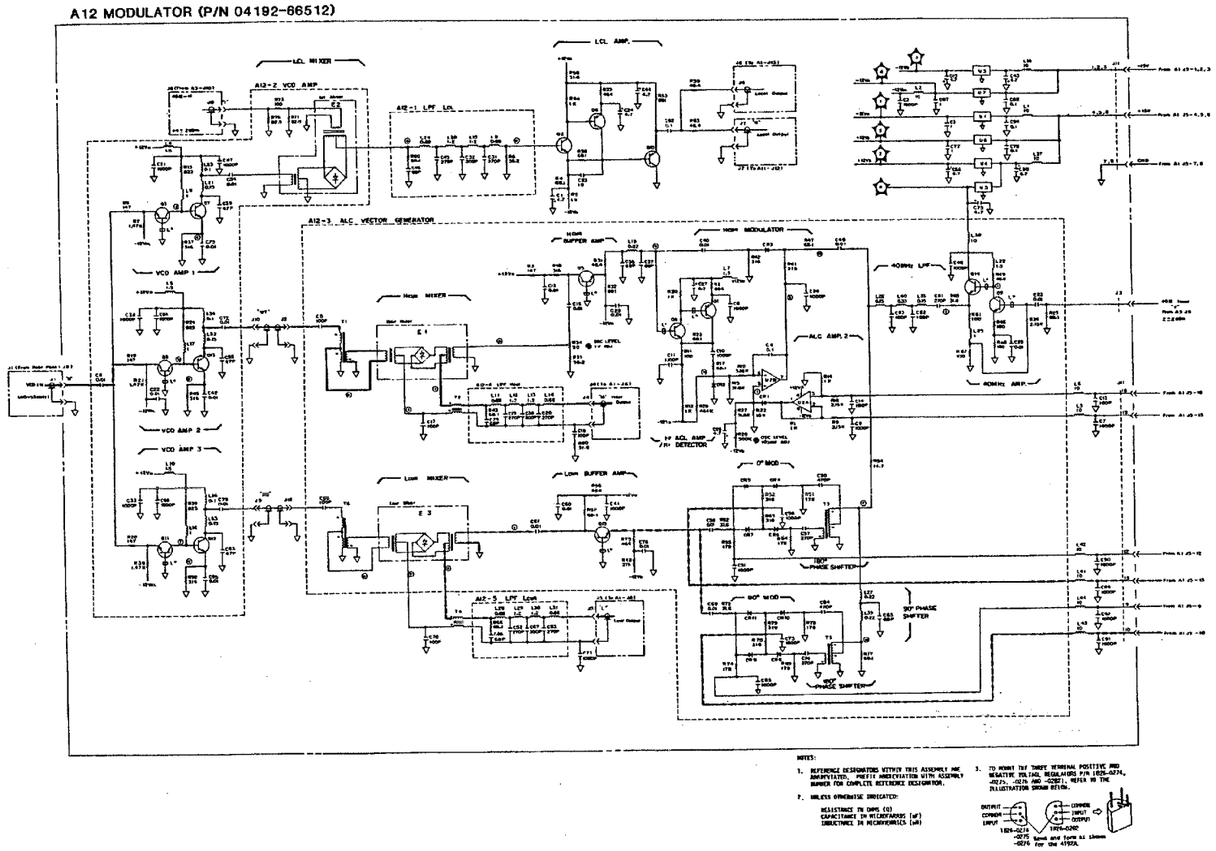

Figure 8-97. A12 Modulator Board Assembly Schematic Diagram.

# REGIONAL SALES AND SUPPORT OFFICES

*For more information about Agilent Technologies test and measurement products, applications, services, and for a current sales office listing, visit our web site: http://www.agilent.com/find/tmdir. You can also contact one of the following centers and ask for a test and measurement sales representative.* *11/29/99*

**United States:**
Agilent Technologies
Test and Measurement Call Center
P.O.Box 4026
Englewood, CO 80155-4026
(tel) 1 800 452 4844

**Canada:**
Agilent Technologies Canada Inc.
5150 Spectrum Way
Mississauga, Ontario
L4W 5G1
(tel) 1 877 894 4414

**Europe:**
Agilent Technologies
Test & Measurement
European Marketing Organization
P.O.Box 999
1180 AZ Amstelveen
The Netherlands
(tel) (31 20) 547 9999

**Japan:**
Agilent Technologies Japan Ltd.
Call Center
9-1, Takakura-Cho, Hachioji-Shi,
Tokyo 192-8510, Japan
(tel) (81) 426 56 7832
(fax) (81) 426 56 7840

**Latin America:**
Agilent Technologies
Latin American Region Headquarters
5200 Blue Lagoon Drive, Suite #950
Miami, Florida 33126
U.S.A.
(tel) (305) 267 4245
(fax) (305) 267 4286

**Australia/New Zealand:**
Agilent Technologies Australia Pty Ltd
347 Burwood Highway
Forest Hill, Victoria 3131
(tel) 1-800 629 485 (Australia)
(fax) (61 3) 9272 0749
(tel) 0 800 738 378 (New Zealand)
(fax) (64 4) 802 6881

**Asia Pacific:**
Agilent Technologies
24/F, Cityplaza One, 1111 King's Road,
Taikoo Shing, Hong Kong
(tel) (852)-3197-7777
(fax) (852)-2506-9284